CITY OF BATAVIA
100 N. Island Avenue
Batavia, IL 60510
(630) 454-2000 http://www.cityofbatavia.net

CITY COUNCIL AGENDA
Monday, May 2, 2016
7:30 p.m. – Council Chambers 1st Floor

1. **MEETING CALLED TO ORDER**

2. **INVOCATION Followed By PLEDGE OF ALLEGIANCE**

3. **ROLL CALL**

4. **ITEMS REMOVED/ADDED/CHANGED**

5. **CONSENT AGENDA:**

(The consent agenda is made up of items recommended by city staff or council subcommittees which require approval. This agenda is placed as a separate item on the overall City Council agenda. The items on the consent agenda usually have unanimous committee support and are voted on as a "package" in the interest of saving time on non-controversial issues. However, the Mayor or any council member may, by simple request, remove an item from the consent agenda to have it voted upon separately.)

Accept and Place on File:

A. Committee of the Whole Minutes for April 5, 2016

Approvals:

B. April 22, 2016 Payroll $771,580.68

C. Accounts Payable Check Register $751,233.32

D. **ORDINANCE 16-21:** Declaring Surplus Property (Scott Haines 4/6/16 COW 4/26/16 13/0) CS

E. **RESOLUTION 16-40-R:** Requesting Permit from IDOT for Road Closures for 2016 Farmer's Market (Gary Holm 4/6/16 COW 4/26/16 13/0) CS

F. **RESOLUTION 16-43-R:** Requesting Permit from IDOT for Road Closures for 2016 Triathlon (Gary Holm 4/12/16 COW 4/26/16 13/0) CS

G. **RESOLUTION 16-35-R:** A Resolution Approving IGA for Animal Control Services with Kane County (Gary Schira 4/12/16 COW 4/26/16 13/0) GS

Documents: COW 16-04-05M.pdf, Ord 16-21 Surplus Property.pdf, Res 16-40-R IDOT Permit Farmers Market Road Closures.pdf, Res 16-43-R IDOT Permit Triathlon Road Closures.pdf, Res 16-35-R Approving IGA for Animal Control Services.pdf

6. **MATTERS FROM THE PUBLIC: (For Items NOT On The Agenda)**

7. **CHAMBER OF COMMERCE**

8. **RESOLUTION 16-44-R: Authorizing Execution Of A Contract For The Execution Of A Contract With Geneva Construction Company Of Aurora, Illinois For The Wilson Street Sidewalk Construction Project In The Amount Of $41,000.00 (Tim Grimm 4/20/16 COW 4/26/16 13/0) CS**

Documents: Res 16-44-R Wilson St Sidewalk w Exhibit 1.pdf

9. **RESOLUTION 16-45-R: Authorizing The Execution Of A Contract With Ehlers, Inc. For Economic Development Consulting Services: Reviewing Developer's Proposal And Request For Financial Assistance, In The Amount Of $12,500.00 (Chris Aiston 4/21/16 COW 4/26/16 14/0) GS**

   Documents: RES 16-45-R Authorize Exec Contract Econ Development Consulting Services.pdf

10. **ADMINISTRATOR'S REPORT**

11. **COMMITTEE REPORTS**

12. **OTHER BUSINESS**

13. **MAYOR'S REPORT**

14. **CLOSED SESSION:**
    a. Acquisition of Real Property
    b. Personnel

15. **ADJOURNMENT**

Individuals with disabilities should notify the City Administrator's office at 630-454-2053 if they have a disability which will require special assistance or services and, if so, what services are required. This notification should occur as far as possible before the City-sponsored function, program, or meeting.

MINUTES
April 5, 2016
Committee of the Whole
City of Batavia

Please **NOTE:** These minutes are not a word-for-word transcription of the statements made at the meeting, nor intended to be a comprehensive review of all discussions. They are intended to make an official record of the actions taken by the Committee/City Council, and to include some description of discussion points as understood by the minute-taker. They may not reference some of the individual attendee's comments, nor the complete comments if referenced.

Chair Brown called the meeting to order at 7:30pm.

1. Roll Call

Members Present: **Chair Brown; Ald. Russotto, Atac, Stark, Wolff, Fischer, O'Brien, Callahan, Mueller, Botterman, Cerone (entered at 7:59pm); and McFadden**

Members Absent: **Aldermen Hohmann and Chanzit**

Also Present: **Mayor Schielke (entered at 7:51pm); Chief Deicke, Batavia Fire Department; Ed Jancauskas, Deputy Fire Chief, Batavia Fire Department; Bill McGrath, City Administrator; Wendy Bednarek, Director of Human Resources; Rahat Bari, City Engineer; Drew Rackow, Planner; Andrea Podraza, Senior Civil Engineer; Joel Strassman, Planning and Zoning Officer; Gary Holm, Director of Public Works, Scott Buening, Director of Community Development; and Jennifer Austin-Smith, Recording Secretary**

2. Approve Minutes for November 5, 2015, January 26, February 23, March 8, March 15 and March 22, 2016

Motion: To approve minutes for November 5, 2015, January 26, February 23, March 8, March 15 and March 22, 2016
Maker: Mueller
Second: McFadden
Voice Vote: 11 Ayes, 0 Nays, 3 Absent
Motion carried.

3. Items to be Removed/Added/Changed
There were no items to be removed, added or changed.

4. Matters From The Public (For Items NOT on Agenda)
There were no matters from the public for items not on the agenda at this time.

5. Consent Agenda
(The Consent Agenda is made up of items recommended by city staff that requires recommendation to the full City Council by the JCOW. This agenda is placed as a separate item on the JCOW agenda. The items on the Consent Agenda are usually

minor items, already budgeted, standard non-policy activities or outgrowths of earlier meetings and are voted on as a "package" in the interest of saving time on non-controversial issues. However, any council member may, by simple request, have an item removed and placed on the "regular" agenda.)

a. Resolution 16-34-R: Authorizing Execution of an intergovernmental Agreement with Illinois Department of Transportation for Routine Maintenance of Certain State Routes (Gary Holm 3/23/16) CS

Motion: To approve the consent agenda as presented
Maker: Mueller
Second: McFadden
Voice Vote: 11 Ayes, 0 Nays, 3 Absent
Motion carried.

6. Ordinance 16-16: Conditional Use Permit for a Massage Establishment, 11 East Wilson Street, Yune Zhou, Sunshine Massage, Applicant

Strassman reported on his memo. By a vote of 4-0, the Plan Commission (PC) approved the findings and recommended approval of the Conditional Use. Staff recommends the COW recommend approval of Ordinance 16-16 as presented.

Callahan commented that other cities are experiencing licensing problems and asked how the City would prevent the same from happening in Batavia. Strassman stated that licensing is regulated by the state and staff would investigate if there were any concerns brought to their attention. Stark commented that the Conditional Uses are allowing businesses in the downtown that several residents do not approve of as well as not generating sufficient sales tax.

Motion: To approve Ordinance 16-16: Conditional Use Permit for a Massage Establishment, 11 East Wilson Street, Yune Zhou, Sunshine Massage, Applicant
Maker: Wolff
Second: Botterman
Voice Vote: 10 Ayes, 1 Nays, 3 Absent
Motion carried.

McFadden was the nay vote.

7. Ordinance 16-17: Amending the Official Zoning Map – 500 & 501Wind Energy Pass, 502 & 503 Pottawatomie Trail and 427 Ridgelawn Trail. City of Batavia, Applicant (3/21/16) CD

Buening reported that the PC held a Public Hearing on March 16th to review a proposed Zoning Map amendment for several existing stormwater management parcels along Hart Road and one on Ridgelawn Trail. Ordinance 16-17 amends the Official Zoning Map designation for properties from R0, Single Family Residential, to POS, Parks and Open Space District.

Motion: To approve Ordinance 16-17: Amending the Official Zoning Map – 500 & 501Wind Energy Pass, 502 & 503 Pottawatomie Trail and 427 Ridgelawn Trail. City of Batavia, Applicant

Maker: Wolff
Second: Fischer
Voice Vote: 11 Ayes, 0 Nays, 3 Absent
Motion carried.
CONSENT AGENDA

8. Ordinance 16-18: Amending the Text of the Zoning Code (DMR 3/31/16) CD

Rackow reported that on March 16, 2016, the PC reviewed a series of amendments to eight chapters of the Zoning Code. These amendments would address a number of items that have been the subject of variances in commercial development projects over the past six years. Other revisions address matters that have arisen in discussions with potential developers, or have been identified by staff for addition to the Code. The intent of many of these revisions is to increase code flexibility and remove items that could return as variance requests. The PC suggested clarifications of language for signage requirements for Electric Vehicle parking, but recommended no further changes. Overall, the Commission agreed that the proposed revisions effectively address matters that may return in future variance requests. The PC recommended that the proposed amendments be forwarded to the COW for approval.

The Committee discussed the proposed changes with staff. Callahan commented that he likes the changes to make things more business friendly.

Motion: To approve Ordinance 16-18: Amending the Text of the Zoning Code
Maker: Brown
Second: Atac
Voice Vote: 12 Ayes, 0 Nays, 2 Absent
Motion carried.
CONSENT AGENDA

9. Approval of the Purchase of a Replacement Staff Vehicle (RD 3/29/16) CS

Jancauskas reported that the Fire Department is requesting authorization to purchase one 2016 Ford Explorer Utility AWD Vehicle to replace a 1999 command car. This purchase was approved in the 2016 Fire Department Budget. The Fire Department is requesting this purchase be made through the Northwest Municipal Conference Suburban Purchasing Cooperative (SPC). The SPC has awarded the contract for the Ford Utility vehicle to Currie Motors Fleet in Frankfort, Illinois. The cost for the Ford Utility Vehicle is $28,113.00. This purchase is under budget.

Wolff asked what would become of the 1999 command car. Jancauskas answered that it would be transferred to ESDA for their use.

Motion: To approve the purchase of a Replacement Staff Vehicle
Maker: Brown
Second: McFadden
Voice Vote: 12 Ayes, 0 Nays, 2 Absent
Motion carried.
CONSENT AGENDA

10. Resolution 16-32-R: Authorizing Execution of the Contract for Ward 1 Drainage Investigation with WBK Engineering, LLC for an Amount not-to exceed $24,472.37 (AMP 3/30/16) CS

Podraza reported that this is the first project out of the $400,000 allocated in the 2016 budget to investigate/study, prepare design drawings and/or construct solutions on a city-wide basis to help alleviate the drainage and sewer back-ups problems encountered most recently with the June 2015 rain event. Staff is in the process of preparing the second request for qualifications for the next area to be looked into further, Area 3 of the combined sewers, in the proximity of Blaine, Morton & Walnut Streets.

O'Brien asserted that Area 3 should be on the top of the list. However, the Mahoney Tributary has had major damage. That area was hit hard and it needs to be addressed. Podraza stated that the area O'Brien discussed is high on the list but money is an issue. O'Brien stated that he would like the City to keep the First Ward in mind when considering drainage concerns.

The Committee discussed the ranking process of contractors. Bari explained that the process was used in his prior office in Naperville and is in compliance with government regulations.

Motion: To approve Resolution 16-32-R: Authorizing Execution of the Contract for Ward 1 Drainage Investigation with WBK Engineering, LLC for an Amount not-to exceed $24,472.37
Maker: Fischer
Second: McFadden
Voice Vote: 12 Ayes, 0 Nays, 2 Absent
Motion carried.

11. Resolution 16-37-R: Authorize Execution of an Easement Agreement for Riverbank Erosion Investigation (WRM 3/31/16) GS

Bari reported as part of the investigation into the erosion occurring at several places along the riverbank, we need to obtain an easement from some private landowners adjacent to the river in certain areas. The owners of the strip center at 33 N Island Avenue are such owners, and they have agreed to give the City an easement. Additional agreements will be required when the actual construction goes ahead, but the owners wanted to wait until they saw the options presented.

Motion: To approve Resolution 16-37-R: Authorize Execution of an Easement Agreement for Riverbank Erosion Investigation
Maker: O'Brien
Second: Callahan
Voice Vote: 12 Ayes, 0 Nays, 2 Absent
Motion carried.

12. Resolution 16-36-R: Budget Amendment for the Purchase of Software (Peggy Colby 3/3/16)

Colby reported that staff is manually entering the liquor taxes and it has become cumbersome and inefficient. She is requesting the purchase of a software program that would become part of utility billing software. Several of the taxpayers want to pay their taxes online as that is how the State of Illinois tax files are facilitated. This module would allow the people to file and pay taxes online. Colby stated that the software would pay for itself and it is a one-time investment but there is a monthly balance of $3,600 for IT support.

Cerone asked if this program could support other types of taxes. Colby answered that this program could manage any kind of tax. Cerone asked about the monthly IT charge. Colby answered that the charge is common with these types of programs. The IT support would include performing updates and maintenance on the program.

Motion: To approve Resolution 16-36-R: Budget Amendment for the Purchase of Software
Maker: Stark
Second: McFadden
Voice Vote: 12 Ayes, 0 Nays, 2 Absent
Motion carried.
CONSENT AGENDA

13. Project Status – Fox River Issues CD

There was no project status at this time.

14. Other

There were no others at this time.

15. Closed Session

a. Purchase of Real Property
b. Purchase and Sale of Electric Power
c. Discussion: Appointment and/or Employment of Specific Individuals

Purchase of Real Property and Purchase and Sale of Electric Power were removed from closed session.

Motion: To enter into closed session for the purpose of discussion of appointment and/or employment of specific individuals
Maker: O'Brien
Second: Callahan
Voice Vote: 12 Ayes, 0 Nays, 2 Absent
Motion carried.

Closed Session began at 8:41pm.

16. Adjournment

There being no other business to discuss, Brown asked for a motion to adjourn the meeting at 9:20pm; Made by O'Brien; Seconded by Callahan. Motion carried.

Minutes respectfully submitted by Jennifer Austin-Smith

CITY OF BATAVIA

DATE: April 6, 2016
TO: Committee of the Whole – City Services
FROM: Scott A. Haines, Street Superintendent
SUBJECT: Ordinance 16-21 Declaring Surplus Property

Staff recommends that the following vehicles be declared surplus property and authorization be given for staff to sell or auction them:

- Truck #3722 – 1997 International 4900 Dump Truck
  VIN: 1HTSDAAN8VH441688
- Truck #3776 – 1998 Chevrolet K3500 Dump Truck
  VIN: 1HTSLAAL4YH306567

Recommended Committee/Council Action

Recommend the approval of Ordinance 16-21 declaring above vehicles to be surplus property and authorizing staff to sell or auction them.

CITY OF BATAVIA, ILLINOIS
ORDINANCE 16-21

AN ORDINANCE DECLARING CERTAIN PROPERTY TO BE SURPLUS AND AUTHORIZING SALE THEREOF

ADOPTED BY THE
MAYOR AND CITY COUNCIL
THIS 2ND DAY OF MAY, 2016

Published in pamphlet form
by authority of the Mayor
and City Council of the City of Batavia,
Kane & DuPage Counties, Illinois,
This 18th day of April, 2016

Prepared by and mail to:

City of Batavia
100 N. Island Ave.
Batavia, IL 60510

CITY OF BATAVIA, ILLINOIS
ORDINANCE 16-21

AN ORDINANCE DECLARING CERTAIN PROPERTY TO BE SURPLUS AND AUTHORIZING SALE THEREOF

WHEREAS, in the opinion of the corporate authorities of the City of Batavia, it is no longer necessary or useful to or for the best interest of the City to retain the following described property:

- Truck #3722 – 1997 International 4900 Dump Truck
  VIN: 1HTSDAAN8VH441688
- Truck #3776 – 1998 Chevrolet K3500 Dump Truck
  VIN: 1HTSLAAL4YH306567

NOW, THEREFORE, BE IT ORDAINED by the Mayor and City Council of the City of Batavia, Kane and DuPage Counties, Illinois as follows:

SECTION 1: Pursuant to Section 11-76-4 of the Illinois Municipal Code, the City Council finds that the following described personal property:

- Truck #3722 – 1997 International 4900 Dump Truck
  VIN: 1HTSDAAN8VH441688
- Truck #3776 – 1998 Chevrolet K3500 Dump Truck
  VIN: 1HTSLAAL4YH306567

is currently owned by the City, is no longer necessary or useful to the City of Batavia and the best interest of the City will be served by its sale.

SECTION 2: Pursuant to Section 11-76-4, the City of Batavia Public Works Department is hereby authorized and directed to sell said above described property.

SECTION 3: This Ordinance shall be in full force and effect from and after its passage and approval in the manner provided by law:

PRESENTED to and **PASSED** by the City Council of the City of Batavia, Illinois, this 2nd day of May, 2016.

APPROVED by me as Mayor of said City of Batavia, Illinois, this 2nd day of May, 2016.

_____
Jeffery D. Schielke, Mayor

ATTEST:

_____
Heidi Wetzel, City Clerk

COUNCIL VOTE:

Ward	Aldermen	Ayes	Nays	Absent	Abstain	Aldermen	Ayes	Nays	Absent	Abstain
1	O'Brien					Fischer				
2	Callahan					Wolff				
3	Hohmann					Chanzit				
4	Mueller					Stark				
5	Botterman					Thelin Atac				
6	Cerone					Russotto				
7	McFadden					Brown				
Mayor Schielke										

VOTE:_____ Ayes _____ Nays _____ Absent _____ Abstention(s) counted as _____

Total holding office: Mayor and 14 aldermen

CITY OF BATAVIA

DATE: April 6, 2016
TO: Committee of the Whole – City Services
FROM: Gary Holm
SUBJECT: Resolution 16-40-R Requesting a Permit From IDOT for the Closure of Various Roadways for 2016 Farmer's Market Special Event

The Illinois Department of Transportation requires that a permit be obtained whenever one of their routes needs to be closed (or partially closed) to accommodate a special event.

The attached resolution is required as part of IDOT's permitting process. The resolution outlines various event dates and the associated affected roadways.

We recommend approval of Resolution 16-40-R.

CITY OF BATAVIA
RESOLUTION 16-40-R

A RESOLUTION TO SEEK A PERMIT FROM I.D.O.T. TO CLOSE N. RIVER STREET, A LOCAL ROAD WITHIN A STATE SIGNALIZED INTERSECTION, FOR THE DATES/TIMES SPECIFIED FOR A FARMER'S MARKET

WHEREAS, the City of Batavia is sponsoring a Farmer's Market in the City of Batavia on June 4, 11, 18, 25, July 2, 9, 16, 23, 30, August 6, 13, 20, 27, September 3, 10, 17, 24, October 1, 8, 15, 22; and

WHEREAS, although the Farmer's Market is not physically located on State Route 25, this Farmer's Market will require the temporary closure of River Street, between Wilson Street and Spring Street, thus limiting access to River Street from State Route 25 at Wilson Street, running through the City of Batavia; and

WHEREAS, Section 4-408 of the Illinois Highway Code authorizes the Department of Transportation to issue permits to local authorities to temporarily close portions of State highways for such public purposes; and

NOW, THEREFORE, BE IT RESOLVED by the Mayor and City Council of the City of Batavia as follows:

1. That permission to close River Street, between Wilson Street and State Street for the period from 7:00 A.M. to 1:00 P.M., on the Saturdays of June 4, 11, 18, 25, July 2, 9, 16, 23, 30, August 6, 13, 20, 27, September 3, 10, 17, 24, October 1, 8, 15, 22; is requested of the Illinois Department of Transportation.

BE IT FURTHER RESOLVED that if such permission is granted by the Department of Transportation, all highway traffic on Rt. 25 during the periods of time specified for the Farmer's Market, will not be stopped on said Rt. 25, but will only be unable to turn from Rt. 25 onto North River Street for the time periods described herein, and that thereafter traffic will be allowed to proceed.

BE IT FURTHER RESOLVED that if such permission is granted by the Department of Transportation, the City of Batavia assumes full responsibility for the direction, protection, and regulation of the traffic during the times the detour is in effect, and all liabilities for damages of any kind occasioned by the closing of the State highway, and it is further agreed that efficient all-weather detours shall be maintained to the satisfaction of the Department of Transportation, and conspicuously marked for the benefit of traffic diverted from the State highway. Detour marking shall conform to the requirements of the Manual of Uniform Traffic Control Devices.

BE IT FURTHER RESOLVED that a copy of this resolution be forwarded to the Department of Transportation to serve as a formal request for the permissions sought in this resolution.

PRESENTED to the City Council of the City of Batavia, Illinois, on the 2nd day of May, 2016.

PASSED by the City Council of the City of Batavia, Illinois, on the 2nd day of May, 2016.

APPROVED by me as Mayor of said City of Batavia, Illinois, on the 2nd day of May, 2016.

_____
Mayor

Ward	Aldermen	Ayes	Nays	Absent	Abstain	Aldermen	Ayes	Nays	Absent	Abstain
1	O'Brien					Fischer				
2	Callahan					Wolff				
3	Hohmann					Chanzit				
4	Mueller					Stark				
5	Botterman					Thelin Atac				
6	Cerone					Russotto				
7	McFadden					Brown				
Mayor Schielke										

VOTE: Ayes 0 Nays Absent 0 Abstention(s) counted as _____
Total holding office: Mayor and 14 aldermen

ATTEST:

_____
Heidi Wetzel, City Clerk

CITY OF BATAVIA

DATE: April 12, 2016
TO: Committee of the Whole – City Services
FROM: Gary Holm
SUBJECT: Resolution 16-43-R Requesting a Permit From IDOT for the Closure of Various Roadways for 2016 Triathlon Special Event

The Illinois Department of Transportation requires that a permit be obtained whenever one of their routes needs to be closed (or partially closed) to accommodate a special event.

The attached resolution is required as part of IDOT's permitting process. The resolution outlines various event dates and the associated affected roadways.

We recommend approval of Resolution 16-43-R.

CITY OF BATAVIA
RESOLUTION 16-43-R

A RESOLUTION TO SEEK A PERMIT FROM I.D.O.T. TO CLOSE STATE ROUTE 31, FOR THE DATE/TIME SPECIFIED FOR A TRIATHLON

WHEREAS, the City of Batavia is sponsoring a Triathlon event in the City of Batavia on June 12, 2016; and

WHEREAS, this Triathlon will require the temporary closure of State Route 31 at Main Street, running through the City of Batavia; and

WHEREAS, Section 4-408 of the Illinois Highway Code authorizes the Department of Transportation to issue permits to local authorities to temporarily close portions of State highways for such public purposes; and

NOW, THEREFORE, BE IT RESOLVED by the Mayor and City Council of the City of Batavia as follows:

1. That permission to close Route 31 for the period from 7:00 A.M. to 10:00 A.M., Sunday, June 12, 2016, is requested of the Illinois Department of Transportation.

BE IT FURTHER RESOLVED that if such permission is granted by the Department of Transportation, all highway traffic during the periods of time specified for the Triathlon on June 12, 2016, will be stopped for only short periods of time to allow race participants to cross Rt. 31, thereafter traffic will be allowed to proceed.

BE IT FURTHER RESOLVED that if such permission is granted by the Department of Transportation, the City of Batavia assumes full responsibility for the direction, protection, and regulation of the traffic during the times the detour is in effect, and all liabilities for damages of any kind occasioned by the closing of the State highway, and it is further agreed that efficient all-weather detours shall be maintained to the satisfaction of the Department of Transportation, and conspicuously marked for the benefit of traffic diverted from the State highway. Detour marking shall conform to the requirements of the Manual of Uniform Traffic Control Devices.

BE IT FURTHER RESOLVED that a copy of this resolution be forwarded to the Department of Transportation to serve as a formal request for the permissions sought in this resolution.

PRESENTED to the City Council of the City of Batavia, Illinois, on the 2nd day of May, 2016.

PASSED by the City Council of the City of Batavia, Illinois, on the 2nd day of May, 2016.

APPROVED by me as Mayor of said City of Batavia, Illinois, on the 2nd day of May, 2016.

_____
Mayor

Ward	Aldermen	Ayes	Nays	Absent	Abstain	Aldermen	Ayes	Nays	Absent	Abstain
1	O'Brien					Fischer				
2	Callahan					Wolff				
3	Hohmann					Chanzit				
4	Mueller					Stark				
5	Botterman					Thelin Atac				
6	Cerone					Russotto				
7	McFadden					Brown				
Mayor Schielke										

VOTE: Ayes 0 Nays Absent 0 Abstention(s) counted as _____
Total holding office: Mayor and 12 aldermen

ATTEST:

_____
Heidi Wetzel, City Clerk

CITY OF BATAVIA

MEMO TO: Committee of the Whole
Government Services

FROM: Gary J. Schira
Chief of Police

DATE: April 12, 2016

SUBJECT: Resolution 16-35-R: A Resolution Approving An Intergovernmental Agreement for Animal Control Services Between the City of Batavia and Kane County

Summary

The Police Department is requesting the Mayor and City Clerk to authorize an Intergovernmental Agreement (IGA) for Animal Control Services with Kane County. This IGA includes two (2) one-year options to renew.

Background

This is an on-going contract originally entered into on April 21, 2008. Changes to the contract are highlighted. It should be noted that there is a slight reduction in some of the service fees. A major change to the contract is the addition of specified pick up hours. Animal pick-ups shall be between the hours of 7:00 a.m. and 7:59 p.m. A service fee of $150.00, on top of any other fees, will be assessed for any "after hours" pick-ups between the hours of 8:00 p.m. and 6:59 a.m.

Staff Recommendation:

To approve Resolution 16-35-R: A Resolution Approving An Intergovernmental Agreement for Animal Control Services Between the City of Batavia and Kane County.

Recommended Committee Action:

To motion to City Council to approve Resolution 16-35-R: A Resolution Approving An Intergovernmental Agreement for Animal Control Services Between the City of Batavia and Kane County at the Tuesday, April 19, 2016 COW Meeting.

Required Action by City Council:

To approve Resolution 16-35-R: A Resolution Approving An Intergovernmental Agreement for Animal Control Services Between the City of Batavia and Kane County at the Monday, May 2, 2016 City Council Meeting.

Atts.

Copy (w/atts) to: Mayor Schielke
W. McGrath
D/C Autenrieth
D/C Eul

CITY OF BATAVIA, ILLINOIS
RESOLUTION 16-35-R

A RESOLUTION APPROVING AN INTERGOVERNMENTAL AGREEMENT WITH KANE COUNTY REGARDING ANIMAL CONTROL SERVICES

WHEREAS, pursuant to Article VII Section 10 of the Constitution of the State of Illinois and Section 3 of the Illinois Intergovernmental Cooperation Act, 5 ILCS 220/3 (2006), units of local government are authorized and empowered to enter into agreements to obtain and share services and to exercise jointly or transfer any powers or functions not prohibited by law; and

WHEREAS, Kane County pursuant to the Animal Control Act, 510 ILCS 5/1 et seq. (the "Act") has certain rights, duties and obligations with respect to rabies control and registration of dogs and cats on a county-wide basis, and also has primary responsibility for animal control activities within unincorporated Kane County; and

WHEREAS, the Municipality has the right, but not the obligation to control animal activities in its corporate limits, and has historically taken the primary responsibility for animal control activities within its corporate limits and desires to contract with the County to discharge these responsibilities; and

WHEREAS, pursuant to Kane County Board Ordinance 07-254, passed July 10, 2007, Kane County is ready, willing and able to contract with the municipalities of Kane County to provide them with animal control services, including but not limited to pick-up of animals running at large, sick or injured dogs and small, wild mammals such as skunks, raccoons, and bats and providing housing and adoption services for animals in its custody to the best of its ability; and

WHEREAS, the parties have a mutual interest in long term planning for animal control services in Kane County and intend to participate in such planning activities to be convened by the Metro West Council of Government, but desire to enter into an agreement for services while such planning is ongoing; and

WHEREAS, the City of Batavia and Kane County have negotiated an agreement relating to animal control services which the City Council of the City of Batavia finds to be in the best interest of the Community, such agreement attached hereto as **EXHIBIT 1**;

NOW, THEREFORE, BE IT RESOLVED by the City of Batavia, as follows:

THAT the Mayor is authorized to execute the intergovernmental agreement between the City of Batavia and Kane County, a copy of which is attached hereto as Exhibit 1.

PRESENTED to and **PASSED** by the City Council of the City of Batavia, Illinois, this **2nd** day of **May, 2016**.

APPROVED by me as Mayor of said City of Batavia, Illinois, this **2nd** day of **May, 2016**.

Jeffery D. Schielke, Mayor

Ward	Aldermen	Ayes	Nays	Absent	Abstain	Aldermen	Ayes	Nays	Absent	Abstain
1	Fischer					O'Brien				
2	Callahan					Wolff				
3	Chanzit					Hohmann				
4	Stark					Mueller				
5	Botterman					Thelin-Atac				
6	Cerone					Russotto				
7	McFadden					Brown				
Mayor Schielke										

VOTE: Ayes Nays Absent Abstentions
Total holding office: Mayor and 14 aldermen

ATTEST:

Heidi Wetzel, City Clerk

Exhibit 1

AGREEMENT FOR ANIMAL CONTROL SERVICES

THIS INTERGOVERNMENTAL AGREEMENT ("Agreement") is made and entered into this _____ day of _____, 2016 by and between the **COUNTY OF KANE**, a body politic and corporate, and the **CITY OF BATAVIA**, an Illinois municipal corporation.

WHEREAS, the County of Kane ("Kane County") is a body politic and corporate duly organized and existing under the Constitution and laws of the State of Illinois; and

WHEREAS, the city of Batavia ("Municipality") is an Illinois municipal corporation; and

WHEREAS, Kane County pursuant to the Animal Control Act, 510 ILCS 5/1 et seq. (the "Act") has certain rights, duties and obligations with respect to rabies control and registrations of dogs and cats on a county-wide basis, and also has primary responsibility for animal control activities within unincorporated Kane County; and

WHEREAS, the Municipality has the right, but not the obligation to control animal activities in its corporate limits, and has historically taken the primary responsibility for animal control activities within its corporate limits and desires to contract with the County to discharge these responsibilities; and

WHEREAS, pursuant to Kane County Board Ordinance 07-254, passed July 10, 2007, Kane County is ready, willing and able to contract with the municipalities of Kane County to provide them with animal control services, including but not limited to pick-up of animals running at large, sick or injured dogs and small, wild mammals such as skunks, raccoons, and bats and providing housing and adoption services for animals in its custody to the best of its ability at Kane County Animal Control, located at 4060 Keslinger Road, Geneva, IL, (the "Facility") the Kane County; and

WHEREAS, the parties have a mutual interest in long term planning for animal control services in Kane County; and

WHEREAS, pursuant to Article VII Section 10 of the Constitution of the State of Illinois and Section 3 of the Illinois Intergovernmental Cooperation Act, 5 ILCS 220/3, units of local government are authorized and empowered to enter into agreements to obtain and share services and to exercise jointly or transfer any powers or functions not prohibited by law; and

WHEREAS, the Chairman of the Kane County Board has heretofore been authorized pursuant to Resolution to enter into an intergovernmental agreement with the Municipality has herein provided;

NOW, THEREFORE the COUNTY OF KANE and the CITY OF BATAVIA do hereby agree as follows:

Section 1. Incorporation of Recitals. The facts and statements contained in the preamble to this Agreement are hereby incorporated herein as if fully set forth.

Section 2. Pickup Service Provided. The Kane County Animal Control Department will provide pickup service for stray dogs found within the limits of the Municipality, and for pickup of animals from locations where a forcible entry and detainer action results in an eviction conducted by the Kane County Sheriff, and shall transport them to the Facility or another County designated animal shelter for a service fee to be paid to the County as provided in Section 5-49(a) of the Kane County Code.

Section 3. Complaint Calls – Response. The Kane County Animal Control Department will respond to complaint calls, as provided in Section 5-49(a) of the Kane County Code, from the Municipality's police department (or appropriate Municipal offices if no police department exists), for barking dogs, dogs running at large and sick or injured wildlife outside of a building or structure within the limits of the Municipality and shall transport them to the Facility or another County designated animal shelter. The service fee to be paid to the County shall be that shown on Exhibit A. Should the Kane County Animal Control Department face unexpected budgeting concerns regarding the services described herein impossible to provide at the fees described herein, upon formal written notice by Kane County Animal Control Administrator, the parties may renegotiate the financial terms of this Agreement. If the parties are unable to reach an agreement as to such renegotiation, any party may cancel this Agreement upon 30 days' written notice.

Section 4. Vicious or Dangerous Dogs. The Kane County Animal Control Department shall cooperate with the police department of the Municipality in responding to complaints relating to vicious or dangerous dogs. All complaints and proceedings shall be handled as provided in Sections 15 and 15.2 of the Act.

Section 5. Invoices for Services. Kane County shall invoice the Municipality for services provided at the end of each month and the Municipality shall remit payment to Kane County in full within thirty (30) days. The County invoice shall, at a minimum, specify the dates of service, particulars regarding the animal serviced and the types of services rendered. The County shall retain the right to limit, suspend, or terminate services to the Municipality if it shall omit to pay any fees within sixty (60) days of receipt of the County's invoice therefore. All fees for services shall be deposited by the County as set forth in Resolution 06-330.

Section 6. Termination of prior Agreements; Waiver of Fees. Upon the effective date of this Agreement, any and all prior agreements between Kane County and the Municipality are hereby terminated and abrogated.

Section 7. Fees and Charges to Individual Owners. Nothing in this Agreement shall be construed to limit the right of Kane County or the municipality to increase or impose any fees or charges to individual owners as permitted or provided by law.

Section 8. Effective Date; Termination. This Agreement shall commence upon the affixing of the last signature of any officer required to sign this Agreement, which date shall be deemed the "Effective Date." This Agreement shall remain in full force and in effect until the first anniversary of the Effective Date, with two (2) one-year renewal options. The Municipality shall notify the County, in writing, not less than 60 days prior to the expiration date, of its intent to exercise each renewal option.

Section 9. Additional Agreement. The Parties agree to meet to work towards a long term solution to the regional issues of animal control. To that end, the County will assist the Municipality cooperatively with Metro West to participate in developing a plan to meet specific anticipated demand for animal control services due to municipal growth. Failure by the Municipality to participate in good faith in said meetings shall be a breach of the terms of this agreement by the Municipality.

Section 10. Service Provision Subject to Shelter Capacity.

The County shall reserve 30% of the animal shelter capacity for the exclusive use of the County for provision of services to residents of unincorporated Kane County and for its use for provision of County-wide animal bite investigation services. If, at any time, in the opinion of the Kane County Animal Control Administrator, animals in the shelter from the Municipality and other municipal contract-holders constitute more than 60% but less than 70% of total shelter capacity, the Administrator shall notify the Municipality as provided for in Section 12 of this Agreement, if at that time, in the opinion of the Kane County Animal Control Administrator, animals in the shelter from the Municipality and other municipal contract-holders has reached 70% of the total shelter capacity, the Administrator shall notify the Municipality that Animal Control services for new additional animals are being suspended and for what time period they shall be suspended to the Municipality and to all other municipal contract-holders. In the event of service suspension, the County shall work with the Municipality to identify and obtain animal control services from other service providers in the geographic area, but it shall be the sole responsibility of the Municipality to secure such services for its residents during the service suspension period, and the County shall have no obligation, responsibility or liability to the Municipality for animal control services except as provided by other applicable law. Animal Control services shall be reinstated when the Animal Control Administrator determines that the unused shelter capacity has exceeded 30% for two consecutive weeks.

Section 11. Indemnification. The Municipality shall indemnify, defend and hold harmless Kane County and its officers, agents and employees of any from any and all claims, demands, suits at law or in equity, of any kind and manner, which in any way occur or arise in connection with Kane County's services or facilities provided pursuant to this Agreement, except as to claims of negligence, intentional, willful or wanton acts committed by the County and its officers, agents and employees and/or to the extent prohibited by law or public policy. In the event of a claim being made by the County under this Section, the County shall be entitled to be defended by counsel of its own choosing, and the Municipality shall pay any reasonable attorney's fees and expenses incurred by the County in connection therewith.

Section 12. Notices. Any notices permitted or required to be given under this Agreement shall be deemed given if sent by certified mail, return receipt requested, or by personal delivery to the person to who it is addressed, to the following:

If to Kane County:

County of Kane

Kane County Government Center

719 South Batavia Avenue – Building A – 2nd Floor

Geneva, IL 60134

Attention: County Board Chairman

With a copy to:

Animal Control Administrator

County of Kane

4060 Keslinger Road

Geneva, IL 60134

With a copy to:

States Attorney, Chief of the Civil Division

100 South Third Street, 4th Floor

Geneva, IL 60134

If to the Municipality:

City Administrator

City of Batavia

100 North Island Avenue

Batavia, IL 60510

until notice of change of address is given in the manner provided. Notice by fax transmission or email communication shall not be sufficient unless required by an applicable statute.

Section 13. Severability. If any provision, clause or section of this Agreement shall be ruled or held invalid by any Court of competent jurisdiction, then and in such event such finding of invalidity shall not affect the remaining provisions of this Agreement which can be given effect without such invalid provisions and to that end to provisions of this Agreement are Severable.

Section 14. Entire Agreement of Parties. This Agreement, and any other ordinances or resolutions incorporated herein by reference or by operation of law, constitutes the entire agreement of the parties and no modifications by course or conduct or oral agreement shall be valid unless reduced to writing and duly adopted by the Kane County Board and the Municipality.

Section 15. Binding Effect; Successors' Assignment. This Agreement shall be binding upon the respective parties hereto, and their lawful successors in interest, except that Kane County shall not assign performance of this Agreement to another unit of local government without the written consent of the Municipality.

WHEREFORE, the parties have caused this Agreement to be signed as of the date and year first above written.

COUNTY OF KANE

By: _____
Christopher Lauzen
County Board Chairman

ATTEST: _____
John A. Cunningham
Kane County Clerk

CITY OF BATAVIA

By: _____
Jeffery D. Schielke
Mayor

ATTEST: _____
City Clerk

EXHIBIT A - KANE COUNTY FEE SCHEDULE FOR MUNICIPALITY

Service	Fee
Pick up per animal *(7:00 am - 7:59pm)*	**$ 20.00**
Pick up charge group of small animals, evictions only	**$ 25.00**
Boarding per animal/per day/Maximum charge $70	$ 10.00
Vaccination for distemper per animal	**$ 10.00**
Euthanasia per dog/cat animal ≤ 30 pounds	$ 30.00
Euthanasia per dog/cat animal > 30 pounds	$ 50.00
Rabies observation (includes euthanasia fee) ≤ 30 pounds	$ 150.00
Rabies observation (includes euthanasia fee) > 30 pounds	$ 175.00
Specimen pick up	$ 30.00
Specimen prep	$ 50.00
Evicition cost comprise of pickup charges and boarding	**$ 90.00**
After Hours Pick up *(8:00pm - 6:59am)*	**$ 150.00**
Average cost per animal impounded	**$ 100.00**

CITY OF BATAVIA

DATE: April 20, 2016
TO: Committee of the Whole – City Services 4/26
FROM: Timothy Grimm, P.E. Civil Engineer
SUBJECT: **Wilson Street Sidewalk Construction**

Resolution 16-44-R: Authorizing Execution of a Contract with Geneva Construction Company for the Wilson Street Sidewalk Construction Project for $41,000.00 plus 5% contingency amount

Summary

The City has received bids from contractors for the construction of a new public sidewalk on East Wilson Street between Woodland Hills Road and Kirk Road. The sidewalk will be located on the north side of Wilson Street and is the last missing portion between Kirk Road and downtown Batavia. A portion of the cost for this project will be paid for by Community Development Block Grant (CDBG) funding thru Kane County.

Bids for the construction project were publicly opened and read aloud on April 19, 2016 at Public Works.

Background

The City currently has a funding agreement in place with Kane County for this CDBG project in the amount of $55,000, the estimated preliminary construction cost. The proportional share approved by Kane County per the funding agreement is up to $40,000 (73%) and the City's participation is $15,000 (27%).

Proposals

Bid was advertised on March 29, 2016. A total of eleven (11) contractors picked up the bids from the City. Bids were opened for the sidewalk construction on April 19, 2016, with the following results:

Company Name	Bid Amount
Geneva Construction Company	**$41,000.00**
Triggi Construction Company	$60,100.73
Martam Construction, Inc.	$67,393.00
Alliance Contractors, Inc.	$68,963.00
Schroeder and Schroeder, Inc	$73,302.00
Elliot & Wood, Inc.	$80,000.00
Globe Construction, Inc. *	Not Read
Engineer's Estimate	*$57,600*

The lowest bidder for the Wilson Street Sidewalk Construction was Geneva Construction Company, Inc. of Aurora, Illinois. Note * this bid was not read. Acknowledgement of addendum was not received, bid was deemed to be non-responsive.

Staff Recommendation

The City has worked with Geneva Construction on many successful projects in the past and the work has been completed on time and within budget. Staff is recommending approval of the construction contract with Geneva Construction in the amount of $43,050.00 ($41,000 plus 5% contingency). Construction would begin in mid May after contract is signed by the City and approved by the Kane County.

The total project construction costs based on the bids received are as follows:

Total CDBG Funding Participation - $29,930 (73% of construction cost)
Total Estimated City Participation - $11,070.00 (27% of construction cost)

Recommended Committee/Council Action

Recommend the approval of Resolution 16-44-R authorizing execution of a contract for the Wilson Street Sidewalk Construction project with Geneva Construction Company of Aurora, Illinois, for a not-to-exceed amount of $43,050.00 ($41,000 plus 5% contingency).

CITY OF BATAVIA, ILLINOIS
RESOLUTION 16-44-R

A RESOLUTION AUTHORIZING EXECUTION OF A CONTRACT WITH GENEVA CONSTRUCTION COMPANY OF AURORA, ILLINOIS, FOR THE WILSON STREET SIDEWALK CONSTRUCTION PROJECT IN THE AMOUNT OF $43,050.00

WHEREAS, the City of Batavia has identified the need for sidewalk on the north side of Wilson street between Kirk road and Woodland Hills road; and

WHEREAS, the City of Batavia has a Community Development Program funding agreement with Kane County for the construction of a public sidewalk along East Wilson Street between Woodland Hills Road and Kirk Road, with said agreement being in the amount of fifty-five thousand dollars ($55,000); and

WHEREAS, the Community Development Program funding agreement provides that the cost of said construction will be divided 73% (Kane County) and 27% (City of Batavia), as long as the project does not exceed the project estimate or scope. In the case that the project exceeds this amount, the City will be responsible for the dollar amount above and beyond the project estimate;

WHEREAS, the City of Batavia requested bids on the project and reviewed the submitted bids; and

WHEREAS, Geneva Construction Company has submitted a bid for said construction which is the lowest responsible bid; and

WHEREAS, the proposed total cost of said construction is $43,050, which amount is subject to final adjustments and approval by Kane County; and

WHEREAS, the estimated sum (as aforesaid) is subject to adjustments based upon the actual construction costs;

NOW THEREFORE, BE IT RESOLVED BY THE CITY COUNCIL OF THE CITY OF BATAVIA, KANE COUNTY, ILLINOIS, as follows:

SECTION 1: That the Mayor and City Clerk are hereby authorized to execute the contract between the City and Geneva Construction Company for $43,050 which amount is subject to final contract adjustments and approval by Kane County. The Contract Agreement with Geneva Construction is attached hereto as **EXHIBIT 1**.

PRESENTED to and **PASSED** by the City Council of the City of Batavia, Illinois, this 2nd day of May, 2016. **APPROVED** by me as Mayor of said City of Batavia, Illinois, this 2nd day of May, 2016.

_____

Jeffery D. Schielke, Mayor

Ward	Aldermen	Ayes	Nays	Absent	Abstain	Aldermen	Ayes	Nays	Absent	Abstain
1	O'Brien					Fischer				
2	Callahan					Wolff				
3	Hohmann					Chanzit				
4	Mueller					Stark				
5	Botterman					Thelin Atac				
6	Cerone					Russotto				
7	McFadden					Brown				
Mayor Schielke										

VOTE: Ayes Nays Absent Abstentions
Total holding office: Mayor and 14 aldermen

ATTEST:

_____

Heidi Wetzel, City Clerk

EXHIBIT 1

BIDDING DOCUMENTS

FOR

WILSON STREET SIDEWALK CONSTRUCTION

MARCH 2016

Prepared By:

City of Batavia
Public Works and Engineering Division
200 North Raddant Road
Batavia, Illinois 60510

TIMOTHY F. GRIMM
062-059930
LICENSED
PROFESSIONAL
ENGINEER
OF
STATE OF ILLINOIS

Exp. 11/30/2017

This contracting opportunity has been made possible, in part, by the Kane County Board, through its Office of Community Reinvestment with federal funds provided by the U.S. Department of Housing and Urban Development. Section 3 Businesses and Minority/Women-Owned Businesses are encouraged to bid on this project.

TABLE OF CONTENTS

Part I

Invitation to Bid……IB 1 - 2
Instructions to Bidders Table of Contents……ISBTOC 1
Instructions to Bidders……ISB 1 - 5
Federal Prevailing Wage…….....PW 1 - 8
Bid Proposal/Bidding Schedule……..... BP 1 - 2
Bid Schedule……BS 1
Bid Conditions……BC 1 - 5
Contract……...C 1 - 1
Standard Form of Performance Bond…….....PB 1 – 2
Community Development Fund Provisions …….....CDBG 1 - 5
Exhibit A – Labor Federal Standard Labor Provisions……1 - 5
Exhibit B – General Decisions, Highway ……1 - 22
Exhibit C – General Decisions, Landscape ……1 - 17

Part II

General Conditions Table of Contents……GCTOC 1 - 2
General Conditions of the Contract……..GC 1 - 15

Part III

Standard Specifications…….....SS 1
Special Provisions ……..SP 1 – 18

Part IV

IDOT Highway Standards Table of Contents …… HSTOC1
Perpendicular Curb Ramps for Sidewalks (Std. 424001)…… 1 – 2
Concrete Curb Type B and Comb. Curb and Gutter (Std. 606001) ……. 1 – 2
Urban Lane Closure, 2L, 2W, Undivided (Std.701501) ……..1
Urban Lane Closure, 2L, 2W, With Bidirectional (Std.701502) ……. 1 - 2

Sidewalk, Corner, or Crosswalk Closure (Std.701801) ……. 1 - 2
Traffic Control Devices (Std.701901) …….. 1 - 3

PART I

Invitation to Bid……IB 1 - 2
Instructions to Bidders Table of Contents……ISBTOC 1
Instructions to Bidders……ISB 1 - 5
Bid Proposal/Bidding Schedule……..... BP 1 - 2
Bid Schedule ……..…… BS 1
Bid Conditions……BC 1 - 5
Contract……..……....C 1 - 1
Standard Form of Performance Bond…….....PB 1 – 2
Community Development Fund Provisions …….....CDBG 1 - 5
Exhibit A – Labor Federal Standard Labor Provisions ……1 - 5
Exhibit B – General Decisions, Highway ……..……1 - 22
Exhibit C – General Decisions, Landscape ……..……1 - 17

INVITATION TO BID

for the

Wilson Street Sidewalk Construction

1. **NOTICE** is hereby given that the City Council of the City of Batavia, Illinois (hereinafter called the "Owner") will receive sealed bids at the Public Works Office, 200 N. Raddant Rd.**,** Batavia, Illinois 60510-2292, until **10:15 A.M.** local time on **Tuesday, April 19, 2016,** for the construction of the **Wilson Street Sidewalk Construction** (hereinafter called the "Project") at which time and place the bids will be publicly opened and read aloud at **10:30 A.M** local time.

2. This project will be funded by Community Development Block Grant Funds (CDBG) and Local Funds. The Contractor (and any Subcontractors) shall comply with all terms and conditions of the Federal Labor Standards Provisions (Exhibit A) and the General Decision(s) (Exhibit B & C) attached to this Contract.

3. The work for which bids are to be received generally includes sidewalk construction, ADA ramp construction, and landscape restoration.

4. All work shall be in accordance with the specifications as set forth in the Contract Documents, plans and other State and Local regulations as applicable.

5. The proposal from the Contractor shall consist of the submission of the completed Contract Documents and supplemental addendums as received from the Owner. The bid shall be made on the BID PROPOSAL, BID SCHEDULE, BID CONDITIONS, AND BID FORM provided as part of these Bidding Documents and shall be accompanied by a bid guarantee in the form of a Certified or Cashier's check from a responsible solvent bank or Bid Bond made payable to the **City of Batavia** in the amount of five percent (5%) of the bid amount. The amount of the bid guarantee shall be forfeited to the Owner if the Bidder neglects or refuses to enter into a Contract or to furnish performance security after the bid has been accepted.

6. The Owner reserves the right to require the low Bidder to file proof, within seven (7) calendar days of the bid opening, of the Contractor's ability to finance and execute the project. This proof shall include, but not be limited to, a financial statement, a list of equipment owned by Bidder, and a backlog of jobs under a Contract. The Project will be awarded once the qualified low Bidder furnishes satisfactory evidence that they have the ability, sufficient capital, facilities, and plant to enable the Contractor to prosecute the work successfully and promptly, and to complete the work within the time specified in the Contract Documents.

7. The Contractor shall provide a written statement as part of the Bid submittal of verifying their ability to commence work on the project within the time specified in the Contract Documents.

8. The Owner intends to accept the lowest responsible bid and the Owner reserves the right to reject any and all bids, offers, or proposals submitted, or to advertise for new bids. The Owner reserves the right to defer the acceptance of any bid and the award of a Contract for a period not exceeding ninety (90) days after the date of opening the bids. The public bid opening date is on **Tuesday, April 19, 2016** at **10:30 A.M.** local time.

9. The successful Bidder to whom the Contract shall be awarded shall sign the Contract, furnish a Performance Bond, or Letter of Credit in amounts equal to one hundred ten percent (110%) of the Contract Amount and required Certificates of Insurance, within five (5) calendar days after the Contract has been awarded. Failure to do so shall make the Contract null and void.

10. Bidders are advised of the following requirements of this contract: 1) Federal Wage Rate(s) (General Decisions marked Exhibits B & C); 2) 5% Bid Security with submittal of bid; 3) 110% Performance Security five calendar days after Contract award; 4) applicable OSHA and EPA requirements; 5) Community Development Fund Block Grant (CDBG) Contract Provisions (attached to this Contract); 6) Federal Labor Standards Provisions (Exhibit A attached to this Contract); 7) General Decision(s) (Exhibit B & C attached to this Contract).

11. Bid package (Instructions to Bidders, Contract Documents, Plans, Specifications and Special Provisions) for use by prospective Bidders and interested suppliers may be obtained from the Public Works Street Division Office, 200 North Raddant Road, Batavia, Illinois, 60510-2292.

Dated this 29th day of March, 2016.

City of Batavia

Timothy Grimm, P.E.
Civil Engineer

INSTRUCTIONS TO BIDDERS

TABLE OF CONTENTS

Paragraph Number / Description **Page Number**

1. Location……ISB - 1
2. Scope……ISB - 1
3. Definitions……ISB - 1
4. Bid Date……ISB - 1
5. Bid Opening……ISB - 1
6. Pre-Bid Meeting……ISB - 1
7. Interpretations of Contract Documents……ISB - 1
8. Preparation of Bid Proposal……ISB - 2
9. Signature of Bid Proposal……ISB - 2
10. Bid Guarantee……ISB - 2
11. Basis of Award……ISB - 3
12. Withdrawal of Proposal……ISB - 3
13. Comparison of Bids……ISB - 3
14. Contract and Performance Security……ISB - 3
15. Forfeiture of Bid Deposit……ISB - 3
16. Rejection of Proposals……ISB - 4
17. Evidence of Ability……ISB - 4
18. Examination of Work……ISB - 4
19. Laws Affecting Public Work……ISB - 4
20. Insurance……ISB - 4
21. Contractor Interference……ISB - 4
22. Inspection and Testing Materials……ISB - 4
23. When Award is Effective……ISB - 5
24. Employment of Illinois Workers……ISB - 5
25. Federal Labor Standard Provisions……ISB – 5
26. Federal Wages……ISB - 5

INSTRUCTIONS TO BIDDERS

1. **LOCATION:**
The proposed work covered by these documents is located as shown on the location map contained in the drawings, or as designated by the Owner.

In general, all work is to be constructed within public land owned and/or dedicated for public use, or easements for which the Owner has obtained clearance for the use intended.

2. **SCOPE:**
The scope of work is outlined in the Contract Documents, Specifications and drawings.

3. **DEFINITIONS:**
Wherever the word "Owner" is used in these documents, it shall be understood to mean **City of Batavia**. Wherever the words "directed", "permitted", "ordered", "designated", "approved", "satisfactory", "acceptable", or words of like import are used, they shall be understood to refer to the exercise of the authority or judgment vested in the City Engineer.

4. **BID DATE:**
Sealed bid proposals will be received for the proposed work specified herein at the Public Works office, 200 North Raddant Road, Batavia, Illinois 60510-2292 until **10:15 A.M.** local prevailing time on **Tuesday, April 19, 2016.**

5. **BID OPENING:**
The public Bid Opening will be held at the Public Works office, 200 North Raddant Road, Batavia, Illinois 60510-2292 at **10:30 o'clock A.M.** local prevailing time on **Tuesday, April 19, 2016.**

6. **PRE-BID MEETING:**
Not applicable.

7. **INTERPRETATION OF CONTRACT DOCUMENTS:**
If any person, contemplating submitting a bid for the proposed contract is in doubt as to the true meaning of any part of the specifications, or other proposed contract documents, they may submit to the Owner a written request, **no later than 10:00 AM local time, and three business days prior to the bid opening**, for an interpretation thereof. The person submitting the request will be responsible for its prompt delivery. Any interpretation of the proposed documents will be made only by an Addendum duly issued by the Owner and a copy of such Addendum will be mailed, faxed, emailed or delivered to each person receiving a set of such documents. All Addenda to Bidders shall be incorporated in the bids and will become a part of the Contract Documents. **No oral interpretations** by the Owner will be binding; only instructions in writing will be deemed valid. All requests for interpretations regarding this project may be directed to Timothy Grimm, Public Works Engineering Division, 200 North

Raddant Road, Batavia, Illinois 60510-2292, phone 630-454-2756, or fax 630-454-23511.

8. **PREPARATION OF BID PROPOSAL:**

Each bid proposal shall be submitted on the form provided by the Owner. The bid proposal shall be enclosed in an opaque envelope, which is sealed and clearly marked on the front **"Bid Proposal – Wilson Street Sidewalk Construction"**, addressed to the Owner, with the name and address of the Bidder endorsed thereon.

The Proposal from the Contractor shall consist of the Compete Contract Documents and supplemental addendums as received from the Owner. The bound contract Documents shall not be separated and shall be submitted as a complete packet. Bid proposals are to be submitted for the work specified on the attached BID PROPOSAL, BID SCHEDULE, BID CONDITIONS, AND BID SCHEDULE, all furnished and installed in strict conformance with the specifications therefore. No proposal will be considered except upon completed work fully installed in place as specified.

All blank spaces in the proposal shall be properly filled in with ink opposite each item, using figures and written words, as indicated in the column headings.

In case of discrepancy between the prices indicated in figures and in written words, the written words shall govern and will be used in computing the total bid price for comparison of proposals.

9. **SIGNATURE ON BID PROPOSAL:**

Each bid proposal shall contain the full name of every person, firm, or corporation interested in the same and the address of each Bidder. When firms bid, the name of each member should be signed and the firm name added. When a corporation is the Bidder, the person signing shall state under the laws of what state the corporation is chartered, and the name and title of the officer having authority under the by-laws to sign contracts. Any one agent signing the bid proposal must file with it legal evidence of their authority to do so.

10. **BID GUARANTEE:**

Each bid proposal shall be accompanied by a bid guarantee in the form of a Certified or Cashier's Check from a responsible solvent bank or Bid Bond made payable to the **City of Batavia** in the amount of five percent (5%) of the bid amount. Said bid guarantee to serve as a guarantee that if the Contractor's proposal is accepted and a contract awarded, the successful Bidder, within the specified time, will enter into a contract agreement with the Owner and post the required Performance Security.

All bid guarantees will be returned to unsuccessful Bidders after a contract has been entered into with the successful Bidder.

11. **BASIS OF AWARD:**

Award of a contract or contracts will be based upon the bid proposals submitted and

then **only** to the party (or parties) submitting the lowest responsible bid (or bids) as determined by the Owner in its sole judgment. The Owner reserves the right to waive any informality in the proposals or to reject any or all bids.

12. **WITHDRAWAL OF PROPOSAL:**
If a Bidder wishes to withdraw its proposal, the Bidder may do so before the time fixed for the opening of bids, without prejudice to the Bidder, by communicating the Contractor's purpose in writing and delivered by certified or registered mail, postage prepaid to the Owner, and when the Contractor's bid is reached, it will be handed to the Contractor or to the Contractor's authorized agent unopened. Bids opened and read may not be withdrawn for a period of forty-five (45) days. Corrections, modifications, or amendments to bids for any reason, including any error or miscalculation, shall not be permitted. Withdrawals of bids permitted forty-five (45) days after the bid opening may be made in writing and delivered by certified or registered mail, postage prepaid to the Owner.

13. **COMPARISON OF BIDS:**
Proposals for the purpose of awarding a contract will be compared on the basis of the total amount bid, which is to be obtained by applying the unit and/or lump sum bid prices to the quantities listed in the proposal herein.

The estimated quantities of unit price items listed in the proposal, although stated with as much accuracy as is possible in advance, are approximately only, and are given **only** for the purpose of comparing bids. The quantities on which payment will be made to the Contractor are to be determined by measurements of the work actually performed by the Contractor as specified in the Contract.

14. **CONTRACT AND PERFORMANCE SECURITY:**
The person, firm, or corporation to whom a contract is awarded will be required to execute a contract, furnish a Performance Bond, Letter of Credit or cash with an acceptable surety company within five (5) calendar days after the contract is awarded to the Contractor. The Performance Bond shall be in the amount of one hundred ten percent (110%) of the award contract amount. The Performance Security as security for the faithful performance of this Contract and for the payment of all persons performing labor and furnishing materials in connection with the Contract. Such bond shall remain in full force for a period of one year from and after the final acceptance and payment by the Owner. The cost of such performance security shall be included as part of the bid.

15. **FORFEITURE OF BID DEPOSIT:**
If a person, firm, or corporation to whom a contract is awarded fails or neglects to enter into a contract and bond within the specified time limit, the Bidder will be considered to having abandoned it and the bid deposit shall thereupon be forfeited to the Owner and collected as provided by law.

16. **REJECTION OF PROPOSALS:**
Reasonable evidence or grounds for supposing that any Bidder is interested in more

than one (1) proposal for the same item may cause a rejection of all proposals in which the Bidder is interested.

17. **EVIDENCE OF ABILITY :**
Bidders to whom an award may be contemplated, upon request, shall submit a full statement of the Contractor's experience in construction work similar to that covered by this contract and the equipment that he has available or can secure which will permit the work being carried out expeditiously. Before the proposal is accepted, the Owner may require additional information with respect to the Bidders' financial ability to begin the work promptly and conduct it as required by the contract and specifications.

18. **EXAMINATION OF WORK :**
Bidders must carefully examine the entire site of the work and make all necessary investigations to inform themselves thoroughly as to the facilities for delivering and handling materials for the work; and as to all difficulties that may be involved in the complete execution. Bidders must carefully examine the specifications for the work. The Owner will not be responsible, in any manner, for verbal answers to any inquiries regarding the meaning of the specifications given prior to the awarding of the contract. Bidders must contact the Public Works Engineering Division at (630) 454-2750, before visiting the site.

19. **LAWS AFFECTING PUBLIC WORK:**
The attention of the Bidder is called to the laws of the State of Illinois and to local ordinances pertaining to contracts on public work, and to the statutory requirements of the State of Illinois relative to licensing of corporations organized under the laws of any other state.

20. **INSURANCE:**
The attention of the Bidder is particularly called to the requirements in the General Conditions, which covers required Insurance.

21. **CONTRACTOR INTERFERENCE :**
Bidders are required to inform themselves fully of the conditions relating to construction and labor under which the work will be performed and the Bidders must employ, so far as possible such methods and means in the carrying out of the work as will not cause any interruption or interference with any other contractor.

22. **INSPECTION AND TESTING MATERIALS :**
The Bidder to whom this contract is awarded must pay for inspection and testing materials in accordance with the requirements of the detail specifications wherever such inspection or testing is called for under the specifications.

23. **WHEN AWARD IS EFFECTIVE :**
Award is effective upon formal acceptance and execution of the Contract by the Owner. A contract shall be deemed as having been awarded when official of the award has been provided to the successful Bidder.

24. **EMPLOYMENT OF ILLINOIS WORKERS**
Attention is called to the need for compliance with the Illinois Works on Public Works ACT 30 ILCS 570-0.01 et seq.

25. **FEDERAL LABOR STANDARDS PROVISIONS**
The Contractor (and any Subcontractors) shall comply with all terms and conditions of the Federal Labor Standards Provisions (Exhibit A) and the General Decision(s) (Exhibit B and Exhibit C) attached to this Contract.

26. **FEDERAL WAGES**

Federal Wages: Contractor shall not pay less than the Federal prevailing rates of wages to all laborers, workmen, and mechanics performing work under this contract, and shall comply with the requirements of the Federal Labor Standard Provisions including, without limitation, the submission of certified weekly payroll reports as required. The contractor is advised that failure to timely submit such reports shall be cause for the withholding of payments otherwise due the contractor until compliance with the reporting requirements is achieved.

Any bond furnished under this contract shall include such provisions as will guarantee the faithful performance of such prevailing wage clause as provided by the contract.

The Contractor and each of his Sub-Contractors shall pay each of his employees engaged in work on the project under this Contract in full (less deductions made mandatory by law) not less often than once each week.

BID PROPOSAL

CITY OF BATAVIA

PROJECT: Wilson Street Sidewalk Construction

NAME OF BIDDER: _____

BUSINESS ADDRESS: _____

TELEPHONE NUMBER: (_____)_____

TO: City of Batavia Attn: Public Works Department Office
200 N. Raddant Rd.
Batavia, IL 60510-2292

The proposal from the Contractor shall consist of the submission of the completed Contract Documents and supplemental addendums as received from the Owner. The bid shall be made on the BID PROPOSAL, BID SCHEDULE, BID CONDITIONS, AND BID FORM provided as part of these Bidding Documents and shall be accompanied by a bid guarantee in the form of a Certified or Cashier's check from a responsible solvent bank or Bid Bond made payable to the **City of Batavia** in the amount of five percent (5%) of the bid amount. The amount of the bid guarantee shall be forfeited to the Owner if the Bidder neglects or refuses to enter into a Contract or to furnish performance security after the bid has been accepted.

The undersigned, as Bidder, declares that the only person or parties interested in this Bid, as principals, are those named herein; that this Bid is made without collusion with any other person, firm, or corporation; that the Bidder has carefully examined the location of the proposed work, the proposed forms, and the Contract Specifications for the above signed work, all of which are on file in the office of the Public Works Street Division and all other documents referred to or mentioned in the Contract Documents and Specifications.

The undersigned Bidder agrees that if this Bid is accepted, the Bidder will contract with the Owner, in the form of the copy of the Contract prepared by the City of Batavia, to provide all necessary machinery, tools, apparatus, and other means of construction, including utility and transportation services, necessary to do all the work and furnish all the materials and equipment specified or referred to in the Contract Documents in the manner and time therein prescribed, and according to the requirements of the Owner as set forth therein. The undersigned Bidder further agrees that if this bid is accepted, to furnish the Contractor's bonds and insurance specified in the General Conditions, and to do all other things required if the Contractor by the Contract Documents, and that he will take, in full payment therefore, the sum set forth in the following Bidding Schedule.

BIDDING SCHEDULE

Bidder affirms that the bid price quoted below includes all equipment, materials, labor, services, shoring, removal, personnel, tools, machinery, utilities, supplies, supervision, overhead expense, profits, appliances, transportation and delivery charges, temporary facilities, and all other appurtenances, facilities and incidentals reasonably inferred as necessary to complete the Work and ready for use in a timely and workmanlike manner all in accordance with the Contract Documents.

BID SCHEDULE
WILSON STREET SIDEWALK CONSTRUCTION

No.	Description of Item	Estimated Quantities	Units	Unit Price	Extended Amount
1	TREE REMOVAL (6 TO 15 UNITS DIAMETER)	26	UNIT		
2	TREE REMOVAL (OVER 15 UNITS DIAMETER)	21	UNIT		
3	TREE ROOT PRUNING	7	EACH		
4	NITROGEN FERTILIZER NUTRIENT	23	POUND		
5	PHOSPHORUS FERTILIZER NUTRIENT	23	POUND		
6	POTASSIUM FERTILIZER NUTRIENT	23	POUND		
7	REMOVAL AND DISPOSAL OF UNSUITABLE MATERIAL	130	CU YD		
8	TOPSOIL FURNISH AND PLACE, 6"	271	SQ YD		
9	SEEDING, CLASS 1	0.25	0.25		
10	MULCH, METHOD 3	0.25	0.25		
11	SUBBASE GRANULAR MATERIAL, TYPE B	30	TON		
12	AGGREGATE BASE COURSE, TYPE B 4"	338	SQ YD		
13	PORTLAND CEMENT CONCRETE SIDEWALK, 5 INCH	3043	SQ FT		
14	DETECTABLE WARNINGS	26	SQ FT		
15	SIDEWALK REMOVAL	25	SQ FT		
16	COMBINATION CURB AND GUTTER REMOVAL AND REPLACEMENT	9	FOOT		
17	MANHOLES TO BE ADJUSTED	1	EACH		
18	TRAFFIC CONTROL AND PROTECTION	1	L SUM		
19	CONSTRUCTION LAYOUT	1	L SUM		
20	CONCRETE CURB REMOVAL	10	FOOT		
21	LANDSCAPING, SPECIAL	1	L SUM		
				TOTAL BID AMOUNT:	

TOTAL BID AMOUNT (in writing) _____

Authorized By:_____ Date:_____

Company Name:_____

Contact Person:_____Alternate Phone #: _____
Please Print

Company Address:_____

E-Mail Address: _____

Telephone #:_____ Hours:_____

Years of Experience:_____

Subcontractors:
The quoted bid price includes work of the following Subcontractors:

_____ $_____

_____ $_____

_____ $_____

_____ $_____

_____ $_____

_____ $_____

BID CONDITIONS

It is expressly understood and agreed that the foregoing Total Bid amount is the basis for establishing the amount of the bid security on this bid for the **Wilson Street Sidewalk Construction.** The undersigned has carefully checked the above Bidding Schedule against the Specifications and other Contract Documents before preparing this bid and accepts the said quantities to be substantially correct, both as to classification and amount, and in accordance with the Specifications and other Contract Documents.

If this Bid is accepted and the undersigned shall fail to Contract as aforesaid and to give the Performance Security required by the General Conditions of Contract or by law, and to provide all insurance as required by the Contract Documents within five calendar (5) calendar days after the date of the award of the Contract, and thereupon the proposal and the acceptance thereof shall be null and void, and the forfeiture of such security accompanying this proposal shall operate and the same shall be the property of the Owner as liquidated damages.

The undersigned agrees to complete all work, as defined in the Contract Completion section of the Special Provisions. If the Contractor shall fail to complete the work within the contract time, or within any extension of time granted by the City, then the Contractor shall pay the Owner seven hundred fifty dollars ($750.00) for liquidated damages for each calendar day that the Contractor shall be in default after the time stipulated in the Contract Documents.

PROPOSAL SIGNATURE

1. **CORPORATION:**
The Bidder is a corporation organized and existing under the laws of the State of _____, which operates under the legal name of

Corporate Name: _____

Business Address: _____

_____

Telephone Number: _____

and the full name of its officers names are as follows:

President: _____

Secretary: _____

Treasurer: _____

Manager: _____

The signator is authorized to sign construction proposals and Contracts for the company by action of its Board or Directors taken, a certified copy, which is available upon request.

Signed By: _____ **Date:**_____
Title:

Attest: _____
Secretary

2. **PARTNERSHIP:**
The Bidder is a partnership consisting of individual partners whose full names and addresses are as follows:

Name: _____

Address: _____

Name: _____

Address: _____

Name: _____

Address: _____

The Partnership does business under the legal name of:

Firm Name: _____

Business Address: _____

_____

Telephone Number: _____

Signed By: _____ **Date:**_____
Title:

3. **INDIVIDUAL:**
The Bidder is an individual whose full name is:

Name: _____

and if operating under a trade name, said trade name is as follows:

Trade Name: _____

Business Address: _____

_____

Telephone Number: _____

Signed By: _____ **Date:**_____
Title:

REFERENCES

List below current municipal references for whom you have performed work comparable to that required by this proposal.

Name:_____

Address:_____

City, State, Zip Code:_____

Telephone Number & Email Address:_____

Contact Person:_____ Dates of Service:_____

Name:_____

Address:_____

City, State, Zip Code:_____

Telephone Number & Email Address:_____

Contact Person:_____ Dates of Service:_____

Name:_____

Address:_____

City, State, Zip Code:_____

Telephone Number & Email Address:_____

Contact Person:_____ Dates of Service:_____

Name:_____

Address:_____

City, State, Zip Code:_____

Telephone Number & Email Address:_____

Contact Person:_____ Dates of Service:_____

Name:_____

Address:_____

City, State, Zip Code:_____

Telephone Number & Email Address:_____

Contact Person:_____ Dates of Service:_____

CONTRACT

1. **THIS AGREEMENT**, made and concluded this ___ day of _____, 2016, between the **City of Batavia** acting by and through **the City Council of the City of Batavia**, known as the party of the first part, and _____ **of** _____**, Illinois,** their executors, administrators, successors, or assigns, known as the party of the second part.

2. **WITNESSETH:** That for and in consideration of the payments and agreements mentioned in the Proposal, attached hereto, to be made and performed by the part of the first part and, according to the terms expressed in the Contract Bond referring to these presents, the party of the second part agrees with said party of the first part, at their own proper cost and expense, to do all the work, furnish all materials, and all labor necessary to construct the **Wilson Street Sidewalk Construction** in accordance with the plans, specifications, and special provisions hereinafter described and in full compliance with all of the parts of this agreement and the requirements of the Engineer under it.

3. And it is also understood and agreed to that the Contract Documents for the **Wilson Street Sidewalk Construction** attached hereto, constitute all essential documents of this contract and are a part thereof.

4. **IN WITNESS WHEREOF**, the said parties have executed these presents on the date above mentioned.

For the Owner,
Party of the First Part **City of Batavia**

_____ By:_____
Attest: Heidi Wetzel, City Clerk Jeffery D. Schielke, Mayor
(Corporate Seal)

For the Contractor,
Party of the Second Part **Name of Company of City, IL**

Printed Name:_____

Signature:_____
President, Party of Second Part

_____
Attest: Secretary

STANDARD FORM OF PERFORMANCE BOND

KNOW ALL MEN BY THESE PRESENTS, that we _____ a corporation organized under the laws of the State of _____ and licensed to do business in the State of Illinois, as Principal, and _____ a corporation organized and existing under the laws of the State of _____, with authority to do business in the State of Illinois, as Surety, are held and firmly bound unto the City of Batavia, State of Illinois, in the penal sum of _____Dollars ($_____), lawful money of the United States, well and truly to be paid unto said City of Batavia, Illinois for the payment of which we bind ourselves, our successors, and assigns, jointly, severally, and firmly by these presents.

THE CONDITION OF THE FOREGOING OBLIGATION IS SUCH that whereas, the said Principal has entered into a written contract with an Owner which is the City of Batavia, Illinois and acts through the City Council of the City of Batavia for the construction of the work designated **Wilson Street Sidewalk Construction,** which contract hereby is referred to and made a part hereof, as if written herein at length, and whereby the said Principal has promised and agreed to perform said work in accordance with the terms of said contract, and has promised to pay all sums of money due for any labor, materials, apparatus, fixtures or machinery furnished to such Principal for the purpose of performing such work and has further agreed to pay all direct and indirect damages to any person, firm, company, or corporation suffered or sustained on account of the performance of such work during the time thereof and until such work is completed and accepted; and has further agreed that this bond shall insure to the benefit of any person, firm, company, or corporation, to whom any money may be due from the Principal, sub-contractor, or otherwise, for any such labor, materials, apparatus, fixtures, or machinery so furnished and that suit may be maintained on such bond by any such person, firm, company, or corporation, for the recovery of any such money.

NOW THEREFORE, if the said Principal shall well and truly perform said work in accordance with the terms of said contract, and shall pay all sums of money due or to become due for any labor, materials, apparatus, fixtures, or machinery furnished to the Contractor for the purpose of constructing such work, and shall commence and complete the work within the time prescribed in said contract, and shall pay and discharge all damages, direct and indirect, that may be suffered or sustained on account of such work during the time of the performance thereof and until the said work shall have been accepted, and shall hold the aforesaid Owner and its or the Owner's agents harmless on account of any such damages, and shall in all respects fully and faithfully comply with all the provisions, conditions, and requirements of said contract, then this obligation to be void; otherwise to remain in full force and effect.

Approved this _____ day of

_____

A.D. 2016.

Batavia City Council
Governing Body of Owner

By: _____
Jeffery D. Schielke, Mayor

Attest:

For: _____

_____
Heidi Wetzel, City Clerk

Municipal or Corporate Seal

State of Illinois

SS.

County of Kane

IN WITNESS WHEREOF, we have duly executed the foregoing obligation this _____ day of _____, A.D. 2016.

Corporate
Name:_____

By:_____
President

Attest:_____
Secretary

Surety_____
(Seal)

By:_____
Attorney in Fact (Seal)

By:_____
Attorney in Fact (Seal)

CDBG CONTRACT PROVISIONS

Kane County Office of Community Reinvestment
County Government Center
719 Batavia Avenue
Geneva, IL 60134

COMMUNITY DEVELOPMENT FUND PROVISIONS

for Batavia Sidewalk Project

1. Federal Labor Standards Provisions

   The Contractor (and any Subcontractors) shall comply with all terms and conditions of the Federal Labor Standards Provisions (Exhibit A) and the General Decision(s) (Exhibit B and Exhibit C) attached to this Contract.

2. Compliance with Executive Order 11246

   During the performance of this Contract, the Contractor agrees as follows:

   a. The Contractor will not discriminate against any employee or applicant because of race, creed, color, age, sex, handicap or national origin. The Contractor will take affirmative action to ensure that applicants are employed and that employees are treated during employment without regard to their race, religion, color, sex, age, handicap or national origin. Such action shall include, but not be limited to, the following: Employment, upgrading, demotion or transfer; recruitment advertising, layoff or termination, rates of pay or other forms of compensation, and selection for training, including apprenticeship. The Contractor agrees to post in conspicuous places, available to employees and applicants for employment, notices to be provided setting forth the provisions of this nondiscriminating clause.

   b. The Contractor will, in all solicitations or advertisements for employees place by or on behalf of the Contractor, state that all qualified applicants will receive consideration for employment without regard to race, religion, color, sex, age, handicap or national origin.

   c. The Contractor will send to each labor union or representative of workers with which he has a collective bargaining agreement of other contract or understanding, a notice advising the said labor union or worker's representatives of commitments under this section, and shall post copies of the notice in conspicuous places available to employees and applicants for employment.

   d. The Contractor will not discriminate against any employee or applicant for employment because he or she is a disabled veteran or a veteran of the Vietnam Era in regard to any position for which the employee or applicant for employment is qualified. The Contractor agrees to take affirmative action to employ, advance in employment, and otherwise treat qualified disabled veterans and veterans of the Vietnam Era without discrimination based upon their disability or veteran status in all employment practices such as the following: employment upgrading,

demotion or transfer, recruitment, advertising, layoff or termination, rates of pay or other forms of compensation, and selection for training, including apprenticeship.

e. The Contractor will comply with all provisions of Executive Order 11246 of September 24, 1965, and of the rules, regulations and relevant orders of the Secretary of Labor. No segregated facilities will be maintained as required by Title VI of Civil Rights Acts of 1964.

f. The Contractor will furnish all information and reports required by Executive Order 11246 of September 24, 1965, and by rules, regulations and orders of the Secretary of Labor, or pursuant thereto, and will permit access to his book, records, time cards, and accounts by the administering agency and the Secretary of Labor for the purposes of investigation to ascertain compliance with such rules, regulations and orders.

g. In the event of the Contractor's non-compliance with the non-discriminatory clauses of this Contract or with any of the said rules, regulations or orders, this Contract may be canceled, terminated, or suspended in whole or in part and the Contractor may be declared ineligible for further grantee contracts or Federally assisted construction contracts in accordance with procedures authorized in Executive Order 11236 of September 24, 1965, and such other sanctions may be imposed and remedies invoked as provided in Executive Order 11246 of September 24, 1965, or by rule, regulations or order, of the Secretary of Labor, or as otherwise provided by law.

h. The Contractor will include the portion of the sentence immediately preceding paragraph (1) and the provisions of paragraphs (1) through (8) in every subcontract or purchase order unless exempted by rules, regulations or orders of the Secretary of Labor issued pursuant to Section 204 of Executive Order 11246 of September 24, 1965, so that such provisions will be binding upon each subcontractor or vendor. The Contractor will take such action with respect to any subcontract or purchase order as the administering agency may direct as a means of enforcing such provisions, including sanctions for noncompliance. Provided, however, that in the event a contractor becomes involved in, or is threatened with, litigation with a subcontractor or vendor as a result of such direction by the administering agency, the Contractor may request the United States to enter into such litigation to protect the interests of the United States.

3. Section 3 Clause (Applicable if Contract amount exceeds $100,000)

a. The work to be performed under this Contract is subject to the requirements of Section 3 of the Housing and Urban Development Act of 1968, as amended, 12 U.S.C. 1701u (Section 3). The purpose of Section 3 is to ensure that employment and other economic opportunities generated by HUD assistance or HUD-assisted projects covered by Section 3, shall, to the greatest extent feasible, be directed to low- and very low-income persons, particularly persons who are recipients of HUD assistance for housing.

b. The parties to this contract to comply with HUD's regulations in 24 CFR part 135, which implement Section 3. As evidenced by their execution of this contract, the parties to this contract certify that they are under no contractual or other impediment that would prevent them from complying with the part 135 regulations.

c. The Contractor agrees to send to each labor organization or representative of workers with

which the Contractor has a collective bargaining agreement or other understanding, if any, a notice advising the labor organization or workers' representative of the Contractor's commitments under this Section 3 clause, and will post copies of the notice in conspicuous places at the work site where both employees and applicants for training and employment positions can see the notice. The notice shall describe the Section 3 preference, shall set forth minimum number and job titles subject to hire, availability of apprenticeship and training positions, the qualifications for each; and the name and location of the person(s) taking applications for each of the positions; and the anticipated date the work shall begin.

d. The Contractor agrees to include this Section 3 clause in every subcontract subject to compliance with regulations in 24 CFR part 135, and agrees to take appropriate action, as provided in an applicable provision of the subcontract in this Section 3 clause, upon a finding that the subcontractor is in violation of the regulations in 24 CFR part 135. The Contractor will not subcontract with any subcontractor where the Contractor has notice or knowledge that the subcontractor has been found in violation of the regulations in 24 CFR part 135.

e. The Contractor will certify that any vacant employment positions, including training positions, that are filled (1) after the Contractor is selected but before the contract is executed, and (2) with persons other than those to whom the regulations of 24 CFR part 135 require employment opportunities to be directed, were not filled to circumvent the Contractor's obligations under 24 CFR part 135.

f. Noncompliance with HUD's regulations in 24 CFR part 135 may result in sanctions, termination of this contract for default, and debarment or suspension from future HUD assisted contracts.

g. With respect to work performed in connection with Section 3 covered Indian housing assistance, Section 7(b) of the Indian Self-Determination and Education Assistance Act (25 U.S.C. 450e) also applies to the work to be performed under this contract. Section 7(b) requires that to the greatest extent feasible (i) preference and opportunities for training and employment shall be given to Indians, and (ii) preference in the award of contracts and subcontracts shall be given to Indian organizations and Indian-owned Economic Enterprises. Parties to this contract that are subject to the provisions of Section 3 and Section 7(b) agree to comply with Section 3 to the maximum extent feasible, but not in derogation of compliance with Section 7(b).

4. Audit, Inspection, and Retention of Records

The Contractor shall permit the Owner, the Kane County Development Department, the U.S. Department of Housing and Urban Development, the U.S. Department of Labor, the Comptroller General of the United States, or any of their duly authorized representatives, to inspect and audit any books, documents, papers, and records of the Contractor which are directly pertinent to the Contractor’s performance under this Contract until the expiration of three (3) years after the Owner makes final payment under this Contract and all other pending matters are closed. Failure of the Contractor to produce or have available these records may result in debarment.

6. Energy Efficiency

The Contractor shall comply with the mandatory standards and policies relating to energy efficiency which are contained in the state energy conservation plan issued in compliance with the Energy Policy and Conservation Act (Pub. L. 94-163, 89 Stat. 871).

7. Environmental Protection (Applicable if Contract amount exceeds $100,000)

   The Contractor shall comply with the applicable standards, orders, or requirements issued under section 306 of the Clean Air Act (42 U.S.C. 1857(h)), section 508 of the Clean Water Act (33 U.S.C. 1368), Executive Order 11738, and Environmental Protection Agency regulations (40 CFR part 15).

8. Violation or Breach of Contract

   If any party violates or breaches any term of this Contract, such violation or breach shall be deemed to constitute a default, and the other parties have the right to seek such administrative, contractual or legal remedies as may be suitable to the violation or breach; and, in addition, if any party, by reason of any default, fails within fifteen (15) days after notice thereof by another party to comply with the conditions of the Contract, the party having provided such notice may terminate this Contract.

9. Termination for Default or Convenience

   a. The Owner may terminate this Contract, in whole or in part, at any time by written notice to the Contractor. The Contractor shall be paid its costs, including Contract closeout costs and profit on work performed up to the time of termination. The Contractor shall promptly submit its termination claim to be paid to the Contractor. If the Contractor has any property in its possession belonging to the Owner, the Contractor will account for the same, and dispose of it in the manner the Owner directs. The parties agree that the Owner shall not be liable for the cost of the Contractor doing business, his overhead, or salaries if this Contract is terminated.

   b. If the Contractor fails to perform in the manner called for in this Contract, or if the Contractor fails to comply with any other provisions of this Contract, the Owner may terminate this Contract for default. Termination shall be effected by serving a "Notice of Termination" on the Contractor setting forth the manner in which the Contractor is in default. The Contractor will only be paid the Contract price for services performed in accordance with the manner of performance set forth in this Contract.

   c. In the event of a strike, fire, flood, or events which are not the fault of the Contractor, or events that make it impossible or impractical for the Contractor to complete said work on schedule, the Owner, after establishing a new performance schedule, may allow the Contractor to continue work, or may treat the said events as a termination for convenience.

10. Subcontracts

    a. The Contractor shall not subcontract any work to be performed under this Contract to parties listed on the General Services Administration's List of Parties Excluded from Federal Procurement or Nonprocurement Programs in accordance with E.O.s 12549 and 12689, "Debarment and Suspension." This list contains the names of parties debarred, suspended, or

otherwise excluded by agencies, and contractors declared ineligible under statutory or regulatory authority other than E.O. 12549.

b. The provisions enumerated herein (including Exhibits) shall be applied to and physically be made a part of any and all subcontracts entered into by the Contractor for the performance of any part of the work of this Contract. The Contractor shall notify the Owner and the Kane County Development Department in writing prior to executing such subcontracts so that a pre-construction conference may be scheduled with the subcontractor and Owner to review applicable contract provisions.

EXHIBIT A

Applicability

The Project or Program to which the construction work covered by this contract pertains is being assisted by the United States of America and the following Federal Labor Standards Provisions are included in this Contract pursuant to the provisions applicable to such Federal assistance.

A. 1. (i) Minimum Wages. All laborers and mechanics employed or working upon the site of the work, will be paid unconditionally and not less often than once a week, and without subsequent deduction or rebate on any account (except such payroll deductions as are permitted by regulations issued by the Secretary of Labor under the Copeland Act (29 CFR Part 3), the full amount of wages and bona fide fringe benefits (or cash equivalents thereof) due at time of payment computed at rates not less than those contained in the wage determination of the Secretary of Labor which is attached hereto and made a part hereof, regardless of any contractual relationship which may be alleged to exist between the contractor and such laborers and mechanics. Contributions made or costs reasonably anticipated for bona fide fringe benefits under Section l(b)(2) of the Davis-Bacon Act on behalf of laborers or mechanics are considered wages paid to such laborers or mechanics, subject to the provisions of 29 CFR 5.5(a)(1)(iv); also, regular contributions made or costs incurred for more than a weekly period (but not less often than quarterly) under plans, funds, or programs, which cover the particular weekly period, are deemed to be constructively made or incurred during such weekly period.

Such laborers and mechanics shall be paid the appropriate wage rate and fringe benefits on the wage determination for the classification of work actually performed, without regard to skill, except as provided in 29 CFR 5.5(a)(4). Laborers or mechanics performing work in more than one classification may be compensated at the rate specified for each classification for the time actually worked therein: Provided, That the employer's payroll records accurately set forth the time spent in each classification in which work is performed. The wage determination (including any additional classification and wage rates conformed under 29 CFR 5.5(a)(1)(ii) and the Davis-Bacon poster (WH-1321) shall be posted at all times by the contractor and its subcontractors at the site of the work in a prominent and accessible, place where it can be easily seen by the workers.

(ii) (a) Any class of laborers or mechanics which is not listed in the wage determination and which is to be employed under the contract shall be classified in conformance with the wage determination. HUD shall approve an additional classification and wage rate and fringe benefits therefor only when the following criteria have been met:

(1) The work to be performed by the classification requested is not performed by a classification in the wage determination; and

(2) The classification is utilized in the area by the construction industry; and

(3) The proposed wage rate, including any bona fide fringe benefits, bears a reasonable relationship to the wage rates contained in the wage determination.

(b) If the contractor and the laborers and mechanics to be employed in the classification (if known), or their representatives, and HUD or its designee agree on the classification and wage rate (including the amount designated for fringe benefits where appropriate), a report of the action taken shall be sent by HUD or its designee to the Administrator of the Wage and Hour Division, Employment Standards Administration, U.S. Department of Labor, Washington, D.C. 20210. The Administrator, or an authorized representative, will approve, modify, or disapprove every additional classification action within 30 days of receipt and so advise HUD or its designee or will notify HUD or its designee within the 30-day period that additional time is necessary. (Approved by the Office of Management and Budget under OMB control number 1215-0140.)

(c) In the event the contractor, the laborers or mechanics to be employed in the classification or their representatives, and HUD or its designee do not agree on the proposed classification and wage rate (including the amount designated for fringe benefits, where appropriate), HUD or its designee shall refer the questions, including the views of all interested parties and the recommendation of HUD or its designee, to the Administrator for determination. The Administrator, or an authorized representative, will issue a determination within 30 days of receipt and so advise HUD or its designee or will notify HUD or its designee within the 30-day period that additional time is necessary. (Approved by the Office of Management and Budget under OMB Control Number 1215-0140.)

(d) The wage rate (including fringe benefits where appropriate) determined pursuant to subparagraphs (1)(ii)(b) or (c) of this paragraph, shall be paid to all workers performing work in the classification under this contract from the first day on which work is performed in the classification.

(iii) Whenever the minimum wage rate prescribed in the contract for a class of laborers or mechanics includes a fringe benefit which is not expressed as an hourly rate, the contractor shall either pay the benefit as stated in the wage determination or shall pay another bona fide fringe benefit or an hourly cash equivalent thereof.

(iv) If the contractor does not make payments to a trustee or other third person, the contractor may consider as part

of the wages of any laborer or mechanic the amount of any costs reasonably anticipated in providing bona fide fringe benefits under a plan or program, Provided, That the Secretary of Labor has found, upon the written request of the contractor, that the applicable standards of the Davis-Bacon Act have been met. The Secretary of Labor may require the contractor to set aside in a separate account assets for the meeting of obligations under the plan or program. (Approved by the Office of Management and Budget under OMB Control Number 1215-0140.)

2. Withholding. HUD or its designee shall upon its own action or upon written request of an authorized representative of the Department of Labor withhold or cause to be withheld from the contractor under this contract or any other Federal contract with the same prime contractor, or any other Federally-assisted contract subject to Davis-Bacon prevailing wage requirements, which is held by the same prime contractor so much of the accrued payments or advances as may be considered necessary to pay laborers and mechanics, including apprentices, trainees and helpers, employed by the contractor or any subcontractor the full amount of wages required by the contract In the event of failure to pay any laborer or mechanic, including any apprentice, trainee or helper, employed or working on the site of the work, all or part of the wages required by the contract, HUD or its designee may, after written notice to the contractor, sponsor, applicant, or owner, take such action as may be necessary to cause the suspension of any further payment, advance, or guarantee of funds until such violations have ceased. HUD or its designee may, after written notice to the contractor, disburse such amounts withheld for and on account of the contractor or subcontractor to the respective employees to whom they are due. The Comptroller General shall make such disbursements in the case of direct Davis-Bacon Act contracts.

3. (i) Payrolls and basic records. Payrolls and basic records relating thereto shall be maintained by the contractor during the course of the work preserved for a period of three years thereafter for all laborers and mechanics working at the site of the work. Such records shall contain the name, address, and social security number of each such worker, his or her correct classification, hourly rates of wages paid (including rates of contributions or costs anticipated for bona fide fringe benefits or cash equivalents thereof of the types described in Section l(b)(2)(B) of the Davis-bacon Act), daily and weekly number of hours worked, deductions made and actual wages paid. Whenever the Secretary of Labor has found under 29 CFR 5.5 (a)(1)(iv) that the wages of any laborer or mechanic include the amount of any costs reasonably anticipated in providing benefits under a plan or program described in Section l(b)(2)(B) of the Davis-Bacon Act, the contractor shall maintain records which show that the commitment to provide such benefits is enforceable, that the plan or program is financially responsible, and that the plan or program has been communicated in writing to the laborers or mechanics affected, and records which show the costs anticipated or the actual cost incurred in providing such benefits. Contractors employing apprentices or trainees under approved programs shall maintain written evidence of the registration of apprenticeship programs and certification of trainee programs, the registration of the apprentices and trainees, and the ratios and wage rates prescribed in the applicable programs. (Approved by the Office of Management and Budget under OMB Control Numbers 1215-0140 and 1215-0017.)

(ii) (a) The contractor shall submit weekly for each week in which any contract work is performed a copy of all payrolls to HUD or its designee if the agency is a party to the contract, but if the agency is not such a party, the contractor will submit the payrolls to the applicant sponsor, or owner, as the case may be, for transmission to HUD or its designee. The payrolls submitted shall set out accurately and completely all of the information required to be maintained under 29 CFR 5.5(a)(3)(i) except that full social security numbers and home addresses shall not be included on weekly transmittals. Instead the payrolls shall only need to include an individually identifying number for each employee (e.g., the last four digits of the employee's social security number). The required weekly payroll information may be submitted in any form desired. Optional Form WH-347 is available for this purpose from the Wage and Hour Division Web site at *http://www.dol.gov/esa/whd/forms/wh347instr.htm* or its successor site. The prime contractor is responsible for the submission of copies of payrolls by all subcontractors. Contractors and subcontractors shall maintain the full social security number and current address of each covered worker, and shall provide them upon request to HUD or its designee if the agency is a party to the contract, but if the agency is not such a party, the contractor will submit the payrolls to the applicant sponsor, or owner, as the case may be, for transmission to HUD or its designee, the contractor, or the Wage and Hour Division of the Department of Labor for purposes of an investigation or audit of compliance with prevailing wage requirements. It is not a violation of this subparagraph for a prime contractor to require a subcontractor to provide addresses and social security numbers to the prime contractor for its own records, without weekly submission to HUD or its designee. (Approved by the Office of Management and Budget under OMB Control Number 1215-0149.)

(b) Each payroll submitted shall be accompanied by a "Statement of Compliance," signed by the contractor or subcontractor or his or her agent who pays or supervises the payment of the persons employed under the contract and shall certify the following:

(1) That the payroll for the payroll period contains the information required to be provided under 29 CFR 5.5 (a)(3)(ii), the appropriate information is being maintained under 29 CFR 5.5(a)(3)(i), and that such information is correct and complete;

(2) That each laborer or mechanic (including each helper, apprentice, and trainee) employed on the contract during the payroll period has been paid the full weekly wages earned, without rebate, either directly or indirectly, and that no deductions have been made either directly or indirectly from the full wages earned, other than permissible deductions as set forth in 29 CFR Part 3;

(3) That each laborer or mechanic has been paid not less than the applicable wage rates and fringe benefits or cash equivalents for the classification of work performed, as specified in the applicable wage determination incorporated into the contract.

(c) The weekly submission of a properly executed certification set forth on the reverse side of Optional Form WH-347 shall satisfy the requirement for submission of the "Statement of Compliance" required by subparagraph A.3.(ii)(b).

(d) The falsification of any of the above certifications may subject the contractor or subcontractor to civil or criminal prosecution under Section 1001 of Title 18 and Section 231 of Title 31 of the United States Code.

(iii) The contractor or subcontractor shall make the records required under subparagraph A.3.(i) available for inspection, copying, or transcription by authorized representatives of HUD or its designee or the Department of Labor, and shall permit such representatives to interview employees during working hours on the job. If the contractor or subcontractor fails to submit the required records or to make them available, HUD or its designee may, after written notice to the contractor, sponsor, applicant or owner, take such action as may be necessary to cause the suspension of any further payment, advance, or guarantee of funds. Furthermore, failure to submit the required records upon request or to make such records available may be grounds for debarment action pursuant to 29 CFR 5.12.

4. Apprentices and Trainees.

(i) Apprentices. Apprentices will be permitted to work at less than the predetermined rate for the work they performed when they are employed pursuant to and individually registered in a bona fide apprenticeship program registered with the U.S. Department of Labor, Employment and Training Administration, Office of Apprenticeship Training, Employer and Labor Services, or with a State Apprenticeship Agency recognized by the Office, or if a person is employed in his or her first 90 days of probationary employment as an apprentice in such an apprenticeship program, who is not individually registered in the program, but who has been certified by the Office of Apprenticeship Training, Employer and Labor Services or a State Apprenticeship Agency (where appropriate) to be eligible for probationary employment as an apprentice. The allowable ratio of apprentices to journeymen on the job site in any craft classification shall not be greater than the ratio permitted to the contractor as to the entire work force under the registered program. Any worker listed on a payroll at an apprentice wage rate, who is not registered or otherwise employed as stated above, shall be paid not less than the applicable wage rate on the wage determination for the classification of work actually performed. In addition, any apprentice performing work on the job site in excess of the ratio permitted under the registered program shall be paid not less than the applicable wage rate on the wage determination for the work actually performed. Where a contractor is performing construction on a project in a locality other than that in which its program is registered, the ratios and wage rates (expressed in percentages of the journeyman's hourly rate) specified in the contractor's or subcontractor's registered program shall be observed. Every apprentice must be paid at not less than the rate specified in the registered program for the apprentice's level of progress, expressed as a percentage of the journeymen hourly rate specified in the applicable wage determination. Apprentices shall be paid fringe benefits in accordance with the provisions of the apprenticeship program. If the apprenticeship program does not specify fringe benefits, apprentices must be paid the full amount of fringe benefits listed on the wage determination for the applicable classification. If the Administrator determines that a different practice prevails for the applicable apprentice classification, fringes shall be paid in accordance with that determination. In the event the Office of Apprenticeship Training, Employer and Labor Services, or a State Apprenticeship Agency recognized by the Office, withdraws approval of an apprenticeship program, the contractor will no longer be permitted to utilize apprentices at less than the applicable predetermined rate for the work performed until an acceptable program is approved.

(ii) Trainees. Except as provided in 29 CFR 5.16, trainees will not be permitted to work at less than the predetermined rate for the work performed unless they are employed pursuant ',to and individually registered in a program which has received prior approval, evidenced by formal certification by the U.S. Department of Labor, Employment and Training Administration. The ratio of trainees to journeymen on the job site shall not be greater than permitted under the plan approved by the Employment and Training Administration. Every trainee must be paid at not less than the rate specified in the approved program for the trainee's level of progress, expressed as a percentage of the journeyman hourly rate specified in the applicable wage determination. Trainees shall be paid fringe benefits in accordance with the provisions of the trainee program. If the trainee program does not mention fringe benefits, trainees shall be paid the full amount of fringe benefits listed on the wage determination unless the Administrator of the Wage and Hour Division determines that there is an apprenticeship program associated with the corresponding journeyman wage rate on the wage determination which provides for less than full fringe benefits for apprentices. Any employee listed on the payroll at a trainee rate who is not registered and participating in a training plan approved by

the Employment and Training Administration shall be paid not less than the applicable wage rate on the wage determination for the work actually performed. In addition, any trainee performing work on the job site in excess of the ratio permitted under the registered program shall be paid not less than the applicable wage rate on the wage determination for the work actually performed. In the event the Employment and Training Administration withdraws approval of a training program, the contractor will no longer be permitted to utilize trainees at less than the applicable predetermined rate for the work performed until an acceptable program is approved.

(iii) Equal employment opportunity. The utilization of apprentices, trainees and journeymen under 29 CFR Part 5 shall be in conformity with the equal employment opportunity requirements of Executive Order 11246, as amended, and 29 CFR Part 30.

5. Compliance with Copeland Act requirements. The contractor shall comply with the requirements of 29 CFR Part 3 which are incorporated by reference in this contract

6. Subcontracts. The contractor or subcontractor will insert in any subcontracts the clauses contained in subparagraphs 1 through 11 in this paragraph A and such other clauses as HUD or its designee may by appropriate instructions require, and a copy of the applicable prevailing wage decision, and also a clause requiring the subcontractors to include these clauses in any lower tier subcontracts. The prime contractor shall be responsible for the compliance by any subcontractor or lower tier subcontractor with all the contract clauses in this paragraph.

7. Contract termination; debarment. A breach of the contract clauses in 29 CFR 5.5 may be grounds for termination of the contract and for debarment as a contractor and a subcontractor as provided in 29 CFR 5.12.

8. Compliance with Davis-Bacon and Related Act Requirements. All rulings and interpretations of the Davis-Bacon and Related Acts contained in 29 CFR Parts 1, 3, and 5 are herein incorporated by reference in this contract

9. Disputes concerning labor standards. Disputes arising out of the labor standards provisions of this contract shall not be subject to the general disputes clause of this contract. Such disputes shall be resolved in accordance with the procedures of the Department of Labor set forth in 29 CFR Parts 5, 6, and 7. Disputes within the meaning of this clause include disputes between the contractor (or any of its subcontractors) and HUD or its designee, the U.S. Department of Labor, or the employees or their representatives.

10. (i) Certification of Eligibility. By entering into this contract the contractor certifies that neither it (nor he or she) nor any person or firm who has an interest in the contractor's firm is a person or firm ineligible to be awarded Government contracts by virtue of Section 3(a) of the Davis-Bacon Act or 29 CFR 5.12(a)(1) or to be awarded HUD contracts or participate in HUD programs pursuant to 24 CFR Part 24.

(ii) No part of this contract shall be subcontracted to any person or firm ineligible for award of a Government contract by virtue of Section 3(a) of the Davis-Bacon Act or 29 CFR 5.12(a)(1) or to be awarded HUD contracts or participate in HUD programs pursuant to 24 CFR Part 24.

(iii) The penalty for making false statements is prescribed in the U.S. Criminal Code, 18 U.S.C. 1001. Additionally, U.S. Criminal Code, Section 1 01 0, Title 18, U.S.C., "Federal Housing Administration transactions", provides in part: "Whoever, for the purpose of . . . influencing in any way the action of such Administration..... makes, utters or publishes any statement knowing the same to be false..... shall be fined not more than $5,000 or imprisoned not more than two years, or both."

11. Complaints, Proceedings, or Testimony by Employees. No laborer or mechanic to whom the wage, salary, or other labor standards provisions of this Contract are applicable shall be discharged or in any other manner discriminated against by the Contractor or any subcontractor because such employee has filed any complaint or instituted or caused to be instituted any proceeding or has testified or is about to testify in any proceeding under or relating to the labor standards applicable under this Contract to his employer.

B. Contract Work Hours and Safety Standards Act. The provisions of this paragraph B are applicable where the amount of the prime contract exceeds $100,000. As used in this paragraph, the terms "laborers" and "mechanics" include watchmen and guards.

(1) Overtime requirements. No contractor or subcontractor contracting for any part of the contract work which may require or involve the employment of laborers or mechanics shall require or permit any such laborer or mechanic in any workweek in which the individual is employed on such work to work in excess of 40 hours in such workweek unless such laborer or mechanic receives compensation at a rate not less than one and one-half times the basic rate of pay for all hours worked in excess of 40 hours in such workweek.

(2) Violation; liability for unpaid wages; liquidated damages. In the event of any violation of the clause set forth in subparagraph (1) of this paragraph, the contractor and any subcontractor responsible therefor shall be liable for the unpaid wages. In addition, such contractor and subcontractor shall be liable to the United States (in the case of work done under contract for the District of Columbia or a territory, to such District or to such territory), for liquidated damages. Such liquidated damages shall be computed with respect to each individual laborer or mechanic, including watchmen and guards, employed in violation of the clause set forth in subparagraph (1) of this paragraph, in the sum of $10 for each calendar day on which such individual was required or permitted to work in excess of the standard workweek of 40 hours without payment of the overtime wages required by the clause set forth in sub paragraph (1) of this paragraph.

(3) Withholding for unpaid wages and liquidated damages. HUD or its designee shall upon its own action or upon written request of an authorized representative of the Department of Labor withhold or cause to be withheld, from any moneys payable on account of work performed by the contractor or subcontractor under any such contract or any other Federal contract with the same prime contract, or any other Federally-assisted contract subject to the Contract Work Hours and Safety Standards Act which is held by the same prime contractor such sums as may be determined to be necessary to satisfy any liabilities of such contractor or subcontractor for unpaid wages and liquidated damages as provided in the clause set forth in subparagraph (2) of this paragraph.

(4) Subcontracts. The contractor or subcontractor shall insert in any subcontracts the clauses set forth in subparagraph (1) through (4) of this paragraph and also a clause requiring the subcontractors to include these clauses in any lower tier subcontracts. The prime contractor shall be responsible for compliance by any subcontractor or lower tier subcontractor with the clauses set forth in subparagraphs (1) through (4) of this paragraph.

C. Health and Safety. The provisions of this paragraph C are applicable where the amount of the prime contract exceeds $100,000.

(1) No laborer or mechanic shall be required to work in surroundings or under working conditions which are unsanitary, hazardous, or dangerous to his health and safety as determined under construction safety and health standards promulgated by the Secretary of Labor by regulation.

(2) The Contractor shall comply with all regulations issued by the Secretary of Labor pursuant to Title 29 Part 1926 and failure to comply may result in imposition of sanctions pursuant to the Contract Work Hours and Safety Standards Act, (Public Law 91-54, 83 Stat 96). 40 USC 3701 et seq.

(3) The contractor shall include the provisions of this paragraph in every subcontract so that such provisions will be binding on each subcontractor. The contractor shall take such action with respect to any subcontractor as the Secretary of Housing and Urban Development or the Secretary of Labor shall direct as a means of enforcing such provisions.

EXHIBIT B

EXHIBIT B - HIGHWAY

General Decision Number: IL160011 03/11/2016 IL11

Superseded General Decision Number: IL20150011

State: Illinois

Construction Types: Heavy and Highway

Counties: Boone, De Kalb, Du Page, Kane, Kendall, Lake, McHenry and Will Counties in Illinois.

HEAVY AND HIGHWAY CONSTRUCTION PROJECTS (does not include landscape projects).

Note: Under Executive Order (EO) 13658, an hourly minimum wage of $10.15 for calendar year 2016 applies to all contracts subject to the Davis-Bacon Act for which the solicitation was issued on or after January 1, 2015. If this contract is covered by the EO, the contractor must pay all workers in any classification listed on this wage determination at least $10.15 (or the applicable wage rate listed on this wage determination, if it is higher) for all hours spent performing on the contract in calendar year 2016. The EO minimum wage rate will be adjusted annually. Additional information on contractor requirements and worker protections under the EO is available at www.dol.gov/whd/govcontracts.

Modification Number	Publication Date
0	01/08/2016
1	03/11/2016

CARP0555-003 06/01/2015

DUPAGE ANE LAKE COUNTIES

	Rates	Fringes
CARPENTER.....	$ 44.35	28.81

CARP0555-008 06/01/2015

WILL COUNTY

	Rates	Fringes
Carpenter and Piledriver.....	$ 43.35	31.09

CARP0555-011 06/01/2015

KANE, McHENRY (North of Hwy 52), AND KENDALL COUNTIES

	Rates	Fringes
Carpenter and Piledriver.....	$ 44.35	31.09

CARP0790-003 06/01/2015

DE KALB COUNTY

EXHIBIT B - HIGHWAY

```
                                  Rates          Fringes

CARPENTER.......................$ 39.11            25.81
----------------------------------------------------------------
 CARP0790-004 06/01/2015

CARROLL, JO DAVIESS, LEE, OGLE (Oregon and South thereof),
STEPHENSON, and WHITESIDE COUNTIES


                                  Rates          Fringes

CARPENTER.......................$ 39.11            25.81
----------------------------------------------------------------
 CARP0792-003 06/01/2015

BOONE COUNTY

                                  Rates          Fringes

CARPENTER.......................$ 43.00            21.92
----------------------------------------------------------------
 ELEC0009-002 06/01/2015

WILL COUNTY

                                  Rates          Fringes

Line Construction
     Groundman..................$ 37.05            22.71
     Lineman and Equipment
     Operator...................$ 47.50            29.12
----------------------------------------------------------------
 ELEC0117-001 06/01/2015

KANE (Northern Half) and McHENRY (All) COUNTIES

                                  Rates          Fringes

ELECTRICIAN.....................$ 44.62            29.47
----------------------------------------------------------------
 ELEC0150-001 06/01/2015

LAKE COUNTY

                                  Rates          Fringes

ELECTRICIAN.....................$ 39.40            34.58
----------------------------------------------------------------
 ELEC0176-011 06/01/2013

WILL COUNTY

                                  Rates          Fringes

ELECTRICIAN.....................$ 39.50            33.75
----------------------------------------------------------------
* ELEC0196-001 02/28/2016

BOONE, DEKALB, DUPAGE, KANE, KENDALL, LAKE, and MCHENRY COUNTIES
```

EXHIBIT B - HIGHWAY

```
                                  Rates          Fringes

Line Construction
     Equipment Operator..........$ 40.59          18.56+A
     Groundman...................$ 31.39          15.49+A
     Lineman, Substation
     Technician, Cable Splicing
     Technician, Digger
     Operator, Crane Opertor 20
     tons and above, and Signal
     Technician..................$ 48.59          21.18+A

  FOOTNOTE:  A.  PAID HOLIDAYS:  Memorial Day, Independence
  Day, Labor Day, and Thanksgiving Day

----------------------------------------------------------------
 ELEC0364-003 06/01/2015

BOONE (All) & DEKALB (Remainder) COUNTIES

                                  Rates          Fringes

ELECTRICIAN.....................$ 44.00            29.45
----------------------------------------------------------------
 ELEC0461-006 06/01/2015

DEKALB (Sandwich TWP), KANE (Southern Half) & KENDALL (All)
COUNTIES


                                  Rates          Fringes

ELECTRICIAN.....................$ 47.25            25.75
----------------------------------------------------------------
 ELEC0701-001 06/01/2015

DUPAGE COUNTY

                                  Rates          Fringes

ELECTRICIAN.....................$ 38.74            35.67
----------------------------------------------------------------
 ENGI0150-015 06/01/2015

BOONE and DE KALB COUNTIES

                                  Rates          Fringes

OPERATOR:  Power Equipment
     Group 1.....................$ 43.65            33.00
     Group 2.....................$ 43.10            33.00
     Group 3.....................$ 41.80            33.00
     Group 4.....................$ 40.35            33.00
     Group 5.....................$ 38.90            33.00

POWER EQUIPMENT OPERATOR CLASSIFICATIONS

  GROUP 1: Asphalt Plant; Asphalt Heater and Planer
  combination; Asphalt Spreader; Asphalt Silo Tender;
  Autograder, GOMACO or similar; Belt Loader; Caisson Rigs;
```

EXHIBIT B - HIGHWAY

Car Dumper, Central Redi-Mix Plant; Combination Backhoe Front End Loader Machine (1 cu yd or over Backhoe bucket with attachments); Backhoe with Shear attachment; Concrete Breaker (truck mounted); Concrete Conveyor; Concrete Paver over 27E cu ft; Concrete Placer; Concrete Tube Float; Cranes, all attachments; Cranes, Hammerhead, Linden, Peco and machines of a like nature; Creter Crane; Crusher, stone; Derricks; Derrick Boats; Derricks, traveling; Dredges; Field Mechanic Welder; Formless Curb and Gutter Machine; Gradall and machines of a like nature; Grader, Elevating; Grader, Motor Grader, Motor Patrol, Auto Patrol, Form Grader, Pull Grader, Subgrader; Guard Rail Post Driver mounted; Hoists, one, two, and three Drum; Hydraulic Backhoes; Locomotive, all Mucking Machine; Pile Drivers and Skid Rig; Pre-Stress Machine; Pump Cretes Dual Ram; Rock Drill-Crawler or Skid Rig; Rock Drill truck mounted; Roto Mill Grinder, 36" and over; Roto Mill Grinder, less than 36"; Slip- Form Paver; Soil Test Drill Rig, truck mounted; Straddle Buggies; GCI Crane and similar; Hydraulic Telescoping Form (tunnel); Tie Back MAchine; Tractor Drawn Belt Loader: Tractor Drawn Belt Loader with attached Pusher; Tractor with boom; Tractaire with attachment; Traffic Barrier Conveyor Machine; Raised or Blind Hoe Drill (Tunnel & Shaft); Trenching Machine; Truck Mounted Concrete Pump with boom; Truck mounted Concrete Conveyor; Underground Boring and/or Mining Machines under 5 ft; Wheel Excavator & Widener (Apsco)

GROUP 2: Batch Plant; Bituminous Mixer; Bobcats over .75 cu yd; Boiler and Throttle Valve; Bulldozer; Car Loader Trailing Conveyors; Combination Backkhoe Front End Loader Machine, less than 1 cu yd Backhoe Bucket with attachments; Compressor and Throttle Valve; Compressor, common receiver (3); Concrete Breaker or Hydro Hammer; Concrete Grinding Machine; Concrete Mixer or Paver 7S series to and including 27 cu ft; Concrete Spreader; Concrete Curing Machine, Burlap Machine; Belting Machine and Sealing Machine; Conveyor Muck Cars (Haglund or similar type); Finishing Machine-Concrete; Greaser Engineer; Highlift Shovels or Front End Loader; Hoist-Sewer Dragging Machine; Hydraulic Boom Trucks, all attachments; Locomotives, Dinky; Pump Cretes, Squeeze Cretes-Screw Type pumps, Gypsum Bulker and Pump; Roller Asphalt; Rotary Snow Plows; Rototiller, Seaman, etc self-Propelled; Scoops-Tractor Drawn; Self-propelled Compactor; Spreader-Chip- Stone etc; Scraper; Scraper-Prime Mover in Tandem regardless of size (add $1.00 to to Group 2 hourly rate for each hour and for each machine attached thereto); Tank Car Heater; Tractors, Push, pulling Sheeps Foot, Disc, or Compactor, etc; Tug Boats

GROUP 3: Boilers; Brooms, all power propelled; Cement Supply Tender; Compressor, Common Receiver (2); Concrete Mixer, two bag and over; Conveyor, Portable; Farm type Tractors used for mowing, seeding, etc; Fireman on Boilers; Forklift Trucks; Grouting Machines; Hoists, Automatic; Hoists, all Elevators; Hoists, Tugger single Drum; Jeep Diggers; Pipe Jacking Machines; Post- hole Digger; Power Saw, Concrete, Power Driven; Pug Mills; Rollers, other than asphalt; Seed and Straw Blower; Steam Generators; Stump Machine; Winch Trucks with A-Frame; Work Boats; Tamper-Form motor driven

EXHIBIT B - HIGHWAY

GROUP 4: Air compressor - Small 185 and under (1 to 5 not to exceed a total of 300 ft); Air Compressor - Large over 185; Asphalt Spreader Backend Man; Combination - Small Equipment Operator; Generators - Small 50 kw and under; Generators - Large , over 50 kw; Heaters, Mechanical; Hydraulic power unit (Pile Driving, Extracting or Drilling); Light Plants All (1 to 5); Pumps, over 3" (1 to 3, not to exceed a total of 300 ft); Pumps, Well Points; Tractaire; Welding Machines (2 through 5); Winches, 4 small electric drill winches; Bobcats up to and including .75 cu yd

GROUP 5: Oilers

PREMIUM PAY:

Long Boom :
Cranes & Derricks 90' to 150' including jib receive an extra $.50 per hour. Cranes & Derricks over 150' including jib receive an extra $.50 per hour plus an additional $.10 for each additional 10' of boom or jib.

Capacity Pay: Cranes & Derricks with maximum capacity exceeding 50 ton with less than 90' of boom or jib shall be compensated $.01 per hour for each ton of the rated capacity in excess of 50 ton.

Long Boom pay and Capacity pay cannot be combined.

Crane mounted earth auger, raised and blind hole drills, and truck mounted drill rigs receive an extra $.50 per hour.

Creter Cranes:
When the Creter Crane is equipped with a conveyor system capable of extending 70' or more, the engineer shall receive an extra $.50 per hour.

Truck Mounted Concrete Pumps:
When the Truck Mounted Concrete Pump is equipped with a boom, which is capable of extending 90' or more, the engineer shall receive $.50 per hour extra.

Truck Mounted Concrete Conveyor:
Truck Mounted Concrete Conveyors equipped with conveyors that are capable of extending 90' or more, the engineer shall receive an extra $.50 per hour.

Underground Work:
Employees working in tunnels, shafts, etc. shall be paid an additional $.40 per hour. Employees working under air pressure 1/2 pound to 7 pounds shall receive an additional $.50 per hour. Employees working under air pressure of 7 pounds or over shall receive $.65 per hour more.

Mining Machines- Boring Machines:
The crew operating and maintaining the Mining Machines shall be compensated an additional $.50 per hour.

---

* ENGI0150-024 06/01/2015

DUPAGE, KANE, KENDALL, LAKE, McHENRY, and WILL COUNTIES

EXHIBIT B - HIGHWAY

	Rates	Fringes
OPERATOR: Power Equipment		
GROUP 1	$ 46.30	33.35
GROUP 2	$ 45.75	33.35
GROUP 3	$ 43.70	33.35
GROUP 4	$ 42.30	33.35
GROUP 5	$ 41.10	33.35

POWER EQUIPMENT OPERATOR CLASSIFICATIONS

GROUP 1: Asphalt Plant*; Asphalt Heater and Planer combination; Asphalt Heater Scarfire*, Asphalt Spreader; Autograder/ GOMACO or similar; ABG Paver*, Backhoes with Caisson attachment*, Ballast Regulator, Belt Loader*; Caisson Rigs*Car Dumper, Central Redi-Mix Plant*, Combination Backhoe; Front End Loader Machine (1 cu yd or over Backhoe bucket or with attachments); Concrete Breaker (truck mounted); Concrete Conveyor; Concrete Paver over 27E cu ft*; Concrete Placer*; Concrete Tube Float; Cranes, all attachments*; Cranes, Hammerhead, Linden, Peco and machines of a like nature*; Creter Crane; Crusher, stone; All Derricks; Derrick Boats; Derricks, traveling*; Dowell Machine with Air Compressor ($1.00 above Class 1); Dredges*; Field Mechanic Welder; Formless Curb and Gutter Machine*; Gradall and machines of a like nature*; Grader, Elevating; Grader, Motor Grader, Motor Patrol, Auto Patrol, Form Grader, Pull Grader, Subgrader; Guard Rail Post Driver mounted*; Hoists, one, two, and three Drum; Hydraulic Backhoes*; Backhoes with Shear attachments*; Mucking Machine; Pile Drivers and Skid Rig*; Pre-Stress Machine; Pump Cretes Dual Ram (requires frequent lubrication and water)*; Rock Drill- Crawler or Skid Rig*; Rock Drill truck mounted*; Rock/ Track Tamper; Roto Mill Grinder, (36" and over)*; Slip-Form Paver*; Soil Test Drill Rig, truck mounted*; Straddle Buggies; Hydraulic Telescoping Form (tunnel); Tractor Drawn Belt Loader*; Tractor Drawn Belt Loader with attached Pusher (two engineers); Tractor with boom; Tractaire with attachment; Traffic Barrier Transfer Machine*; Trenching Machine; Truck Mounted Concrete Pump with boom*; Underground Boring and/or Mining Machines 5 ft in diameter and over tunnel, etc.*; Wheel Excavator* & Widener (Apsco); Raised or Blind Hoe Drill, Tunnel & Shaft*

GROUP 2: Batch Plant*; Bituminous Mixer; Boiler and Throttle Valve; Bulldozer; Car Loader Trailing Conveyors; Combination Backkhoe Front End Loader Machine, (less than 1 cu yd Backhoe Bucket with attachments); Compressor and Throttle Valve; Compressor, common receiver (3); Concrete Breaker or Hydro Hammer; Concrete Grinding Machine; Concrete Mixer or Paver 7S series to and including 27 cu ft; Concrete Spreader; Concrete Curing Machine; Burlap Machine; Belting Machine and Sealing Machine; Concrete Wheel Saw; Conveyor Muck Cars (Haglund or similar type); Drills (all); Finishing Machine-Concrete; Greaser Engineer; Highlift Shovels or Front End Loader; Hoist- Sewer Dragging Machine; Hydraulic Boom Trucks, all attachments; Hydro-Blaster (requires two operators); Laser Screed*; Locomotives, Dinky; Off-Road Hauling Units (including

EXHIBIT B - HIGHWAY

articulating); Pump Cretes; Squeeze Cretes-Screw Type pumps, Gypsum Bulker and Pump; Roller Asphalt; Rotary Snow Plows; Rototiller, Seaman, self-Propelled; Scoops-Tractor Drawn; Self- propelled Compactor; Spreader-Chip-Stone; Scraper; Scraper-Prime Mover in Tandem regardless of size (add $1.00 to Group 2 hourly rate for each hour and for each machine attached thereto add $1.00 to Group 2 hourly rate for each hour); Tank Car Heater; Tractors, Push, pulling Sheeps Foot, Disc, or Compactor, etc; Tug Boats

GROUP 3: Boilers; Brooms, all power propelled; Cement Supply Tender; Compressor, Common Receiver (2); Concrete Mixer, two bag and over; Conveyor, Portable; Farm type Tractors used for mowing, seeding, etc; Fireman on Boilers; Forklift Trucks; Grouting Machines; Hoists, Automatic; Hoists, all Elevators; Hoists, Tugger single Drum; Jeep Diggers; Low Boys; Pipe Jacking Machines; Post-hole Digger; Power Saw, Concrete, Power Driven; Pug Mills; Rollers, other than asphalt; Seed and Straw Blower; Steam Generators; Stump Machine; Winch Trucks with A-Frame; Work Boats; Tamper-Form motor driven

GROUP 4: Air compressor - Small 250 and under (1 to 5 not to exceed a total of 300 ft); Air Compressor - Large over 250; Combination - Small Equipment Operator; Directional Boring Machine; Generators - Small 50 kw and under; Generators - Large , over 50 kw; Heaters, Mechanical; Hydraulic power unit (Pile Driving, Extracting or Drilling); Light Plants (1 to 5); Pumps, over 3" (1 to 3, not to exceed a total of 300 ft); Pumps, Well Points; Tractaire; Welding Machines (2 through 5); Winches, 4 small electric drill winches;

GROUP 5: Bobcats (All); Brick Forklifts; Oilers; Directional Boring

*Requires Oiler

IRON0001-014 06/01/2015

DU PAGE (Eastern 1/4), LAKE, AND MCHENRY (Hebron, Woodstock, and East thereof) COUNTIES

	Rates	Fringes
IRONWORKER		
Sheeter	$ 44.45	35.54
Structural and Reinforcing	$ 44.20	35.54

IRON0063-003 06/01/2015

LAKE, DUPAGE (Eastern 1/4) and McHENRY (HEBRON, WOODSTOCK & EAST THEREOF) COUNTIES

	Rates	Fringes
IRONWORKER, ORNAMENTAL	$ 45.00	32.14

IRON0498-003 06/01/2015

EXHIBIT B - HIGHWAY

BOONE, DEKALB (EXCEPT Southeast), and MCHENRY (Northwest) COUNTIES

	Rates	Fringes
IRONWORKER	$ 36.29	33.93

LABO0002-004 06/01/2015

DUPAGE COUNTY

	Rates	Fringes
LABORER (SEWER CONSTRUCTION)		
GROUP 1	$ 39.20	25.20
GROUP 2	$ 39.33	25.20
GROUP 3	$ 39.43	25.20
GROUP 4	$ 39.55	25.20
GROUP 5	$ 39.20	25.20

LABORER CLASSIFICATIONS

GROUP 1: Signalmen Top Laborers, and all other Laborers not Mentioned.

GROUP 2: Concrete Laborers; Steel Setters.

GROUP 3: Cement Carriers; Cement Mixers; Concrete Repairmen; Mortar Men; Scaffold Men; and Second Bottom Men.

GROUP 4: Bottom Men; Bracers-Bracing; Bricklayer's Tender; Catch Basin Digger; Drainlayer; Dynamiter; Form Men; Jackhammermen; Powerpac; Pipelayers; Rodders; Welders & Burners; Well Point System Men.

GROUP 5: Asbestos Abatement Laborers, Toxic and Hazardous Waste Removal Laborers & Dosimeter use (any device) Monitoring Nuclear Exposure.

LABO0002-009 06/01/2015

DU PAGE COUNTY

	Rates	Fringes
LABORER (Compressed Air)		
0 - 15 lbs	$ 40.20	25.20
16 - 20 lbs	$ 40.70	25.20
21 - 26 lbs	$ 41.20	25.20
27 - 33 lbs	$ 42.20	25.20
34 lbs and over	$ 43.20	25.20
LABORER (Tunnel and Sewer)		
GROUP 1	$ 39.20	25.20
GROUP 2	$ 39.33	25.20
GROUP 3	$ 39.43	25.20
GROUP 4	$ 39.55	25.20
GROUP 5	$ 39.20	25.20

EXHIBIT B - HIGHWAY

LABORER CLASSIFICATIONS (TUNNEL)

GROUP 1: Cage tenders; Dumpmen; Flagmen; Signalmen; Top laborers

GROUP 2: Air hoist operator; Key board operator; concrete laborer; Grout; Lock tenders (Free Air Side); Steel setters; Tuggers; Switchmen; Car pusher

GROUP 3: Concrete repairmen; Lock tenders (pressure side); Mortar men; Muckers; Grout machine operators; Track layers

GROUP 4: Air trac drill operator; Miner; Bricklayer tenders; Concrete blower operator; Drillers; Dynamiters; Erector operator; Form men; Jackhammermen; Powerpac; Mining machine operators; Mucking machine operator; Laser beam operator; Liner plate and ring setters; Shield drivers; Power knife operator; Welder- burners; Pipe jacking machine operator; skinners; Maintenance technician

GROUP 5: Asbestos abatement laborer; Toxic and hazardous waste removal laborer; Dosimeter (any device) monitoring nuclear exposure

LABORER CLASSIFICATIONS (SEWER)

GROUP 1: Signalmen; Top laborers and All other laborers

GROUP 2: Concrete laborers and Steel setters

GROUP 3: Cement carriers; Cement mixers; Concrete repairmen; Mortar men; Scaffold men; Second Bottom men

GROUP 4: Air trac drill operator; Bottom men; Bracers-bracing; Bricklayer tenders; Catch basin diggers; Drainlayers; dynamiters; Form men; Jackhammermen; Powerpac; Pipelayers; Rodders; Welder-burners; Well point systems men

GROUP 5: Asbestos abatement laborer, Toxic and hazardous waste removal laborer; Dosimeter (any device) monitoring nuclear exposure

---

LABO0032-007 05/01/2015

DE KALB COUNTY

	Rates	Fringes
LABORER		
General Laborer.....	$ 34.34	26.64
Skilled Laborer.....	$ 36.99	26.64

LABORER CLASSIFICATIONS

General Laborer: Carpenter Tender, Tool Cribman, Fireman or Salamander Tender, Flagman, Gravel Box Man, Bumpman & Spotter, Form Handler, Material Handler, Fencing Laborer, Cleaning Lumber, Pit Man, Material Checker, Landscaper, Unloading Explosives, Laying of Sod, Planting of Trees, Asphalt Workers With Machine & Layers, Asphalt Plant

EXHIBIT B - HIGHWAY

Laborer, Wrecking, Fire-proofing, Driving Stakes, Stringlines for All Machinery, Window Cleaning, Demolition Worker, Explosive Handling, Trimming & Removal of Trees, Multi-Plate Pipe, Pilot Cars for Traffic Control, Power Rigging

Skilled Laborer: Asbestos Abatement Worker; Hazardous Waste Worker Handling any Materials with any Foreign Matter Harmful to Skin or Clothing, Track Labor, Cement Handler, Chloride Handler, Unloading & Laborers with Steel Workers & Re-bars, Wet Concrete Workers, Tunnel Tenders in Free Air, Batch Dumper, Mason Tender, Kettle & Tar Man, Tank Cleaner, Plastic Installer, Scaffold Worker, Motorized Buggies or Motorized Unit Used For Wet Concrete or Handling of Building Materials, Laborers With De-Watering Systems, Sewer Workers Plus Depth, Vibrator Operator; Cement Silica, Clay, Fly Ash, Lime & Plasters Handlers (Bulk or Bag); Cofferdam Worker Plus Depth, Concrete Paving, Placing, Cutting & Tying of Reinforcing, Deck Hand, Dredge Hand and Shore Laborer, Bankman on Floating Plant, Grade Checker, Power Tools, Front End Man on Chip Spreader, Caisson Worker Plus Depth, Gunnite Nozzleman, Leadman on Sewer Work, Welder, Cutter, Burner & Torchman, Chain Saw Operator, Jackhammer & Drill Operator, Layout Man and/or Tile Layer, Steel Form Setter - Street & Highway, Air Tamping Hammerman, Signal Man On Crane, Concrete Saw Operator, Screenman on Asphalt Paver, Tending Masons with Hot Material or Where Foreign Materials are used, Mortar Mixer Operator, Multiple Concrete Duct - Leadman, Luteman, Asphalt Raker Curb Asphalt Machine Operator, Ready Mix Scaleman Permanent Portable or Temporart Plant, Laborer Handling Masterplate or Similar Materials, Laser Beam Operator, Concrete Burning Machine Operator, Coring Machine Operator, Plaster Tender, Underpinning & Shoring of Buildings, Pump Man, Manhole & Catch Basin, Dirt & Stone Tamper, Hoseman on Concrete Pump.

LABO0075-002 06/01/2015

WILL COUNTY

	Rates	Fringes
LABORER		
GROUP 1	$ 39.20	25.20
GROUP 2	$ 39.55	25.20
GROUP 3	$ 39.20	25.20
GROUP 4	$ 39.55	25.20
GROUP 5	$ 39.40	25.20
GROUP 6	$ 39.55	25.20
GROUP 7	$ 39.40	25.20

LABORER CLASSIFICATIONS

GROUP 1 - Mortar mixers, handling asphalt shingles; Scaffolds; Sewer and trench work (ground level down to 8 feet); Catch basin and manhole diggers, mesh handling on road work; Cement and mineral filler handler; Concrete puddlers; Batch dumpers (cement & asphalt); Vibrator operators; Sand and stone wheelers to mixer Handlers);

EXHIBIT B - HIGHWAY

Concrete wheelers; Airtamping hammermen; Concrete & paving breakers; Rock drillers/Jackhammermen; Chipping hammermen 1-Bag mixer; Asphalt laborer; Chain and power saws; Pit men; Fencing laborers; Mason tenders (mortar and brick wheeler); Kettlemen & tarmen, tank cleaners; Scaffold and staging laborers; Pot Firemen (tarmen); Heaters tender for any purpose; Water pumps (portable water pumps shall be tended by laborers if the employer determines tending is required); Rip rap; Handling of slab steel road forms in any manner, except road form setting, setting center strips, Contraction and expansion joints (road work); Unloading and handling of lumber, brick, transite materials, cast iron water pipe, reinforced concrete rods, sewer and drain tile, railroad tiles and all other creosoted materials; paving blocks and concrete forms; Handling of insulation of any type; all work involving the unloading of materials, fixtures, or furnishing, whether crated or uncrated; all mortar and composition mixers of sewer work; track laborers; Chimney and silo laborers working at a height of 1 to 48 feet; All laborers working on swinging suspended, or any type or make of scaffolding 1 to 48 feet; All laborers working inside a sphere or any type or make of tank; Working inside a sphere or any type or make of tank from bottom to a height of 48 feet; Form strippers (any type); Mechanical or motorized buggies, for concrete or masons employers; Use of skid steer loads or any other machinery which replaces the wheelbarrow or buggy; Handling multiple concrete duct or any other type of pipe used in public utility work unless otherwise specified herein; Snapping of wall ties and removal of rods; drilling of anchor bolt holes; Concrete or asphalt clipper type saws and self-propelled saws; Shoulder and grade laborers; All hydraulic electric and air or any other type of tools; Grouting and caulking; Cleaning lumber, Nail pulling, Deck hand; Dredgehand; Shore laborer; Bankmen on Floating Plant; Tool and material checkers; Signalmen and Flagmen on all construction work; Cleaning of debris; Removal of trees; Concrete curing, temporary concrete protection regardless of manner or materials used; Laborers on Apsco; Janitorial; Wrecking and demolition laborers

GROUP 2 - Sewer and drain pipe layers and multiple concrete duct or any other type of pipe used, on public utility work (ground level to 8 feet); Pumpcrete pipe handlers

GROUP 3 - Asphalt rakers; Hod carriers; Plasterer laborers; Gunnite laborers, Slab for setters on roads, highways, streets, airport runaways, and radii (any type of form) stringline men for all aforementioned work; Wagon and tower drillers on land and floating plant used on dredging; Asphalt gunners and plug men (undercoating on road work); Mortar pump laborers; Plaster pump laborers

GROUP 4 - Tunnel miners, and all laborers inside tunnel; Air blow pipemen; Torchmen (burners); Mortaring men on sewer and drain pipe (the applying of mortar and composition mixes); All bottom men on sewer work-all sewer and drain pipelayers-multiple concrete duct or any other type of pipe used on public utility work-8 feet or more below ground level, and all other sewer and trench laborers 8 feet or more below ground level regardless of excavation area; All

EXHIBIT B - HIGHWAY

labor work inside cofferdam; Use of a 10 foot or more drill steel for hand held drills; Caisson laborers ground level down 15 feet; All air tools 8 feet or more below ground level; All laborers working on swinging-suspended or any type or make of scaffolds, 48 feet to 100 feet; All chimney and silo laborers working at a height of 48 to 100 feet; All tamping hammers over 150 lbs.; All laborers working inside of a sphere or any type or make of tank at a height of 48 feet to 100 feet; all hydraulic, electric and air tools or any other type 8 feet or more below ground level; Vibrators-any type-8 feet or more below ground level

GROUP 5 - Gunnite nozzle men; Caisson laborers and all tamping hammers from 150 lbs and over; from 15 feet below ground level down to 50 feet; and all laborers working inside of a sphere or any type of tank for every additional 50 feet or part thereof above 100 feet in height

GROUP 6 - All underground cavern laborers; Caisson laborers 50 feet or more below ground level; Laborers working under radio active conditions (suiting up); Blasting men (Powdermen)
GROUP 7 - Dosimeter (any device) used for monitoring nuclear exposure; Asbestos abatement worker; Toxic and hazardous waste removal laborer; and chimney and silo laborers for every additional 50 feet or any part thereof above 100 feet high

---

LABO0149-002 06/01/2015

BOONE, KANE, KENDALL, AND McHENRY COUNTIES

	Rates	Fringes
LABORER		
GROUP 1	$ 39.20	25.20
GROUP 2	$ 39.43	25.20
GROUP 3	$ 39.20	25.20
GROUP 4	$ 39.20	25.20
GROUP 5	$ 39.43	25.20
GROUP 6	$ 39.55	25.20
GROUP 7	$ 39.55	25.20
GROUP 8	$ 39.20	25.20
GROUP 9	$ 39.40	25.20

LABORER CLASSIFICATIONS

GROUP 1: Common laborer, Asphalt laborer, Asphalt plant laborer, Striping laborer, Clipper type concrete saw, Self-propelled saws

GROUP 2: Air tampers & Vibrators

GROUP 3: Mortar & Concrete mixers

GROUP 4: Stringline & form setter; Torchman (demolition), Sheeting & Cribbing, Black top rakers & lutemen, Machine screwmen

GROUP 5: Chain saw man, Jackhammer man, Drillman, Concrete

EXHIBIT B - HIGHWAY

breaders & air spade,

GROUP 6: Tunnel laborers, Tile layers & bottom men

GROUP 7: Caisson diggers, Dynamiters

GROUP 8: Flagman

GROUP 9: Asbestos apatement laborers, Toxic & hazardous waste removal laborers & Dosimeter (any device) monitoring nuclear exposure

---

LABO0152-003 06/01/2015

LAKE COUNTY

	Rates	Fringes
LABORER		
GROUP 1	$ 39.20	25.20
GROUP 2	$ 39.28	25.20
GROUP 3	$ 39.20	25.20
GROUP 4	$ 39.43	25.20
GROUP 5	$ 39.40	25.20
GROUP 6	$ 39.40	25.20

LABORER CLASSIFICATIONS

GROUP 1: General laborers; Asphalt

GROUP 2: Cement gun laborers

GROUP 3: Asphalt Tampers and Smoothers

GROUP 4: Rakers and Lutemen; Machine screwman; Kettlemen; Mixermen, Drum-Men; Jackhammermen (Asphalt); Mite Box Spreaders; Laborers on birch overman and similar spreader equipment; Laborers on apsco; Laborers on Air Compressors; Paving Form Setters; Jackhammerman (Concrete); Power Drive Concrete Saws

GROUP 5: Cement Gun Nozzle (Gunite)

GROUP 6: Asbestos abatement laborers; Toxic and hazardous waste removal laborers; Dosimeter (any device monitoring nuclear exposure)

PAIN0014-003 06/01/2015

LAKE and WILL COUNTIES

	Rates	Fringes
PAINTER: Brush Only	$ 43.05	23.47

PAIN0030-003 07/01/2015

DE KALB, DUPAGE, KANE, KENDALL, AND McHENRY COUNTIES

EXHIBIT B - HIGHWAY

```
                                  Rates          Fringes

PAINTER
     Brush, Sandblaster, and
     Spray.......................$ 42.93           19.85
----------------------------------------------------------------
 PAIN0030-006 07/01/2015

BOONE COUNTY

                                  Rates          Fringes

PAINTER
     Brush, Roller,
     Sandblasting, and Spray.....$ 37.55           20.11
----------------------------------------------------------------
 PLAS0011-002 08/01/2010

WILL COUNTY

                                  Rates          Fringes

CEMENT MASON/CONCRETE FINISHER...$ 41.00           21.03
----------------------------------------------------------------
 PLAS0011-008 06/01/2012

DE KALB, KANE, KENDALL, AND McHENRY COUNTIES

                                  Rates          Fringes

CEMENT MASON/CONCRETE FINISHER...$ 41.55           23.76
----------------------------------------------------------------
 PLAS0011-013 06/01/2011

LAKE COUNTY

                                  Rates          Fringes

CEMENT MASON/CONCRETE FINISHER...$ 40.30           23.28
----------------------------------------------------------------
 PLAS0011-015 06/01/2012

BOONE COUNTY

                                  Rates          Fringes

CEMENT MASON/CONCRETE FINISHER...$ 34.82           20.10
PLASTERER...................$ 33.36           18.95
----------------------------------------------------------------
 PLAS0803-001 08/01/2010

DUPAGE COUNTY

                                  Rates          Fringes

CEMENT MASON/CONCRETE FINISHER...$ 38.00           24.03
----------------------------------------------------------------
* TEAM0179-002 06/01/2015

KENDALL and WILL COUNTIES
```

EXHIBIT B - HIGHWAY

	Rates	Fringes
TRUCK DRIVER		
2 or 3 Axle Trucks	$ 36.45	0.25+a
4 Axle Trucks	$ 36.60	0.25+a
5 Axle Trucks	$ 36.80	0.25+a
6 Axle Trucks	$ 37.00	0.25+a
All Lowboy Trucks	$ 37.20	0.25+a

FOOTNOTE: a. $647.20 per week.

FOOTNOTE: An additional $.20 per axle shall be paid for all vehicles with more than six (6) axles.

CLASSIFICATIONS:

Group 1 - Frame Truck when used for transportation purposes; Air Compressor and Welding Machines, including those pulled by cars, pick-up trucks and tractors; Ambulances; Articulated Dumps; Batch Gate Lockers; Batch Hopperman; Car and Truck Washers; Carry Alls; Forl Lifts and Hoisters; Helpers; Mechanics Helpers and Greasers; Oil Distributors, two-man operation; Pavement Breakers; Pole Trailer, up to 40 feet; Pothole Repair Trucks; Power Mower Tractors; Quick Change Barrier; Self-Propelled Chip Spreader; Shipping and Receiving Clerks and Checkers; Skipman; Slurry Trucks, two-man operation; Slurry Trucks, Conveyor Operated - 2 or 3 man operation; Teamsters; Unskilled Dumpmen; Warehousemen and Dockmen; Truck Drivers hauling warning lights, barricades, and portable toilets on the job site

Group 2 - Dispatcher; Dump Crets and Adgetators under 7 yards; Dumpsters, Track Trucks, Euclids, Hug Bottom Dump Turnapulls or Turnatrailers when pulling other than self-loading equipment or similar equipment under 16 cubic yards; Mixer Trucks under 7 yards; Ready-Mix Plant Hopper Operator; Winch Trucks, 2 Axles

Group 3 - Dump Crets and Adgetators, 7 yards and over; Dumpsters, Track Trucks, Euclids, Hug Bottom Dump Turnapulls or Turnatrailers when pulling other than self-loading equipment or similar equipment over 16 cubic yards; Explosives and/or Fission Material Trucks; Mixer Trucks 7 yards or over; Mobile Cranes while in transit; Oil Distributors, one-man operation; Pole Trailer, over 40 feet; Pole and Expandable Trailers hauling material over 50 feet long;
Slurry Trucks, one-man operation; Winch Trucks, 3 axles or more; Mechanic - *Truck Welder and *Truck Painter*These classifications shall only apply in areas where and when it has been a past area practice; Asphalt Plant Operators in areas where it has been past practice

Group 4 - Dual-purpose vehicels, such as mounted crane tucks with hoist and accessories; Foreman; Master Mechanic; Self-loading equipment like P.B. and trucks with scoops on the front

---

* TEAM0301-001 06/01/2015

LAKE AND MCHENRY COUNTIES

EXHIBIT B - HIGHWAY

	Rates	Fringes
TRUCK DRIVER		
2-3 AXLES	$ 36.21	9.32+a
4 AXLES	$ 36.36	9.32+a
5 AXLES	$ 36.56	9.32+a
6 AXLES	$ 36.76	9.32+a

FOOTNOTE: a. $282.00 per week pension

An additional $.20 per axle shall be paid for all vehicles with more than six (6) axles.

Paid Holidays: New Year's Day, Memorial Day, Independence Day, Labor Day, Thanksgiving Day, and Christmas Day.

900 straight time hours or more in 1 calendar year for the same employer shall receive 1 week paid vacation; 3 years - 2 weeks paid vacation; 10 years - 3 weeks paid vacation; 20 years - 4 weeks paid vacation.

CLASSIFICATIONS:

Group 1 - Frame Truck when used for transportation purposes; Air Compressor and Welding Machines, including those pulled by cars, pick-up trucks and tractors; Ambulances; Articulated Dumps; Batch Gate Lockers; Batch Hopperman; Car and Truck Washers; Carry Alls; Forl Lifts and Hoisters; Helpers; Mechanics Helpers and Greasers; Oil Distributors, two-man operation; Pavement Breakers; Pole Trailer, up to 40 feet; Pothole Repair Trucks; Power Mower Tractors; Quick Change Barrier; Self-Propelled Chip Spreader; Shipping and Receiving Clerks and Checkers; Skipman; Slurry Trucks, two-man operation; Slurry Trucks, Conveyor Operated - 2 or 3 man operation; Teamsters; Unskilled Dumpmen; Warehousemen and Dockmen; Truck Drivers hauling warning lights, barricades, and portable toilets on the job site

Group 2 - Dispatcher; Dump Crets and Adgetators under 7 yards; Dumpsters, Track Trucks, Euclids, Hug Bottom Dump Turnapulls or Turnatrailers when pulling other than self-loading equipment or similar equipment under 16 cubic yards; Mixer Trucks under 7 yards; Ready-Mix Plant Hopper Operator; Winch Trucks, 2 Axles

Group 3 - Dump Crets and Adgetators, 7 yards and over; Dumpsters, Track Trucks, Euclids, Hug Bottom Dump Turnapulls or Turnatrailers when pulling other than self-loading equipment or similar equipment over 16 cubic yards; Explosives and/or Fission Material Trucks; Mixer Trucks 7 yards or over; Mobile Cranes while in transit; Oil Distributors, one-man operation; Pole Trailer, over 40 feet; Pole and Expandable Trailers hauling material over 50 feet long;
Slurry Trucks, one-man operation; Winch Trucks, 3 axles or more; Mechanic - *Truck Welder and *Truck Painter*These classifications shall only apply in areas where and when it has been a past area practice; Asphalt Plant Operators in areas where it has been past practice

EXHIBIT B - HIGHWAY

Group 4 - Dual-purpose vehicels, such as mounted crane tucks with hoist and accessories; Foreman; Master Mechanic; Self-loading equipment like P.B. and trucks with scoops on the front

---

* TEAM0325-004 06/01/2015

BOONE and WINNEBAGO COUNTIES

	Rates	Fringes
TRUCK DRIVER		
2 - 3 Axles	$ 35.87	18.00
4 Axles	$ 36.02	18.00
5 Axles	$ 36.22	18.00
6 Axles	$ 36.33	18.00

FOOTNOTE: An additional $.20 per axle shall be paid for all vehicles with more than six (6) axles.

CLASSIFICATIONS:

Group 1 - Frame Truck when used for transportation purposes; Air Compressor and Welding Machines, including those pulled by cars, pick-up trucks and tractors; Ambulances; Batch Gate Lockers; Batch Hopperman; Car and Truck Washers; Forl Lifts and Hoisters; Helpers;
Mechanics Helpers and Greasers; Oil Distributors, two-man operation; Pavement Breakers
Pole Trailer, up to 40 feet; Power Mower Tractors; Skipman; Slurry Trucks, two-man operation; Teamsters; Truck Drivers hauling warning lights, barricades, and portable toilets on the job site

Group 2 - Dump Crets and Adgetators under 7 yards; Dumpsters, Track Trucks, Euclids, Hug Bottom Dump Turnapulls or Turnatrailers when pulling other than self-loading equipment or similar equipment under 16 cubic yards; Mixer Trucks under 7 yards; Ready-Mix Plant Hopper Operator; Winch Trucks, 2 Axles

Group 3 - Dump Crets and Adgetators, 7 yards and over; Dumpsters, Track Trucks, Euclids, Hug Bottom Dump Turnapulls or Turnatrailers when pulling other than self-loading equipment or similar equipment over 16 cubic yards; Explosives and/or Fission Material Trucks; Mixer Trucks 7 yards or over; Mobile Cranes while in transit; Oil Distributors, one-man operation
Pole Trailer, over 40 feet; Pole and Expandable Trailers hauling material over 50 feet long, additional $0.50 per hour; Slurry Trucks, one-man operation; Winch Trucks, 3 axles or more
*Mechanic*Truck Welder and Truck Painter; *Winter Rate: Between Dec. 15 and Feb. 28 the mechanic and welder rate shall be $2.00 less than the scheduled scale. Truck Painter and Truck Welder classifications shall only apply in areas where and when it has been a past area practice;
Dual-purpose vehicels, such as mounted crane tucks with hoist and accessories

EXHIBIT B - HIGHWAY

Group 4 - Foreman; Master Mechanic; Self-loading equipment like P.B. and trucks with scoops on the front

---

* TEAM0330-002 06/01/2015

DEKALB COUNTY

	Rates	Fringes
TRUCK DRIVER		
2-3 AXLES	$ 35.25	.25+a
4 AXLES	$ 35.40	.25+a
5 AXLES	$ 35.60	.25+a
6 AXLES	$ 35.80	.25+a

FOOTNOTE: a. $695.70 per week

An additional $.20 per axle shall be paid for all vehicles with more than six (6) axles.

Paid Holidays: New Year's Day, Memorial Day, Independence Day, Labor Day, Thanksgiving Day, and Christmas Day.

900 straight time hours or more in 1 calendar year for the same employer shall receive 1 week paid vacation; 3 years - 2 weeks paid vacation; 10 years - 3 weeks paid vacation; 20 years - 4 weeks paid vacation.

CLASSIFICATIONS:

Group 1 - Frame Truck when used for transportation purposes; Air Compressor and Welding Machines, including those pulled by cars, pick-up trucks and tractors; Ambulances; Articulated Dumps; Batch Gate Lockers; Batch Hopperman; Car and Truck Washers; Carry Alls; Forl Lifts and Hoisters; Helpers; Mechanics Helpers and Greasers; Oil Distributors, two-man operation; Pavement Breakers; Pole Trailer, up to 40 feet; Pothole Repair Trucks; Power Mower Tractors; Quick Change Barrier; Self-Propelled Chip Spreader; Shipping and Receiving Clerks and Checkers; Skipman; Slurry Trucks, two-man operation; Slurry Trucks, Conveyor Operated - 2 or 3 man operation; Teamsters; Unskilled Dumpmen; Warehousemen and Dockmen; Truck Drivers hauling warning lights, barricades, and portable toilets on the job site

Group 2 - Dispatcher; Dump Crets and Adgetators under 7 yards; Dumpsters, Track Trucks, Euclids, Hug Bottom Dump Turnapulls or Turnatrailers when pulling other than self-loading equipment or similar equipment under 16 cubic yards; Mixer Trucks under 7 yards; Ready-Mix Plant Hopper Operator; Winch Trucks, 2 Axles

Group 3 - Dump Crets and Adgetators, 7 yards and over; Dumpsters, Track Trucks, Euclids, Hug Bottom Dump Turnapulls or Turnatrailers when pulling other than self-loading equipment or similar equipment over 16 cubic yards; Explosives and/or Fission Material Trucks; Mixer Trucks 7 yards or over; Mobile Cranes while in transit; Oil Distributors, one-man operation; Pole Trailer, over 40

EXHIBIT B - HIGHWAY

feet; Pole and Expandable Trailers hauling material over 50 feet long;
Slurry Trucks, one-man operation; Winch Trucks, 3 axles or more; Mechanic - *Truck Welder and *Truck Painter*These classifications shall only apply in areas where and when it has been a past area practice; Asphalt Plant Operators in areas where it has been past practice

Group 4 - Dual-purpose vehicels, such as mounted crane tucks with hoist and accessories; Foreman; Master Mechanic; Self-loading equipment like P.B. and trucks with scoops on the front

---

* TEAM0673-003 06/01/2015

DU PAGE and KANE COUNTIES

	Rates	Fringes
TRUCK DRIVER		
2-3 AXLES	$ 35.57	.25+a
4 AXLES	$ 35.72	.25+a
5 AXLES	$ 35.92	.25+a
6 AXLES	$ 36.12	.25+a

FOOTNOTE: a. $681.70 per week.

An additional $.20 per axle shall be paid for all vehicles with more than six (6) axles.

Paid Holidays: New Year's Day, Memorial Day, Independence Day, Labor Day, Thanksgiving Day, and Christmas Day.

900 straight time hours or more in 1 calendar year for the same employer shall receive 1 week paid vacation; 3 years - 2 weeks paid vacation; 10 years - 3 weeks paid vacation; 20 years - 4 weeks paid vacation.

CLASSIFICATIONS:

Group 1 - Frame Truck when used for transportation purposes; Air Compressor and Welding Machines, including those pulled by cars, pick-up trucks and tractors; Ambulances; Articulated Dumps; Batch Gate Lockers; Batch Hopperman; Car and Truck Washers; Carry Alls; Forl Lifts and Hoisters; Helpers; Mechanics Helpers and Greasers; Oil Distributors, two-man operation; Pavement Breakers; Pole Trailer, up to 40 feet; Pothole Repair Trucks; Power Mower Tractors; Quick Change Barrier; Self-Propelled Chip Spreader; Shipping and Receiving Clerks and Checkers; Skipman; Slurry Trucks, two-man operation; Slurry Trucks, Conveyor Operated - 2 or 3 man operation; Teamsters; Unskilled Dumpmen; Warehousemen and Dockmen; Truck Drivers hauling warning lights, barricades, and portable toilets on the job site

Group 2 - Dispatcher; Dump Crets and Adgetators under 7 yards; Dumpsters, Track Trucks, Euclids, Hug Bottom Dump Turnapulls or Turnatrailers when pulling other than self-loading equipment or similar equipment under 16 cubic yards; Mixer Trucks under 7 yards; Ready-Mix Plant Hopper

EXHIBIT B - HIGHWAY

Operator; Winch Trucks, 2 Axles

Group 3 - Dump Crets and Adgetators, 7 yards and over; Dumpsters, Track Trucks, Euclids, Hug Bottom Dump Turnapulls or Turnatrailers when pulling other than self-loading equipment or similar equipment over 16 cubic yards; Explosives and/or Fission Material Trucks; Mixer Trucks 7 yards or over; Mobile Cranes while in transit; Oil Distributors, one-man operation; Pole Trailer, over 40 feet; Pole and Expandable Trailers hauling material over 50 feet long;
Slurry Trucks, one-man operation; Winch Trucks, 3 axles or more; Mechanic - *Truck Welder and *Truck Painter*These classifications shall only apply in areas where and when it has been a past area practice; Asphalt Plant Operators in areas where it has been past practice

Group 4 - Dual-purpose vehicels, such as mounted crane tucks with hoist and accessories; Foreman; Master Mechanic; Self-loading equipment like P.B. and trucks with scoops on the front

---

WELDERS - Receive rate prescribed for craft performing operation to which welding is incidental.

==========

Unlisted classifications needed for work not included within the scope of the classifications listed may be added after award only as provided in the labor standards contract clauses (29CFR 5.5 (a) (1) (ii)).

The body of each wage determination lists the classification and wage rates that have been found to be prevailing for the cited type(s) of construction in the area covered by the wage determination. The classifications are listed in alphabetical order of "identifiers" that indicate whether the particular rate is a union rate (current union negotiated rate for local), a survey rate (weighted average rate) or a union average rate (weighted union average rate).

Union Rate Identifiers

A four letter classification abbreviation identifier enclosed in dotted lines beginning with characters other than "SU" or "UAVG" denotes that the union classification and rate were prevailing for that classification in the survey. Example: PLUM0198-005 07/01/2014. PLUM is an abbreviation identifier of the union which prevailed in the survey for this classification, which in this example would be Plumbers. 0198 indicates the local union number or district council number where applicable, i.e., Plumbers Local 0198. The next number, 005 in the example, is an internal number used in processing the wage determination. 07/01/2014 is the effective date of the

EXHIBIT B - HIGHWAY

most current negotiated rate, which in this example is July 1, 2014.

Union prevailing wage rates are updated to reflect all rate changes in the collective bargaining agreement (CBA) governing this classification and rate.

Survey Rate Identifiers

Classifications listed under the "SU" identifier indicate that no one rate prevailed for this classification in the survey and the published rate is derived by computing a weighted average rate based on all the rates reported in the survey for that classification. As this weighted average rate includes all rates reported in the survey, it may include both union and non-union rates. Example: SULA2012-007 5/13/2014. SU indicates the rates are survey rates based on a weighted average calculation of rates and are not majority rates. LA indicates the State of Louisiana. 2012 is the year of survey on which these classifications and rates are based. The next number, 007 in the example, is an internal number used in producing the wage determination. 5/13/2014 indicates the survey completion date for the classifications and rates under that identifier.

Survey wage rates are not updated and remain in effect until a new survey is conducted.

Union Average Rate Identifiers

Classification(s) listed under the UAVG identifier indicate that no single majority rate prevailed for those classifications; however, 100% of the data reported for the classifications was union data. EXAMPLE: UAVG-OH-0010 08/29/2014. UAVG indicates that the rate is a weighted union average rate. OH indicates the state. The next number, 0010 in the example, is an internal number used in producing the wage determination. 08/29/2014 indicates the survey completion date for the classifications and rates under that identifier.

A UAVG rate will be updated once a year, usually in January of each year, to reflect a weighted average of the current negotiated/CBA rate of the union locals from which the rate is based.

WAGE DETERMINATION APPEALS PROCESS

1.) Has there been an initial decision in the matter? This can be:

* an existing published wage determination
* a survey underlying a wage determination
* a Wage and Hour Division letter setting forth a position on a wage determination matter
* a conformance (additional classification and rate) ruling

On survey related matters, initial contact, including requests for summaries of surveys, should be with the Wage and Hour

EXHIBIT B - HIGHWAY

Regional Office for the area in which the survey was conducted because those Regional Offices have responsibility for the Davis-Bacon survey program. If the response from this initial contact is not satisfactory, then the process described in 2.) and 3.) should be followed.

With regard to any other matter not yet ripe for the formal process described here, initial contact should be with the Branch of Construction Wage Determinations. Write to:

Branch of Construction Wage Determinations
Wage and Hour Division
U.S. Department of Labor
200 Constitution Avenue, N.W.
Washington, DC 20210

2.) If the answer to the question in 1.) is yes, then an interested party (those affected by the action) can request review and reconsideration from the Wage and Hour Administrator (See 29 CFR Part 1.8 and 29 CFR Part 7). Write to:

Wage and Hour Administrator
U.S. Department of Labor
200 Constitution Avenue, N.W.
Washington, DC 20210

The request should be accompanied by a full statement of the interested party's position and by any information (wage payment data, project description, area practice material, etc.) that the requestor considers relevant to the issue.

3.) If the decision of the Administrator is not favorable, an interested party may appeal directly to the Administrative Review Board (formerly the Wage Appeals Board). Write to:

Administrative Review Board
U.S. Department of Labor
200 Constitution Avenue, N.W.
Washington, DC 20210

4.) All decisions by the Administrative Review Board are final.

==========

END OF GENERAL DECISION

EXHIBIT C

EXHIBIT C - LANDSCAPE

General Decision Number: IL160020 01/08/2016 IL20

Superseded General Decision Number: IL20150020

State: Illinois

Construction Types: Building Landscape, Heavy Landscape, Highway Landscape and Residential Landscape

Counties: Boone, Cook, De Kalb, Du Page, Grundy, Henry, Kane, Kankakee, Kendall, Lake, McHenry, McLean, Ogle, Peoria, Rock Island, Tazewell, Will, Winnebago and Woodford Counties in Illinois.

LANDSCAPING WORK ON BUILDING, RESIDENTIAL, HEAVY AND HIGHWAY CONSTRUCTION PROJECTS.

Note: Under Executive Order (EO) 13658, an hourly minimum wage of $10.15 for calendar year 2016 applies to all contracts subject to the Davis-Bacon Act for which the solicitation was issued on or after January 1, 2015. If this contract is covered by the EO, the contractor must pay all workers in any classification listed on this wage determination at least $10.15 (or the applicable wage rate listed on this wage determination, if it is higher) for all hours spent performing on the contract in calendar year 2016. The EO minimum wage rate will be adjusted annually. Additional information on contractor requirements and worker protections under the EO is available at www.dol.gov/whd/govcontracts.

Modification Number	Publication Date
0	01/08/2016

ENGI0150-013 06/01/2015

BUILDING AND HIGHWAY CONSTRUCTION (LANDSCAPE WORK): The landscape work for the Landscape Equipment Operator excludes the preparation of sub-grade prior to application of finish landscape materials and the utilization of any equipment over one cubic yard.

BOONE, COOK, DUPAGE, GRUNDY, KANE, KENDALL, LAKE, MCHENRY, AND WILL COUNTIES

	Rates	Fringes
Operators:	$ 29.40	3.00+A+B+C

Includes Angle Dozer, Small; Bobcat and other similar type machines, 1 cu yd or less; Chipping Machine; Combination Backhoe and Front End Loader 1 cu yd or less; Fork Lift Truck; Hi-Reach and High-Ranger;Hydraulic Boom with Clam;Log Skidder; Sttraw Blower and Seeder; Stump Machine;Tractors, Crawlers, Rubber Tire Tractors, Highlift Shovels or Front End Loaders 1 cu yd or less; Tree Spades, all; Utility Tractor and attachments, and Rubber Tire Front End loader or similar

EXHIBIT C - LANDSCAPE

machine of 1 to 1.5 cu yd solely used for placement of large decorative boulders, trees with balled soil, and other decorative landscape material too large to be accommodated in a 1 cu yd bucket. All other equipment utilized for performing landscape work, tree trimming or removal of stees, and to install plants; transport trees; excavate plant pits; place soil and other landscape materials; and apply finish landscape material on subgrade prepared by others

FOOTNOTE:

A. Health and Welfare contribution is $1,143.00 per month.

B. Paid Holidays: New Year's Day; Memorial Day; Fourth of July; Labor Day; Thanksgiving Day; and Christmas Day provided that all such employees shall have in fact worked their regularly scheduled work day immediately preceding and the regularly scheduled work day immediately succeeding the occurrence of such holiday.

C. Paid Vacation: All employees who have been in the employ of the Employer for a full season of work shall be entitled to one (1) week of vacation with pay. Pay shall be 40 times the employee's regular straight time hourly rate. Effective as of January 1, 2010, employees who have worked for the employer for not less than eleven hundred (1100) straight time and overtime hours since their most recent anniversary date of hire as of vacation time will be deemed to have worked one full season. All employees who have been in the employ of their Employer for three (3) or more consecutive full seasons of work shall at the conclusion of their current season be entitled to two (2) weeks of vacation with pay. Pay shall be 80 times the employee's regular straight time hourly rate. All employees who have been in the employ of their employer for nine (9) or more consecutive full seasons of work shall at the conclusion of their current season be entitled to three (3) weeks of vacation with pay. Pay shall be 120 times the employee's regular straight time hourly rate.

ENGI0150-023 06/01/2015

HIGHWAY CONSTRUCTION (LANDSCAPE WORK): The landscape work for the Landscape Equipment Operator excludes the preparation of sub-grade prior to application of finish landscape materials and the utilization of any equipment over one cubic yard.

HENRY, MCLEAN, OGLE, PEORIA, ROCK ISLAND, TAZEWELL, WINNEBAGO, and WOODFORD COUNTIES

	Rates	Fringes
Operators:.....	$ 29.40	3.00+A+B+C

Includes the following: Angle Dozer, Small; Bobcat and other similar type machines, 1 cu yd or less; Chipping Machine; Combination Backhoe and Front End Loader 1 cu yd or less; Fork Lift Truck; Hi-Reach and High-Ranger;Hydraulic Boom with

EXHIBIT C - LANDSCAPE

Clam;Log Skidder; Sttraw Blower and Seeder; Stump Machine;Tractors, Crawlers, Rubber Tire Tractors, Highlift Shovels or Front End Loaders 1 cu yd or less; Tree Spades, all; Utility Tractor and attachments, and Rubber Tire Front End loader or similar machine of 1 to 1.5 cu yd solely used for placement of large decorative boulders, trees with balled soil, and other decorative landscape material too large to be accommodated in a 1 cu yd bucket. All other equipment utilized for performing landscape work, tree trimming or removal of stees, and to install plants; transport trees; excavate plant pits; place soil and other landscape materials; and apply finish landscape material on subgrade prepared by others

FOOTNOTE:

A. Health and Welfare contribution is $1,143.00 per month.

B. Paid Holidays: New Year's Day; Memorial Day; Fourth of July; Labor Day; Thanksgiving Day; and Christmas Day provided that all such employees shall have in fact worked their regularly scheduled work day immediately preceding and the regularly scheduled work day immediately succeeding the occurrence of such holiday.

C. Paid Vacation: All employees who have been in the employ of the Employer for a full season of work shall be entitled to one (1) week of vacation with pay. Pay shall be 40 times the employee's regular straight time hourly rate. Effective as of January 1, 2010, employees who have worked for the employer for not less than eleven hundred (1100) straight time and overtime hours since their most recent anniversary date of hire as of vacation time will be deemed to have worked one full season. All employees who have been in the employ of their Employer for three (3) or more consecutive full seasons of work shall at the conclusion of their current season be entitled to two (2) weeks of vacation with pay. Pay shall be 80 times the employee's regular straight time hourly rate. All employees who have been in the employ of their employer for nine (9) or more consecutive full seasons of work shall at the conclusion of their current season be entitled to three (3) weeks of vacation with pay. Pay shall be 120 times the employee's regular straight time hourly rate.

LABO0032-004 05/01/2009

HIGHWAY CONSTRUCTION

WINNEBAGO COUNTY

	Rates	Fringes
Landscape Laborer.....	$ 27.66	18.50

LABO0362-003 05/01/2013

HIGHWAY CONSTRUCTION

MCLEAN COUNTY

EXHIBIT C - LANDSCAPE

```
                                  Rates          Fringes

Landscape Laborer................$ 31.08           17.79
----------------------------------------------------------------
 LABO0751-004 05/01/2012

HIGHWAY CONSTRUCTION

KANKAKEE COUNTY

                                  Rates          Fringes

Landscape Laborer................$ 33.16           20.66
----------------------------------------------------------------
 LABO0852-004 05/01/2006

HIGHWAY CONSTRUCTION

ROCK ISLAND AND HENRY COUNTIES

                                  Rates          Fringes

Landscape Laborer................$ 21.94           12.79
----------------------------------------------------------------
 LABO0996-004 05/01/2014

HIGHWAY CONSTRUCTION

PEORIA, TAZEWELL, AND WOODFORD COUNTIES

                                  Rates          Fringes

Landscape Laborer................$ 31.61           18.76
----------------------------------------------------------------
 TEAM0065-005 05/01/2013

MCLEAN COUNTY (South of a straight line from where Route 24
intersects the Woodford County line in a Southeast direction to
the South Southwest corner of Livingston County), OGLE (South
of Route 72/West of Route 251), PEORIA, TAZEWELL, and WOODFORD
(All except Northeast corner East of Route 51/251 & South of
Route 24) COUNTIES


                                  Rates          Fringes

TRUCK DRIVER
     Group 1.....................$ 32.04          10.70+a
     Group 2.....................$ 32.50          10.70+a
     Group 3.....................$ 32.72          10.70+a
     Group 4.....................$ 33.02          10.70+a
     Group 5.....................$ 33.88          10.70+a

FOOTNOTE:  a. $201.2 per week

CLASSIFICATIONS:

  GROUP 1:  Drivers on 2 axles hauling less than 9 tons; air
  compressor & welding machines and brooms, including those
  pulled by separate units; Truck Driver Helper, warehouse
```

EXHIBIT C - LANDSCAPE

employees; Mechanic Helpers; greasers and tiremen; pick-up trucks when hauling material, tools, or workers to and from and on the job site; and forklifts up to 6,000 lb capacity.

GROUP 2: 2 or 3 axles hualing more than 9 tons but hauling less than 16 tons; A-frame winch trucks; hydrolift trucks; Vactor Trucks or similar equipment when used for transportation purposes; Forklift over 6,000 lb.capacity; winch trucks; and four axle combiation units.

GROUP 3: 2, 3 or 4 Axles hauling 16 tons or more; 5-Axles or more combination units; drivers on water pulls; articulated dump trucks; mechanics and working forepersons.

GROUP 4: Low Boy and Oil Distributors.

GROUP 5: Drivers who require special protective clothing while employed on hazardous waste work.

---

* TEAM0179-004 06/01/2015

GRUNDY, KENDALL, MCLEAN (North of a straight line starting at the intersection of McLean-Woodford Counties line & Route 24 in a Southeastern direction to the South Southwest corner of Livingston County), WILL, and WOODFORD (Northeast corner east of Route 51/251 & North of Route 24) COUNTIES

	Rates	Fringes
TRUCK DRIVER		
2-3 AXLES	$ 36.45	0.25+a
4 AXLES	$ 36.60	0.25+a
5 AXLES	$ 36.80	0.25+a
6 AXLES	$ 37.00	0.25+a
All Lowboy Trucks	$ 37.20	0.25+a

FOOTNOTE: a. $647.20 per week.

FOOTNOTE: An additional $.20 per axle shall be paid for all vehicles with more than six (6) axles.

CLASSIFICATIONS:

Group 1 - Frame Truck when used for transportation purposes; Air Compressor and Welding Machines, including those pulled by cars, pick-up trucks and tractors; Ambulances; Articulated Dumps; Batch Gate Lockers; Batch Hopperman; Car and Truck Washers; Carry Alls; Forl Lifts and Hoisters; Helpers; Mechanics Helpers and Greasers; Oil Distributors, two-man operation; Pavement Breakers; Pole Trailer, up to 40 feet; Pothole Repair Trucks; Power Mower Tractors; Quick Change Barrier; Self-Propelled Chip Spreader; Shipping and Receiving Clerks and Checkers; Skipman; Slurry Trucks, two-man operation; Slurry Trucks, Conveyor Operated - 2 or 3 man operation; Teamsters; Unskilled Dumpmen; Warehousemen and Dockmen; Truck Drivers hauling warning lights, barricades, and portable toilets on the job site

Group 2 - Dispatcher; Dump Crets and Adgetators under 7

EXHIBIT C - LANDSCAPE

yards; Dumpsters, Track Trucks, Euclids, Hug Bottom Dump Turnapulls or Turnatrailers when pulling other than self-loading equipment or similar equipment under 16 cubic yards; Mixer Trucks under 7 yards; Ready-Mix Plant Hopper Operator; Winch Trucks, 2 Axles

Group 3 - Dump Crets and Adgetators, 7 yards and over; Dumpsters, Track Trucks, Euclids, Hug Bottom Dump Turnapulls or Turnatrailers when pulling other than self-loading equipment or similar equipment over 16 cubic yards; Explosives and/or Fission Material Trucks; Mixer Trucks 7 yards or over; Mobile Cranes while in transit; Oil Distributors, one-man operation; Pole Trailer, over 40 feet; Pole and Expandable Trailers hauling material over 50 feet long;
Slurry Trucks, one-man operation; Winch Trucks, 3 axles or more; Mechanic - *Truck Welder and *Truck Painter*These classifications shall only apply in areas where and when it has been a past area practice; Asphalt Plant Operators in areas where it has been past practice

Group 4 - Dual-purpose vehicels, such as mounted crane tucks with hoist and accessories; Foreman; Master Mechanic; Self-loading equipment like P.B. and trucks with scoops on the front

---

* TEAM0179-008 06/01/2015

KANKAKEE COUNTY

	Rates	Fringes
TRUCK DRIVER		
2 or 3 axles	$ 36.45	0.25+a
4 axles	$ 36.60	0.25+a
5 axles	$ 36.80	0.25+a
6 axles	$ 37.00	0.25+a

FOOTNOTE: a. $647.20 per week.

FOOTNOTE: An additional $.20 per axle shall be paid for all vehicles with more than six (6) axles.

CLASSIFICATIONS:

Group 1 - Frame Truck when used for transportation purposes; Air Compressor and Welding Machines, including those pulled by cars, pick-up trucks and tractors; Ambulances; Articulated Dumps; Batch Gate Lockers; Batch Hopperman; Car and Truck Washers; Carry Alls; Forl Lifts and Hoisters; Helpers; Mechanics Helpers and Greasers; Oil Distributors, two-man operation; Pavement Breakers; Pole Trailer, up to 40 feet; Pothole Repair Trucks; Power Mower Tractors; Quick Change Barrier; Self-Propelled Chip Spreader; Shipping and Receiving Clerks and Checkers; Skipman; Slurry Trucks, two-man operation; Slurry Trucks, Conveyor Operated - 2 or 3 man operation; Teamsters; Unskilled Dumpmen; Warehousemen and Dockmen; Truck Drivers hauling warning lights, barricades, and portable toilets on the job site

EXHIBIT C - LANDSCAPE

Group 2 - Dispatcher; Dump Crets and Adgetators under 7 yards; Dumpsters, Track Trucks, Euclids, Hug Bottom Dump Turnapulls or Turnatrailers when pulling other than self-loading equipment or similar equipment under 16 cubic yards; Mixer Trucks under 7 yards; Ready-Mix Plant Hopper Operator; Winch Trucks, 2 Axles

Group 3 - Dump Crets and Adgetators, 7 yards and over; Dumpsters, Track Trucks, Euclids, Hug Bottom Dump Turnapulls or Turnatrailers when pulling other than self-loading equipment or similar equipment over 16 cubic yards; Explosives and/or Fission Material Trucks; Mixer Trucks 7 yards or over; Mobile Cranes while in transit; Oil Distributors, one-man operation; Pole Trailer, over 40 feet; Pole and Expandable Trailers hauling material over 50 feet long;
Slurry Trucks, one-man operation; Winch Trucks, 3 axles or more; Mechanic - *Truck Welder and *Truck Painter*These classifications shall only apply in areas where and when it has been a past area practice; Asphalt Plant Operators in areas where it has been past practice

Group 4 - Dual-purpose vehicels, such as mounted crane tucks with hoist and accessories; Foreman; Master Mechanic; Self-loading equipment like P.B. and trucks with scoops on the front

---

* TEAM0301-001 06/01/2015

LAKE AND MCHENRY COUNTIES

	Rates	Fringes
TRUCK DRIVER		
2-3 AXLES	$ 36.21	9.32+a
4 AXLES	$ 36.36	9.32+a
5 AXLES	$ 36.56	9.32+a
6 AXLES	$ 36.76	9.32+a

FOOTNOTE: a. $282.00 per week pension

An additional $.20 per axle shall be paid for all vehicles with more than six (6) axles.

Paid Holidays: New Year's Day, Memorial Day, Independence Day, Labor Day, Thanksgiving Day, and Christmas Day.

900 straight time hours or more in 1 calendar year for the same employer shall receive 1 week paid vacation; 3 years - 2 weeks paid vacation; 10 years - 3 weeks paid vacation; 20 years - 4 weeks paid vacation.

CLASSIFICATIONS:

Group 1 - Frame Truck when used for transportation purposes; Air Compressor and Welding Machines, including those pulled by cars, pick-up trucks and tractors; Ambulances; Articulated Dumps; Batch Gate Lockers; Batch Hopperman; Car and Truck Washers; Carry Alls; Forl Lifts and Hoisters; Helpers; Mechanics Helpers and Greasers; Oil Distributors,

EXHIBIT C - LANDSCAPE

two-man operation; Pavement Breakers; Pole Trailer, up to 40 feet; Pothole Repair Trucks; Power Mower Tractors; Quick Change Barrier; Self-Propelled Chip Spreader; Shipping and Receiving Clerks and Checkers; Skipman; Slurry Trucks, two-man operation; Slurry Trucks, Conveyor Operated - 2 or 3 man operation; Teamsters; Unskilled Dumpmen; Warehousemen and Dockmen; Truck Drivers hauling warning lights, barricades, and portable toilets on the job site

Group 2 - Dispatcher; Dump Crets and Adgetators under 7 yards; Dumpsters, Track Trucks, Euclids, Hug Bottom Dump Turnapulls or Turnatrailers when pulling other than self-loading equipment or similar equipment under 16 cubic yards; Mixer Trucks under 7 yards; Ready-Mix Plant Hopper Operator; Winch Trucks, 2 Axles

Group 3 - Dump Crets and Adgetators, 7 yards and over; Dumpsters, Track Trucks, Euclids, Hug Bottom Dump Turnapulls or Turnatrailers when pulling other than self-loading equipment or similar equipment over 16 cubic yards; Explosives and/or Fission Material Trucks; Mixer Trucks 7 yards or over; Mobile Cranes while in transit; Oil Distributors, one-man operation; Pole Trailer, over 40 feet; Pole and Expandable Trailers hauling material over 50 feet long;
Slurry Trucks, one-man operation; Winch Trucks, 3 axles or more; Mechanic - *Truck Welder and *Truck Painter*These classifications shall only apply in areas where and when it has been a past area practice; Asphalt Plant Operators in areas where it has been past practice

Group 4 - Dual-purpose vehicels, such as mounted crane tucks with hoist and accessories; Foreman; Master Mechanic; Self-loading equipment like P.B. and trucks with scoops on the front

---

* TEAM0325-004 06/01/2015

BOONE and WINNEBAGO COUNTIES

	Rates	Fringes
TRUCK DRIVER		
2 - 3 Axles	$ 35.87	18.00
4 Axles	$ 36.02	18.00
5 Axles	$ 36.22	18.00
6 Axles	$ 36.33	18.00

FOOTNOTE: An additional $.20 per axle shall be paid for all vehicles with more than six (6) axles.

CLASSIFICATIONS:

Group 1 - Frame Truck when used for transportation purposes; Air Compressor and Welding Machines, including those pulled by cars, pick-up trucks and tractors; Ambulances; Batch Gate Lockers; Batch Hopperman; Car and Truck Washers; Forl Lifts and Hoisters; Helpers;
Mechanics Helpers and Greasers; Oil Distributors, two-man operation; Pavement Breakers

EXHIBIT C - LANDSCAPE

Pole Trailer, up to 40 feet; Power Mower Tractors; Skipman; Slurry Trucks, two-man operation; Teamsters; Truck Drivers hauling warning lights, barricades, and portable toilets on the job site

Group 2 - Dump Crets and Adgetators under 7 yards; Dumpsters, Track Trucks, Euclids, Hug Bottom Dump Turnapulls or Turnatrailers when pulling other than self-loading equipment or similar equipment under 16 cubic yards; Mixer Trucks under 7 yards; Ready-Mix Plant Hopper Operator; Winch Trucks, 2 Axles

Group 3 - Dump Crets and Adgetators, 7 yards and over; Dumpsters, Track Trucks, Euclids, Hug Bottom Dump Turnapulls or Turnatrailers when pulling other than self-loading equipment or similar equipment over 16 cubic yards; Explosives and/or Fission Material Trucks; Mixer Trucks 7 yards or over; Mobile Cranes while in transit; Oil Distributors, one-man operation
Pole Trailer, over 40 feet; Pole and Expandable Trailers hauling material over 50 feet long, additional $0.50 per hour; Slurry Trucks, one-man operation; Winch Trucks, 3 axles or more
*Mechanic*Truck Welder and Truck Painter; *Winter Rate: Between Dec. 15 and Feb. 28 the mechanic and welder rate shall be $2.00 less than the scheduled scale. Truck Painter and Truck Welder classifications shall only apply in areas where and when it has been a past area practice;
Dual-purpose vehicels, such as mounted crane tucks with hoist and accessories

Group 4 - Foreman; Master Mechanic; Self-loading equipment like P.B. and trucks with scoops on the front

---

* TEAM0330-004 06/01/2015

DEKALB and OGLE (North of Route 72/East of Route 251, Adeline, Byron, Creston, Dement, Forreston North of Route 72, Leaf River North of Route 72, Lynnville, Monroe, Rochelle, & Scott) COUNTIES

	Rates	Fringes
TRUCK DRIVER		
2-3 AXLES	$ 35.25	.25+a
4 AXLES	$ 35.40	.25+a
5 AXLES	$ 35.60	.25+a
6 AXLES	$ 35.80	.25+a

FOOTNOTE: a. $695.70 per week

An additional $.20 per axle shall be paid for all vehicles with more than six (6) axles.

Paid Holidays: New Year's Day, Memorial Day, Independence Day, Labor Day, Thanksgiving Day, and Christmas Day.

900 straight time hours or more in 1 calendar year for the same employer shall receive 1 week paid vacation; 3 years -

EXHIBIT C - LANDSCAPE

2 weeks paid vacation; 10 years - 3 weeks paid vacation; 20 years - 4 weeks paid vacation.

CLASSIFICATIONS:

Group 1 - Frame Truck when used for transportation purposes; Air Compressor and Welding Machines, including those pulled by cars, pick-up trucks and tractors; Ambulances; Articulated Dumps; Batch Gate Lockers; Batch Hopperman; Car and Truck Washers; Carry Alls; Forl Lifts and Hoisters; Helpers; Mechanics Helpers and Greasers; Oil Distributors, two-man operation; Pavement Breakers; Pole Trailer, up to 40 feet; Pothole Repair Trucks; Power Mower Tractors; Quick Change Barrier; Self-Propelled Chip Spreader; Shipping and Receiving Clerks and Checkers; Skipman; Slurry Trucks, two-man operation; Slurry Trucks, Conveyor Operated - 2 or 3 man operation; Teamsters; Unskilled Dumpmen; Warehousemen and Dockmen; Truck Drivers hauling warning lights, barricades, and portable toilets on the job site

Group 2 - Dispatcher; Dump Crets and Adgetators under 7 yards; Dumpsters, Track Trucks, Euclids, Hug Bottom Dump Turnapulls or Turnatrailers when pulling other than self-loading equipment or similar equipment under 16 cubic yards; Mixer Trucks under 7 yards; Ready-Mix Plant Hopper Operator; Winch Trucks, 2 Axles

Group 3 - Dump Crets and Adgetators, 7 yards and over; Dumpsters, Track Trucks, Euclids, Hug Bottom Dump Turnapulls or Turnatrailers when pulling other than self-loading equipment or similar equipment over 16 cubic yards; Explosives and/or Fission Material Trucks; Mixer Trucks 7 yards or over; Mobile Cranes while in transit; Oil Distributors, one-man operation; Pole Trailer, over 40 feet; Pole and Expandable Trailers hauling material over 50 feet long;
Slurry Trucks, one-man operation; Winch Trucks, 3 axles or more; Mechanic - *Truck Welder and *Truck Painter*These classifications shall only apply in areas where and when it has been a past area practice; Asphalt Plant Operators in areas where it has been past practice

Group 4 - Dual-purpose vehicels, such as mounted crane tucks with hoist and accessories; Foreman; Master Mechanic; Self-loading equipment like P.B. and trucks with scoops on the front

---

* TEAM0371-004 05/01/2015

HENRY and ROCK ISLAND COUNTIES

	Rates	Fringes
TRUCK DRIVER		
Group 1	$ 34.22	17.29
Group 2	$ 34.69	17.29
Group 3	$ 34.95	17.29
Group 4	$ 35.24	17.29
Group 5	$ 36.17	17.29

EXHIBIT C - LANDSCAPE

CLASSIFICATIONS:

GROUP 1: Drivers on 2 axles hauling less than 9 tons; air compressor & welding machines and brooms, including those pulled by separate units; Truck Driver Helper, warehouse employees; Mechanic Helpers; greasers and tiremen; pick-up trucks when hauling material, tools, or workers to and from and on the job site; and forklifts up to 6,000 lb capacity.

GROUP 2: 2 or 3 axles hualing more than 9 tons but hauling less than 16 tons; A-frame winch trucks; hydrolift trucks; Vactor Trucks or similar equipment when used for transportation purposes; Forklift over 6,000 lb.capacity; winch trucks; and four axle combiation units.

GROUP 3: 2, 3 or 4 Axles hauling 16 tons or more; 5-Axles or more combination units; drivers on water pulls; articulated dump trucks; mechanics and working forepersons.

GROUP 4: Low Boy and Oil Distributors.

GROUP 5: Drivers who require special protective clothing while employed on hazardous waste work.

---

* TEAM0673-003 06/01/2015

DU PAGE and KANE COUNTIES

	Rates	Fringes
TRUCK DRIVER		
2-3 AXLES	$ 35.57	.25+a
4 AXLES	$ 35.72	.25+a
5 AXLES	$ 35.92	.25+a
6 AXLES	$ 36.12	.25+a

FOOTNOTE: a. $681.70 per week.

An additional $.20 per axle shall be paid for all vehicles with more than six (6) axles.

Paid Holidays: New Year's Day, Memorial Day, Independence Day, Labor Day, Thanksgiving Day, and Christmas Day.

900 straight time hours or more in 1 calendar year for the same employer shall receive 1 week paid vacation; 3 years - 2 weeks paid vacation; 10 years - 3 weeks paid vacation; 20 years - 4 weeks paid vacation.

CLASSIFICATIONS:

Group 1 - Frame Truck when used for transportation purposes; Air Compressor and Welding Machines, including those pulled by cars, pick-up trucks and tractors; Ambulances; Articulated Dumps; Batch Gate Lockers; Batch Hopperman; Car and Truck Washers; Carry Alls; Forl Lifts and Hoisters; Helpers; Mechanics Helpers and Greasers; Oil Distributors, two-man operation; Pavement Breakers; Pole Trailer, up to 40 feet; Pothole Repair Trucks; Power Mower Tractors; Quick Change Barrier; Self-Propelled Chip Spreader; Shipping and

EXHIBIT C - LANDSCAPE

Receiving Clerks and Checkers; Skipman; Slurry Trucks, two-man operation; Slurry Trucks, Conveyor Operated - 2 or 3 man operation; Teamsters; Unskilled Dumpmen; Warehousemen and Dockmen; Truck Drivers hauling warning lights, barricades, and portable toilets on the job site

Group 2 - Dispatcher; Dump Crets and Adgetators under 7 yards; Dumpsters, Track Trucks, Euclids, Hug Bottom Dump Turnapulls or Turnatrailers when pulling other than self-loading equipment or similar equipment under 16 cubic yards; Mixer Trucks under 7 yards; Ready-Mix Plant Hopper Operator; Winch Trucks, 2 Axles

Group 3 - Dump Crets and Adgetators, 7 yards and over; Dumpsters, Track Trucks, Euclids, Hug Bottom Dump Turnapulls or Turnatrailers when pulling other than self-loading equipment or similar equipment over 16 cubic yards; Explosives and/or Fission Material Trucks; Mixer Trucks 7 yards or over; Mobile Cranes while in transit; Oil Distributors, one-man operation; Pole Trailer, over 40 feet; Pole and Expandable Trailers hauling material over 50 feet long;
Slurry Trucks, one-man operation; Winch Trucks, 3 axles or more; Mechanic - *Truck Welder and *Truck Painter*These classifications shall only apply in areas where and when it has been a past area practice; Asphalt Plant Operators in areas where it has been past practice

Group 4 - Dual-purpose vehicels, such as mounted crane tucks with hoist and accessories; Foreman; Master Mechanic; Self-loading equipment like P.B. and trucks with scoops on the front

---

TEAM0731-001 06/01/2015

COOK COUNTY - HEAVY AND HIGHWAY

	Rates	Fringes
TRUCK DRIVER		
2 or 3 Axles	$ 35.03	18.85
4 Axles	$ 35.28	18.85
5 Axles	$ 35.48	18.85
6 Axles	$ 35.68	18.85

FOOTNOTES:

A. Paid Holidays: New Year's Day, Memorial Day, Independence Day, Labor Day, Thanksgiving Day, and Christmas Day.

B. 900 straight time hours or more in 1 calendar year for the same employer shall receive 1 week paid vacation; 3 years - 2 weeks paid vacation; 10 years - 3 weeks paid vacation; 20 years - 4 weeks paid vacation.

C. An additional $.20 per axle shall be paid for all vehicles with more than six (6) axles.

TEAM0786-001 06/01/2015

EXHIBIT C - LANDSCAPE

COOK COUNTY - BUILDING AND RESIDENTIAL

	Rates	Fringes
TRUCK DRIVER		
2 & 3 Axles	$ 37.395	.25+a
4 Axles	$ 37.645	.25+a
5 Axles	$ 37.855	.25+a
6 Axles	$ 38.065	.25+a

FOOTNOTES:

a. $659.00 per week.

An additional $.20 per axle shall be paid for all vehicles with more than six (6) axles.

Paid Holidays: New Year's Day, Memorial Day, Independence Day, Labor Day, Thanksgiving Day, and Christmas Day.

900 straight time hours or more in 1 calendar year for the same employer shall receive 1 week paid vacation; 3 years - 2 weeks paid vacation; 10 years - 3 weeks paid vacation; 20 years - 4 weeks paid vacation.

SUIL1993-001 01/19/1993

BUILDING CONSTRUCTION (LANDSCAPE WORK):

	Rates	Fringes
LABORER		
BOONE, GRUNDY, KANE, KENDALL, LAKE, MCHENRY, & WILL COUNTIES		
LANDSCAPE LABORERS	$ 7.25	
COOK COUNTY		
LANDSCAPE LABORERS	$ 7.25	
LANDSCAPE PLANTSMAN	$ 9.80	1.82
DE KALB COUNTY		
LANDSCAPE LABORERS	$ 7.25	
LANDSCAPE OPERATORS	$ 7.25	
LANDSCAPE PLANTSMAN	$ 9.66	.26
DU PAGE COUNTY		
LANDSCAPE LABORERS	$ 7.25	
LANDSCAPE PLANTSMAN	$ 9.04	1.16
GRUNDY, LAKE & WILL COUNTIES		
LANDSCAPE DRIVER 2 & 3 Axles	$ 11.86	2.81
LANDSCAPE PLANTSMAN	$ 12.00	3.32

SUIL1993-002 01/19/1993

HEAVY CONSTRUCTION (LANDSCAPE WORK)

	Rates	Fringes

EXHIBIT C - LANDSCAPE

```
LABORER
     BOONE, GRUNDY, KANE,
     KENDALL, LAKE, MCHENRY &
     WILL COUNTIES:
      LANDSCAPE DRIVER, 2 & 3
      AXLES.....................$ 11.94            2.42
      LANDSCAPE LABORERS........$  7.25
      LANDSCAPE OPERATORS.......$ 13.11            3.01
      LANDSCAPE PLANTSMAN.......$  9.73            2.05
     COOK COUNTY:
      LANDSCAPE DRIVER, 2 & 3
      AXLES.....................$  9.93            1.89
      LANDSCAPE LABORERS........$  7.25
      LANDSCAPE OPERATORS.......$ 10.98            2.12
      LANDSCAPE PLANTSMAN.......$ 10.08            2.06
     DE KALB COUNTY:
      LANDSCAPE LABORERS........$  7.25
      LANDSCAPE OPERATORS.......$  7.25
      LANDSCAPE PLANTSMAN.......$  9.66             .26
     DU PAGE COUNTY:
      LANDSCAPE DRIVER, 2 & 3
      AXLES.....................$  8.32            1.02
      LANDSCAPE LABORERS........$  7.25
      LANDSCAPE OPERATORS.......$ 10.75
      LANDSCAPE PLANTSMAN.......$ 10.65
----------------------------------------------------------------
  SUIL1993-003 01/19/1993

HIGHWAY CONSTRUCTION (LANDSCAPE WORK):

                                  Rates          Fringes

LABORER
     DE KALB COUNTY
      LANDSCAPE LABORERS........$  7.25
      LANDSCAPE OPERATORS.......$  7.25
      LANDSCAPE PLANTSMAN.......$  9.66             .26
     KANKAKEE COUNTY:
      LANDSCAPE DRIVER..........$  8.75             .17
      LANDSCAPE OPERATOR........$ 16.57            3.56
     PEORIA, TAZEWELL, &
     WOODFORD COUNTIES:
      TRUCK DRIVERS 2 & 3 AXLES..$ 17.58           5.88
----------------------------------------------------------------

WELDERS - Receive rate prescribed for craft performing
operation to which welding is incidental.

================================================================


Unlisted classifications needed for work not included within
the scope of the classifications listed may be added after
award only as provided in the labor standards contract clauses
(29CFR 5.5 (a) (1) (ii)).


----------------------------------------------------------------


The body of each wage determination lists the classification
```

EXHIBIT C - LANDSCAPE

and wage rates that have been found to be prevailing for the cited type(s) of construction in the area covered by the wage determination. The classifications are listed in alphabetical order of "identifiers" that indicate whether the particular rate is a union rate (current union negotiated rate for local), a survey rate (weighted average rate) or a union average rate (weighted union average rate).

Union Rate Identifiers

A four letter classification abbreviation identifier enclosed in dotted lines beginning with characters other than "SU" or "UAVG" denotes that the union classification and rate were prevailing for that classification in the survey. Example: PLUM0198-005 07/01/2014. PLUM is an abbreviation identifier of the union which prevailed in the survey for this classification, which in this example would be Plumbers. 0198 indicates the local union number or district council number where applicable, i.e., Plumbers Local 0198. The next number, 005 in the example, is an internal number used in processing the wage determination. 07/01/2014 is the effective date of the most current negotiated rate, which in this example is July 1, 2014.

Union prevailing wage rates are updated to reflect all rate changes in the collective bargaining agreement (CBA) governing this classification and rate.

Survey Rate Identifiers

Classifications listed under the "SU" identifier indicate that no one rate prevailed for this classification in the survey and the published rate is derived by computing a weighted average rate based on all the rates reported in the survey for that classification. As this weighted average rate includes all rates reported in the survey, it may include both union and non-union rates. Example: SULA2012-007 5/13/2014. SU indicates the rates are survey rates based on a weighted average calculation of rates and are not majority rates. LA indicates the State of Louisiana. 2012 is the year of survey on which these classifications and rates are based. The next number, 007 in the example, is an internal number used in producing the wage determination. 5/13/2014 indicates the survey completion date for the classifications and rates under that identifier.

Survey wage rates are not updated and remain in effect until a new survey is conducted.

Union Average Rate Identifiers

Classification(s) listed under the UAVG identifier indicate that no single majority rate prevailed for those classifications; however, 100% of the data reported for the classifications was union data. EXAMPLE: UAVG-OH-0010 08/29/2014. UAVG indicates that the rate is a weighted union average rate. OH indicates the state. The next number, 0010 in the example, is an internal number used in producing the wage determination. 08/29/2014 indicates the survey completion date for the classifications and rates under that identifier.

A UAVG rate will be updated once a year, usually in January of

each year, to reflect a weighted average of the current negotiated/CBA rate of the union locals from which the rate is based.

EXHIBIT C - LANDSCAPE

WAGE DETERMINATION APPEALS PROCESS

1.) Has there been an initial decision in the matter? This can be:

* an existing published wage determination
* a survey underlying a wage determination
* a Wage and Hour Division letter setting forth a position on a wage determination matter
* a conformance (additional classification and rate) ruling

On survey related matters, initial contact, including requests for summaries of surveys, should be with the Wage and Hour Regional Office for the area in which the survey was conducted because those Regional Offices have responsibility for the Davis-Bacon survey program. If the response from this initial contact is not satisfactory, then the process described in 2.) and 3.) should be followed.

With regard to any other matter not yet ripe for the formal process described here, initial contact should be with the Branch of Construction Wage Determinations. Write to:

Branch of Construction Wage Determinations
Wage and Hour Division
U.S. Department of Labor
200 Constitution Avenue, N.W.
Washington, DC 20210

2.) If the answer to the question in 1.) is yes, then an interested party (those affected by the action) can request review and reconsideration from the Wage and Hour Administrator (See 29 CFR Part 1.8 and 29 CFR Part 7). Write to:

Wage and Hour Administrator
U.S. Department of Labor
200 Constitution Avenue, N.W.
Washington, DC 20210

The request should be accompanied by a full statement of the interested party's position and by any information (wage payment data, project description, area practice material, etc.) that the requestor considers relevant to the issue.

3.) If the decision of the Administrator is not favorable, an interested party may appeal directly to the Administrative Review Board (formerly the Wage Appeals Board). Write to:

Administrative Review Board
U.S. Department of Labor
200 Constitution Avenue, N.W.
Washington, DC 20210

4.) All decisions by the Administrative Review Board are final.

EXHIBIT C - LANDSCAPE

==========

END OF GENERAL DECISION

PART II

General Conditions Table of Contents……GCTOC 1 - 2

General Conditions of the Contract……GC 1 - 15

GENERAL CONDITIONS OF THE CONTRACT

TABLE OF CONTENTS

Paragraph Number / Description **Page Number**

1. Definitions……GC – 1
2. Hold Harmless Agreement (Contractual Liability)……GC – 1
3. Contractor's Insurance……..GC – 2
4. Proof of Carrying Insurance……..GC – 3
5. Definition of Notice……GC – 3
6. Intent of Contract Documents……...GC – 4
7. Plans and Specifications……...GC – 4
8. Permits, Surveys and Compliance with Laws……GC – 4
9. Other Contracts……..GC – 5
10. Schedule of Unit Prices……GC – 5
11. Sub-Contractors……GC – 5
12. Assignment of Contract……GC – 5
13. Staking Work……...GC – 6
14. Notice to Start Work……...GC – 6
15. Superintendent……GC – 6
16. Materials and Workmanship……GC – 7
17. Use of Job Site……...GC – 7
18. Use of Private Land…… GC – 7
19. Labor……GC – 7
20. Wage Rates……GC – 8
21. Accident Prevention…….. GC - 8
22. Sanitary Convenience……GC – 8
23. Engineer……...GC – 8
24. Decisions of the Engineer……GC – 9
25. Direction……GC – 9
26. Inspection……GC – 9
27. Protection of Work……...GC – 10

28. Obstruction and Resuming Travel…….GC – 10
29. Cost of Services……...GC – 10
30. Payments……...GC – 11
31. Owner's Right to Withhold Certain Amounts and
Make Application Thereof…….GC – 11
32. Deductions of Uncorrected Work……..GC – 12
33. Charges – Payments……...GC – 12
34. Cutting and Patching……...GC – 12
35. Guarantee and Maintenance of Work……..GC – 12
36. Termination for Breach……GC – 13
37. Correction of Work After Final Payment……..GC – 13
38. Owner's Right to do Work……..GC – 13
39. Final Tests…… GC – 13
40. Cleaning Up and Final Inspection……GC – 14
41. Measurement of Work……GC – 14
42. Final Acceptance……GC – 14
43. Failure to Complete Work on Time (Liquidated Damages)……..GC – 15
44. Freedom of Information (FOIA) Requirements……..GC – 15

GENERAL CONDITIONS OF THE CONTRACT

1. **DEFINITIONS:**
The following terms as used in these contract documents are respectively defined as follows:

a. ***"Project":*** The entire improvement proposed by the Owner to be constructed in whole or in part pursuant to the within contract.

b. **"Owner":** The contracting party initiating the project as set forth in the contract acting through its authorized representative in accordance with specific duties delegated to such representatives.

c. ***"Contractor":*** The person, persons, firm or corporation to whom the within contract is awarded by the Owner, and who is subject to the terms of said contract. Also the agents, employees, workmen, or assignees of said Contractor.

d. ***"Sub-Contractor":*** A person, firm or corporation other than the Contractor, supplying labor and materials, or labor only, on work at the site of the project.

e. ***"Work":*** All work including materials, labor, supervision, use of tools necessary to complete the project in full compliance with the terms of the contract.

f. ***"Engineer":*** The person, persons or firm named in the Instructions to Bidders as having prepared the Contract Documents, or other Engineers appointed by the Owner for the supervision of construction of the project.

g. ***"Surety":*** The person, firm or corporation that has executed, as Surety, the Contractor's Performance Bond, securing the performance of the within contract.

h. ***"Contract":*** The term "Contract" shall be understood to mean the agreement covering the performance of the work covered by these specifications, including the Instructions to Bidders, Bid Proposal, Bid Conditions, Bid Schedule, Standard Form of Contract Bond, Performance Bond, these Specifications, supplemental agreements entered into, all general or special provisions pertaining to the work or materials therefore, and all matters and things mentioned in the form of the contract itself as constituting a part or parts thereof.

2. **HOLD HARMLESS AGREEMENT (CONTRACTUAL LIABILITY):**
The Bidder agrees to indemnify and save harmless the City, including its elected or appointed officials, employees, and agents against any and all claims, loss, damage, injury, liability, and court costs and attorney's fees incident thereto, including any claims made by employees of the Bidder or any of their subcontractors, as well as all other persons, resulting directly or indirectly from the work covered by this contract or the equipment used in connection therewith. It is understood that this agreement shall apply to any and all such claims whether resulting from the negligence or the

intentional acts of the Bidder, or otherwise, provided, however, this indemnification shall not apply to any claim, damage, loss, or expense arising solely out of professional services performed by the City, its agents, or employees, including 1) the preparation of maps, plans, opinions, reports, surveys, designs, or specifications, and 2) supervisory, inspection, or engineering services).

Special Requirement: If the Bidder is an architectural firm or engineering firm, said Bidder shall, in addition to the insurance requirements set forth below, file a certificate of insurance for professional liability, errors and omissions coverage subject to final acceptance by the City of said coverage. Professional Liability Insurance is requirements are in the amount of $1,000,000, plus $2,000,000 umbrella.

3. **CONTRACTOR'S INSURANCE:**.

The Bidder will provide certificates of insurance evidencing the following types and limits of insurance. The certificates of insurance will specifically address each of the requirements noted below. Each insurance company shall be acceptable to the City. The General Liability coverage shall name the City of Batavia as additional insured. All insurance noted below is primary and in no event will be considered contributory to any insurance purchased by the City. All insurance noted below will not be canceled, reduced, or materially changed without providing the City thirty (30) days advance notice, via certified mail.

a. **Comprehensive General Liability** including Products Liability/Completed Operations insurance, in an amount not less than $1,000,000/occurrence, $2,000,000/policy limit, including Broad Form Contractual Liability insurance, in an amount not less than $1,000,000/occurrence, $2,000,000/policy limit, subject to the terms and conditions of the policy, plus $2,000,000 umbrella. A copy of the policy may be required.

b. **Automobile Liability** insurance, in an amount not less than $1,000,000 combined single limit, plus $2,000,000 umbrella. Said insurance is to be extended to cover hired and non-owned vehicles.

c. **Umbrella or Excess Liability** coverage, the Contractor shall provide evidence of Umbrella or Excess Liability coverage of $2,000,000.

d. **Workers' Compensation** is to be provided as required by statute.

e. **Insurance Rating** – All insurance policies required by this contract shall be underwritten by insurance companies with a minimum A. M. Best rating of A:VIII.

f. A **Certificate of Insurance** is required as evidence of coverage, with the City of Batavia named as an additional insured. The same full insurance coverage provided to the named insured, whether it is the Contractor or a sub-contractor, shall be provided to the City without any limitations or endorsements that might limit or exclude coverage. If insurance is canceled for any reason whatsoever the City will be given not less than thirty (30) days prior written notice.

The Bidder shall not commence work under this contract until they have obtained all insurance required under this section and such insurance has been approved by the City, nor shall Bidder allow any subcontractor to commence work on their subcontract until the same insurance has been obtained by the subcontractor. The Bidder and their subcontractor(s) shall maintain all insurance required under paragraphs A through D of this Section for not less than one (1) year after completion of this contract.

4. **PROOF OF CARRYING INSURANCE:**

The Contractor shall furnish the Owner with satisfactory proof of carriage of the insurance required in a reliable company or companies, before commencing any work. Such proof shall consist of certificates executed by the representative insurance companies and filed with Owner. The Contractor shall submit the original insurance policies for inspection and approval of the Owner before work is commenced. Said policies shall not thereafter be canceled, permitted to expire, or be changed without written notice of ten (10) days in advance to the Owner and consented to by the Owner.

The Contract shall name the City of Batavia as an additional insured on all insurance policies required under this contract. Unless waived by the City, work may not start under this project, until certificates of insurance naming the City as an additional insured have been provided to the City. Any delay in the beginning of work caused by failure to provide such certificates shall not be chargeable to the City of Batavia.

5. **DEFINITION OF NOTICE:**

Where in any section of the Contract Documents there is any provision in respect to the giving of any notice, such notice shall be deemed to have been given;

a. ***As to the Owner***: When written notice shall be delivered to the Engineer of the Owner, or shall have been placed in the United States mails addressed to the Chief Executive Officer of the Owner at the place where the bids, or proposals for the contract were opened;

b. ***As to the Contractor:*** When a written notice shall be delivered to the chief representative of the Contractor at the site of the project to be constructed under the contract, or when such written notice shall have been placed in the United States mails addressed to the Contractor at the place stated in the papers prepared by the Contractor to accompany their proposal as the address of the Contractor's permanent place of business;

c. ***As to Surety:*** On the Performance Bond, when a written notice is placed in the United States mails addressed to the Surety at the home office of such Surety, and when two (2) copies of such notice shall have been filed with the Owner.

6. **INTENT OF CONTRACT DOCUMENTS:**

The sections of the Contract Documents and the contract plans are complementary,

and what is called for by one shall be as binding as if called for by all. The intention of the contract documents is to include in the contract price the cost of all labor, water, fuel, tools, plant equipment, light, transportation, and all other expense as may be necessary for the proper execution of the work.

In interpreting the contract documents, words describing materials or work which have a well-known technical or trade meaning, unless otherwise specifically defined in the contract documents shall be construed in accordance with such well-known meaning recognized by architects, engineers and the trade.

The Contractor shall execute any work shown on the plans and not covered in the specifications or included in the specifications and not shown on the plans as though shown both on the plans and included in the specifications. If the plans and specifications should be contradictory in any part, the specifications shall govern.

7. **PLANS AND SPECIFICATIONS:**

All work executed in strict conformity with the plans and specifications, and the Contractor shall do no work without proper drawings and instructions.

Unless otherwise provided in the Special Conditions of the Contract, the Owner will furnish the Contractor, free of charge, three (3) copies of drawings and specifications. Additional copies will be furnished upon payment to the Engineer, at the Contractor's cost, for each set desired.

Figured dimensions on the plans shall be taken as correct, but shall be checked by the Contractor before starting construction. Any errors, omissions, or discrepancies shall be brought to the attention of the Engineer, and the Engineer's decision thereon shall be final. All notes on the plans shall be followed. The Engineer may make correction or errors, or omissions on the drawings or specifications when such correction is necessary for the proper execution of the work.

8. **PERMITS, SURVEYS AND COMPLIANCE WITH LAWS:**

The Contractor shall procure and pay for all permits, licenses and bonds necessary for the prosecution of the work and/or required by Municipal, State and Federal regulations, and laws, unless otherwise specified in the Special Conditions of the Contract.

The Owner will furnish all site surveys, unless otherwise provided in the Special Conditions of the Contract.

The Contractor shall give all notices, pay all fees and comply with all Federal, State and Municipal laws, ordinances, rules and regulations, and building and construction codes bearing on the conduct of the work. The contract as to all matters not particularly referred to and defined herein shall notwithstanding be subject to the provisions of all pertinent ordinances of the Municipality within whose limits the work is constructed, (which ordinances are hereby made a part hereof with the same force and effect as if specifically set out herein).

9. **OTHER CONTRACTS:**
The Owner may award other contracts for additional work at the site of the project (or other locations) and the Contractor shall fully cooperate with such other Contractors and carefully set the Contractor's own work to that provided under other contracts as may be directed by the Owner. The Contractor shall not commit or permit any act, which will interfere with the performance of work by any other Contractor.

10. **SCHEDULE OF UNIT PRICES:**
Promptly following the execution of the Contract Documents, on Lump Sum Contracts, the Contractor shall prepare and transmit to the Owner an original and three (3) copies of an itemized breakdown showing the unit quantities of each item and the corresponding unit prices divided between labor, material and other costs of all items of labor, equipment and supplies to be incorporated into the project. This breakdown, when approved, will be used primarily in determining payment due to the Contractor on periodical estimates.

11. **SUB-CONTRACTORS:**
The Contractor shall notify the Owner in writing of the names of the Sub-Contractors proposed on the contract and shall not employ any Sub-Contractor that the Owner objects to as being incompetent or unfit.

The Contractor agrees to be fully responsible to the Owner for the acts or omissions of their Sub-Contractors and of anyone employed directly or indirectly by the Contractor of them and this Contract obligation shall be in addition to the liability imposed by law upon the Contractor.

Nothing contained in the Contract Documents shall create any contractual relationship between any Sub-Contractor and the Owner.

The Contractor agrees to bind every Sub-Contractor (any and every Sub-Contractor of a Sub-Contractor) by the terms of the General and Special Conditions of the Contract, Plan and Specifications as far as applicable to their work, unless specifically noted to the contrary in a Sub-Contract approved in writing as adequate by the Owner.

12. **ASSIGNMENT OF CONTRACT:**
No assignment by the Contractor by a principal and/or construction contract or any part thereof or of the funds to be received thereunder by the Contractor will be recognized unless such assignment has had the written approval of the Owner, and the Surety has been given due notice of such assignment and has furnished written consent thereto. Such written approval by the Owner shall not relieve the Contractor of the obligation incurred by the Contractor under the terms of this Contract. In addition to the usual recitals in assignment contracts, the following language must be set forth:

"It is agreed that the funds to be paid to the assignee under this assignment are

subject to a prior lien for services rendered or materials supplied for the performance of work called for in said contract in favor of all persons, firm or corporations rendering such services or supplying such materials."

13. **STAKING WORK:**
The Contractor shall provide field forces, equipment, and material to set all stakes for this project, which are needed to establish offset stakes, reference points, and any other horizontal or vertical controls, including supplementary bench marks, necessary to secure a correct layout of the work.

Stakes for line and grade shall be set at sufficient station intervals (not to exceed 15 m (50 ft.)) to assure substantial conformance to plan line and grade. The Contractor will not be required to set additional stakes to locate a utility line which is not included as a pay item in the contract, nor to determine property lines between private properties.

The Contractor shall be responsible for having the finished work conform to the lines, grades, elevations and dimensions called for in the plans. Any inspection or checking of the Contractor's layout by the City Engineer and the acceptance of all or any part of it shall not relieve the Contractor of the Contractor's responsibility to secure the proper dimensions, grades and elevations of the several parts of the work. The Contractor shall exercise care in the preservation of stakes and benchmarks and shall have them reset at the Contractor's expense when any are damaged, lost, displaced, or removed or otherwise obliterated.

14. **NOTICE TO START WORK:**
The Contractor shall notify the Engineer in writing forty-eight (48) hours before starting work at the site of this Contract. In case of temporary suspension of the work, the Contractor shall give a similar notice before resuming work.

15. **SUPERINTENDENT:**
The Contractor shall provide a personal superintendent to the work or have at the site of the work at all times, a competent, fluently English speaking foreman, superintendent or other representative satisfactory to the Owner and having authority to act for the Contractor.

Insofar as it is practicable, and excepting in the event of discharge by the Contractor, or in the event of proven incompetence, the individual who has been accepted to represent the Contractor shall so act, and shall follow without delay instructions of the Engineer in the prosecution of the work in conformity with the contract.

16. **MATERIALS AND WORKMANSHIP:**
Unless otherwise stipulated in the specifications, all workmanship, equipment, materials and articles incorporated in the work covered by this Contract are to be new and of the best grade of their respective kinds for the purpose.

If not otherwise provided, work called for in this Contract shall be furnished and

performed in accordance with well known established practice and standards recognized by architects, engineers and the trade. The Contractor and the Surety shall guarantee all workmanship for a period of one (1) year from date of final acceptance.

Any workmanship found at any time to be defective shall be remedied at once regardless of previous inspections.

At any time during the course of construction of this project, when in the opinion of the Engineer, provisions of the plans, specifications, or contract provisions are being violated by the Contractor or the Contractor's employees, the Engineer shall have the right and authority to order all construction to cease, until arrangements satisfactory to the Engineer are made by the Contractor for resumption of the work in compliance with the provisions of the contract.

17. **USE OF JOB SITE:**
The Contractor shall confine their equipment, apparatus, the storage of materials and operations of the workmen to limits indicated by law, ordinance, permits or direction of the Owner and shall not encumber the premises with the Contractor's materials.

The Contractor shall not load or permit any part of the structure or work to be loaded with a weight that will endanger its safety. The Contractor shall enforce the Owner or Owner's authorized representative instructions regarding signs, advertisements, fires and smoke.

18. **USE OF PRIVATE LAND:**
The Contractor shall not use any vacant lot or private land as a plant site, depository for materials, or as a spoil site without written authorization of the Owner (or the Owner's agent) of the land, a copy of which authorization shall be filed with the Owner.

19. **LABOR:**
The Contractor shall employ none but competent and skilled workmen and foremen in the conduct of work in this Contract. The Owner shall have the authority to order the removal from the work of any Contractor's employee who refuses or neglects to obey any of its instructions, or those of its Engineer or inspectors relating to the carrying out of the provisions and intent of the provisions of the contract, or who is incompetent, unfaithful, abusive, threatening, or disorderly in their conduct, and any such person shall not again be employed on this project.

20. **WAGE RATES:**
Federal minimum wage rates shall apply for this project. A copy of the current Federal minimum wage(s) is included in these documents.

The Contractor shall post, at conspicuous points on the site of the project, a schedule showing all determined minimum wage rates and will authorize deductions, if any, from unpaid wages actually earned.

The Owner shall decide claims and disputes pertaining to the classification of labor employed on the project under this Contract. Provided, that if the parties to the dispute so agree and if the Owner also agrees, the parties concerned may submit such claims and disputes to arbitration by mutually acceptable parties.

The Contractor and each of their Sub-Contractors shall pay each of their employees engaged in work on the project under this Contract in full (less deductions made mandatory by law) not less often than once each week.

21. **ACCIDENT PREVENTION:**
Precaution shall be exercised at all times for the protection of persons (including employees) and property. The safety provisions of applicable laws, building and construction codes shall be observed. Machinery equipment and all hazards shall be guarded or eliminated in accordance with the safety provisions of the Manual of Accident Prevention in Construction, published by the Associated General Contractors of America, to the extent that such provisions are not contravention of applicable law.

The Contractor shall put up and maintain as many barriers as will effectively prevent accidents. During night hours, the Contractor shall put up and maintain sufficient lights and flares to warn and safeguard the public against accidents. The Contractor, in executing the work on this project, shall not unnecessarily impede or interfere with traffic on public highways or streets. The Owner shall be the sole judge as to what constitutes a hazard to traffic. The Contractor shall confer with and keep Police and Fire Departments of the Owner fully informed as to streets or alleys are to be closed to traffic for construction purposes.

22. **SANITARY CONVENIENCES:**
The Contractor shall provide and maintain on the construction work at all times, suitable sanitary facilities for use of those employed on this Contract without committing any public nuisance. Pit type toilets shall be of proper design and fly tight. All toilet facilities shall be subject to approval of the State Health Department.

23. **ENGINEER:**
The Engineer for said Owner shall make all necessary explanations as to the meaning and intention of the plans and specifications, shall give all necessary orders and directions, acting within the scope of the particular duties properly assigned to the Engineer by the Owner; shall also make all correction of errors or omissions in the plans and specifications when necessary for the proper fulfillment of the intention thereof; the effect of such correction to date from the time said Owner or Engineer gives due notice thereof to said Contractor.

24. **DECISIONS OF ENGINEER:**
The decision of the Engineer, acting within the scope of the duties reasonably assigned to the Engineer, will be final. The signing of the contract for construction shall be considered as the Contractor's agreement to accept the Engineer's decision

as final in all such matters as may reasonable require engineering decisions, such as the quality of workmanship, the performance of equipment and of the fulfillment of the guarantee thereon.

25. **DIRECTION:**
The directions and orders given by the Owner, or its authorized representatives, shall be received by and obeyed by the Contractor, or in the Contractor's absence, the said order shall be received by the Contractor's foreman or person in charge of the work and shall be obeyed by same as if given to the Contractor. There shall be at all times a competent and responsible person available to represent the Contractor.

26. **INSPECTION:**
The Owner and its representative shall at all times have access to the work wherever it is in preparation or progress and the Contractor shall provided proper facilities for such access and for inspections.

The Owner shall have the right to reject workmanship, which is defective, or require their correction. If the Contractor does not correct such condemned work within a reasonable time, fixed by written notice, the Owner may remove them and charge the expense to the Contractor.

Should it be considered necessary or advisable to the Owner at any time before final acceptance of the entire work to make an examination of the work already completed, by removing or tearing out same, the Contractor shall, on request, promptly furnish all necessary facilities, labor and materials to do so. If due to fault of the Contractor or the Sub-Contractor, the Contractor shall defray all the expense of such examination and of satisfactory reconstruction.

If; however, such work is found to meet the requirements of the contract, the actual cost of labor and materials necessarily involved in the examination and replacement, plus fifteen percent (15%), will be allowed the Contractor.

All labor performed, all tools, appliances and methods used shall be subject to the inspection and approval or rejection of the Owner.

If any authorized agent of the Owner shall point out to the Contractor, the Contractor’s foreman or agent, any neglect or disregard to the contract provisions, such neglect or disregard shall be remedied and further defective work be at once discontinued. The right of final acceptance or rejection of the work; however, will not be waived by reason thereof nor by any other act of the Owner or its agents.

The Contractor shall execute the work only in the presence of the Engineer or inspectors during the working hours of the day unless provision has been made for work on other shifts. The presence of the Engineer or inspector shall in no way relieve the Contractor of the responsibility of the Contractor’s contract, or by any warrant for the furnishing of poor workmanship.

The inspection and supervision of the work by the Engineer is intended to aid the Contractor in applying labor, materials and workmanship in compliance with the contract provisions. Such inspection and supervision, however, shall not operate to release the Contractor from any of the Contractor's contract obligations.

27. **PROTECTION OF WORK:**
The Contractor shall continuously maintain adequate protection of all their work from damage and shall protect the Owner's and adjacent property from injury arising in connection with this contract.

The Contractor will be responsible for any and all damage to property, public or private, that may be caused by the Contractor's operations, in the performance of this Contract, and the Contractor shall defend any suit that may be brought against the Contractor or the Owner on account of damage inflicted by the Contractor's operations, and shall pay any judgments awarded to cover such damage.

28. **OBSTRUCTION AND RESUMING TRAVEL:**
Travel upon the streets, or upon any intersecting street or alley shall not be hindered or inconvenienced needlessly; nor shall any portion of the roadway or street be opened up, nor shall the same be wholly obstructed without the direction of the Owner, in which latter case, the Contractor shall cause plain and properly worded signs announcing the fact, to be placed, with proper barricades, at the nearest cross streets upon each side of such obstructed portion and upon intersecting streets where travel can pass around the same in the shortest and easiest way. Travel may be resumed at the direction of the proper officers of the Owner upon any part or portion of the street where the work has been completed, whenever, in their opinion, public necessity or convenience may require, and the condition of improvement warrants it. Notice shall be given to the **Fire and Police Departments** of streets open or barricaded for construction purposes at least twenty-four (24) hours before construction is begun.

29. **COST OF SERVICES:**
The cost of all water power, lighting, heating and other services required during construction shall be paid for by the Contractor and its cost merged in the contract price.

30. **PAYMENTS:**
The Contractor shall prepare and submit to the Owner a detailed estimate of the work performed. Such estimate is to be used after approval as a basis for periodical and final payment.

The Owner will make partial payments to the Contractor on the basis of a duly certified approved estimate of the work performed by the Contractor during the preceding time period. The Owner will retain ten percent (10%) of the amount due to each such periodical estimate until final completion and acceptance by the Owner of all work included in the Contract.

Upon presentation of certified copies of receipted bills, freight bills, and waivers of lien, the Owner at its discretion, may include in such monthly estimates payments for materials that will eventually be incorporated in the project, provided that such material is suitably stored on the site of the project at the time of submission of the estimate for payment. Such material when so paid for by the Owner becomes the property of the Owner and, in case of default on the part of the Contractor; the Owner may use or cause to be used by others these materials in construction of the project.

Final payment of the ten percent (10%) retained by the Owner on the monthly periodical estimates and on the final estimate will be paid to the Contractor not later than sixty (60) days after acceptance by the Owner of the work on this Contract, subject to the provisions of the following paragraph.

31. **OWNER'S RIGHT TO WITHHOLD CERTAIN AMOUNTS AND MAKE APPLICATION THEREOF:**
The Owner may withhold, in addition to retained percentages, from payment to the Contractor, such an amount or amounts as may be necessary to cover:

a. Payments that may be earned or due for just claims for labor or materials furnished in and about the work.
b. For defective work not remedied.
c. For failure of the Contractor to make proper payments to their Sub-Contractor.
d. Reasonable doubt that the contract can be completed for the balance then unpaid.
e. Evidence cost of field engineering and inspection.

The Owner shall disburse and shall have the right to act as agent for the Contractor in disbursing such funds as have been withheld, pursuant to this paragraph, to the party or parties who are entitled to payment therefrom. The Owner will render to the Contractor a proper accounting of all such funds disbursed in behalf of the Contractor.

The Owner also reserves the right, even after full completion and acceptance of the work, to refuse payment of the final ten percent (10%) due the Contractor until it is satisfied that all Sub-Contractors, material suppliers and employees of the Contract have been paid in full.

32. **DEDUCTIONS FOR UNCORRECTED WORK:**
If the Owner deems it expedient to accept defective work or work not done in accordance with the contract, the Owner will make an equitable adjustment with a proper deduction from the contract price for unsatisfactory work.

33. **CHARGES-PAYMENTS:**
The Owner, may issue written authorization for changes in the work to be performed or the materials to be furnished pursuant to the provisions of this contract.

Adjustments, if any in the amount to be paid to the Contractor by reason of any such change, shall be determined by one (1) or more of the following methods:

a. By unit prices contained in the Contractor's original bid and incorporated in this construction contract;
b. By a supplemental schedule of prices contained in the Contractor's original bid and incorporated in this construction contract;
c. By an acceptable lump sum proposal from the Contractor;
d. On a cost-plus-limited basis not to exceed a specific limit (defined as the cost of labor, materials, and insurance plus a specified percentage of the cost of such labor, materials, and insurance); provided the specified percentage does not exceed fifteen percent (15%) of the aggregate of the cost of such labor, materials and insurance.

No claim for an additional work to the contract sum shall be valid unless prior written authorized has been issued by the Owner.

Inspectors are not authorized at act for the Owner in giving orders for the Owner, for extra or additional work either in writing or verbally.

34. **CUTTING AND PATCHING:**
The Contractor shall do all cutting, fitting or patching of their work that may be required to make its several parts fit together or to receive the work of other contractors shown upon, or reasonably implied by the plans and specifications for the completed project.

Any cost caused by defective or ill-timed work shall be borne by the party responsible therefore.

The Contractor shall not endanger any work by cutting, digging, or otherwise shall not cut or alter the work of any other contract without the consent of the Owner or the Owner's authorized representative.

35. **GUARANTEE AND MAINTENANCE OF WORK:**
The Contractor shall guarantee the work to be free from defects of any nature for a period of one (1) year from and after the final acceptance and payment for the work by the Owner. The Contractor shall maintain said work and shall make all needed repairs, reconditioning and replacements during this one (1) year period which, in the judgment of the Owner, may be necessary to insure the delivery of the work to the Owner at the expiration of the guarantee period in first class condition and in full conformity with the plans and specifications thereof. The time that the work is in need of repair, reconditioning or replacements to attain full conformity with the plans and specifications shall not be included in the one (1) year guarantees included in this Contract but shall be in addition thereto. Production and performance guarantees included in this Contract shall be in effect for the one (1) year period above specified unless otherwise provided for in the specifications for the item under consideration.

36. **TERMINATION FOR BREACH:**
In the event that any of the provisions of this Contract are violated by the Contractor

or any of their Sub-Contractors, the Owner may serve written notice upon the Contractor and the Surety of its intention to terminate such contract and unless within ten (10) days after the serving of such notice upon the Contractor, such violation shall cease and satisfactory arrangement for correction be made, the contract shall, upon expiration of said ten (10) days, cease and terminate. In the event of any such termination the Owner shall immediately serve notice thereof upon the Surety and the Contractor and the Surety shall have the right to take over and perform the contract, provided, however, that if the Surety does not commence performance whereon within thirty (30) days from the date of mailing to such Surety notice of termination, the Owner may take over the work and prosecute the same to completion by contract for the amount and at the expense of the Contractor and the Contractor and the Contractor's Surety shall be liable to the Owner for any excess cost thereby occasioned by the Owner.

37. **CORRECTION OF WORK AFTER FINAL PAYMENT:**
Neither the final payment nor any provision in the contract documents shall relieve the Contractor of the responsibility for negligence or faulty workmanship as otherwise provided in this contract and the Owner shall have all rights and remedies available to it in law and equity.

38. **OWNER'S RIGHT TO DO WORK:**
If the Contractor shall neglect to prosecute the work properly or fail to perform any provision of this Contract, the Owner, after three (3) days written notice to the Contractor and the Contractor's Surety, may, without prejudice to any other remedy he may have, make good such deficiencies and may deduct the cost thereof from the payment due the Contractor.

39. **FINAL TESTS:**
After completion of the work, the Contractor shall make any and all tests required by Municipal or State regulations and, where so provided in said regulations, shall furnish the Owner with certificates of inspection by the Municipal or State regulation bodies. The Contractor shall also make all test required by the National Board of Fire Underwriters for the purpose of determining insurance rates or other protection of the Owner or the public.

40. **CLEANING UP AND FINAL INSPECTION:**
The Contractor shall at all times keep the site of the work free from accumulations of waste material or rubbish caused by their employees or work and at the completion of the work the Contractor shall remove all their rubbish from the above the work and all their tools, equipment, scaffolding and surplus materials and shall leave their work clean and ready for use. In case of dispute, the Owner may remove the rubbish and surplus materials and charge the cost to the several Contractors if more than one (1) is employed on the project in proportion to the amount as shall be determined to be just. The Contractor and Sub-contractors shall not dispose of any waste material or rubbish in an open utility trench or a utility trench that is being backfilled.

On or before completion of the work, the Contractor shall, without charge, tear down

and remove all buildings and other structures built by the Contractor for facilitation of the execution of the work, and shall remove all rubbish of all kinds from the grounds, which the Contractor has occupied, and shall leave the work clean and in good condition.

All sewers, conduits, pipes and appurtenances and all tanks, pump wells, chambers, buildings, and other structures shall be kept clean during construction and as the work, or any part thereof, approached completion, the Contractor shall systematically and thoroughly clean and make any needed repairs to them. The Contractor shall furnish, at their own expense, suitable tools and labor for removing all water and cleaning out all dirt, mortar, and foreign substances. The Contractor, at their expense, shall promptly correct any undue leakage of water into the structures that would, in the sole opinion of the Engineer, render the work to be less than first class quality Cleaning and repairs shall be arranged, so far as practicable, to be completed upon finishing the construction work. Notice to begin the final cleaning and repairing, as such is needed, will be given by the Engineer, who at the same time may make a final inspection of the work. The Engineer will not approve the final estimate of any portion of the work until after the final inspection is made and the work found satisfactory.

41. **MEASUREMENT OF WORK:**
If the proposal for the work under this Contract is on a unit price basis, the actual number of units of each item of work to be constructed may be more or less than the corresponding number given in the proposal sheet or plan, but no variation will be made in the contract unit prices on that account. No extra or customary measurement of any kind will be allowed in measuring the units of work under this Contract, but the actual units of work shall be considered and all lengths will be measured on the centerline of the work, whether straight or curved. The Contractor will be paid the contract price for each unit of work done, which price will include the cost of all work described in the unit specifications.

42. **FINAL ACCEPTANCE OF THE WORK:**
The Contract shall be deemed as having been finally accepted by the Owner, acting through its Engineer, upon final inspection and written notice by the Engineer. Use of part of the improvement by the Owner before completion of the entire project is not to be construed by the Contractor as an acceptance by the Owner of that part so used.

43. **FAILURE TO COMPLETE THE WORK ON TIME (LIQUIDATED DAMAGES):**
Should the Contractor fail to complete the work within the contract time, the Contractor shall be liable to the Owner in the amount of seven hundred fifty dollars ($750.00) a day as liquidated damages, for each day of over run in the contract time.

44. **FREEDOM OF INFORMATION (FOIA) REQUIREMENTS:**

Contractor acknowledges that the Freedom of Information Act, 5 ILCS 140/1 et seq. (the “Act”) places an obligation on the City to produce certain records that may be in the possession of Contractor. Contractor shall comply with the record retention and

documentation requirements of the Local Records Retention Act 5 ILCS 160/1 et seq. and shall maintain all records relating to this Agreement in compliance with the Local Records Retention Act. Contractor shall review its records promptly and produce to the City within two business days of contact from the City the required documents responsive to a request under the Act. If additional time is necessary to comply with the request, the Contractor may request the City to extend the time do so, and the City will, if time and a basis for extension under the Act permits, consider such extensions.

PART III

Standard Specifications……..……..……..SS 1

Special Provisions Table of Contents ……..……..…..SP-TOC 1 -2

Special Provisions……..……..……..SP 1 - 15

STANDARD SPECIFICATIONS

STANDARD SPECIFICATIONS APPLICABLE TO THIS WORK AND CONTRACT:

1. The City Code of Batavia, Illinois.

2. "Standard Specifications for Road and Bridge Construction", Illinois Department of Transportation, (SSRBC), latest edition.

3. "Supplemental Specifications and Recurring Special Provisions", Illinois Department of Transportation, latest edition.

4. The attached Illinois Department of Transportation traffic control and protection standards.

5. "Standard Specifications for Water and Sewer Main Construction in Illinois", (SSWSMC), latest edition.

In the event of conflict between specifications, the more stringent requirements shall apply. Notify the City Engineer of any conflicts between specifications discovered prior to proceeding with work covered by conflicting specifications. The City Engineer will resolve all conflicts.

Copies of said Standard Specifications are on file with the City Engineering Department for inspection.

CITY OF BATAVIA

SPECIAL PROVISIONS

WILSON STREET SIDEWALK CONSTRUCTION PROJECT

City Contract No.: SWB-15-001

TABLE OF CONTENTS

GENERAL 1

LOCATION OF PROJECT 1

DESCRIPTION OF PROJECT 1

DEFINITION OF TERMS 1

BID SUBMITTAL REQUIREMENTS 1

COMPLETION DATE 2

FAILURE TO COMPLETE THE WORK ON TIME 2

CONTACTS 3

CONSTRUCTION SCHEDULE 3

MATERIAL STORAGE 3

CONSTRUCTION NOISE RESTRICTIONS: 3

SEQUENCE OF OPERATIONS 4

APPROVAL OF SUBCONTRACTORS 4

ALTERATIONS, CANCELLATIONS, EXTENSIONS, AND DEDUCTIONS 4

CONTRACTOR PAYOUTS – REQUIRED SUBMITTALS 4

RESIDENT NOTIFICATIONS 5

USE OF FIRE HYDRANTS 5

CONTRACTOR MOBILIZATION 5

DUST CONTROL 5

DISPOSAL OF DEBRIS, EXCESS MATERIALS 5

INVESTIGATION OF CONDITIONS 6

LIMITS OF REMOVAL 6

RESTORATION 6

SITE CONSTRUCTION 7

SP-1 NEW PORTLAND CEMENT CONCRETE SIDEWALK & SIDEWALK REMOVAL 7

SP-2 COMBINATION CURB AND GUTTER REMOVAL & REPLACEMENT 8

SP-3 HOT MIX ASPHALT DRIVEWAY REMOVAL & REPLACEMENT 11

SP-4 PROTECTIVE COAT 11

SP-5 DETECTABLE WARNINGS 11

SP-6 STREET CLEANING 12
SP-7 TRAFFIC CONTROL PLAN 13
SP-8 MAINTENANCE OF EXISTING UTILITIES 14
SP-9 CONCRETE CURB REMOVAL 14
SP-10 REMOVAL AND DISPOSAL OF UNSUITABLE MATERIAL 14
SP-11 CONSTRUCTION LAYOUT 14
SP-12 LANDSCAPING, SPECIAL 15

CITY OF BATAVIA

SPECIAL PROVISIONS

WILSON STREET SIDEWALK CONSTRUCTION PROJECT

City Contract No.: SWB-15-001

GENERAL

The following Special Provisions supplement the "Standard Specifications for Road and Bridge Construction" adopted April 1, 2016, (hereafter referred to as the Standard Specifications); the "Manual on Uniform Traffic Control Devices for Streets and Highways" in effect on the date of invitation for bids; and the "Supplemental Specifications and Recurring Special Provisions", adopted April 1, 2016. In case of conflict with any parts of said specifications, the said Special Provisions shall take precedence and shall govern.

LOCATION OF PROJECT

The Wilson Street Sidewalk Construction project location is located between Woodland Hills Road and Kirk Road on the north side of Wilson Street in the City of Batavia, Kane County, Illinois. A location map is included in Part IV of the Specifications.

DESCRIPTION OF PROJECT

The work will consist of the furnishing of all equipment, materials, labor, and incidentals necessary to complete the construction of a new Portland cement concrete sidewalk in the locations as provided in the project Plans.

DEFINITION OF TERMS

City: The City of Batavia and its agents and/or representatives.

Engineer: The City of Batavia Engineer or Engineer employed by the City of Batavia or authorized representatives.

Contractor: The individual, firm, partnership, joint venture, or corporation contracting with the City of Batavia for performance of the prescribed work. Only qualified firms shall perform new construction and the annual sidewalk repair program. The criteria used to determine the qualifications of any bidder shall be as follows:

- Current, pre-qualified contractor for the Illinois Department of Transportation.
- Minimum of not less than five (5), positive references from other Municipal Sidewalk repair projects performed during the past three years, from date of bid opening.
- Prior City of Batavia Sidewalk Replacement Program contractor with approval of City Engineer or the Street Superintendent.

All definitions stated in Section 101 of the Standard Specifications shall apply to this contract. When referring to the "Department" or "State" in all IDOT Specifications and Special Provisions, the Contractor should be aware this means the City of Batavia and its agents and/or representatives.

BID SUBMITTAL REQUIREMENTS

The following documents must be included with the submitted bid:

a. Contract Cover
b. Invitation to Bid

c. Bid Proposal
d. Bid Schedule
e. Proposal Signature
f. Standard Form of Performance Bond
g. BC 57 – IDOT Affidavit of Availability

COMPLETION DATE

Effective: September 30, 1985
Revised: January 1, 2015

Revise Article 108.05 (b) of the Standard Specifications as follows:

> "When a completion date is specified, the Contractor shall complete all contract items, including restoration by 11:59 PM on, June 15, 2016 except as specified herein.

The Contractor will be required to commence work on his contract on or after May 16, 2016 or weather pending as approved by the City Engineer and after notification to begin work has been issued by the Owner, and he shall complete all work within thirty (30) calendar days of receiving the notification to proceed.

Article 108.09 or the Special Provision for "Failure to Complete the Work on Time" shall apply to either the completion date or the extended time to complete the work.

FAILURE TO COMPLETE THE WORK ON TIME

Effective: September 30, 1985
Revised: January 1, 2015

Should the Contractor fail to complete the work on or before the completion date as specified in the Special Provision for "Completion Date", or within such extended time as may have been allowed by the Department, the Contractor shall be liable to the Department in the amount of $750, not as a penalty but as liquidated damages, for each calendar day or a portion thereof of overrun in the contract time or such extended time as may have been allowed.

In fixing the damages as set out herein, the desire is to establish a certain mode of calculation for the work since the Department's actual loss, in the event of delay, cannot be predetermined, would be difficult of ascertainment, and a matter of argument and unprofitable litigation. This said mode is an equitable rule for measurement of the Department's actual loss and fairly takes into account the loss of use of the roadway if the project is delayed in completion. The Department shall not be required to provide any actual loss in order to recover these liquidated damages provided herein, as said damages are very difficult to ascertain. Furthermore, no provision of this clause shall be construed as a penalty, as such is not the intention of the parties.

A calendar day is every day shown on the calendar and starts at 12:00 midnight and ends at the following 12:00 midnight, twenty-four hours later.

CONTACTS

City of Batavia is the lead agency for this project during construction. All coordination relating to construction project and operations shall be made through the City of Batavia Engineering Department, Monday through Friday, 7:00 A.M. to 4:00 P.M. at (630) 454-2750.

CONSTRUCTION SCHEDULE

At the preconstruction conference, the Contractor shall meet with the City and the Engineer and present, in writing, a detailed construction schedule. Said schedule shall contain such information as the Engineer deems necessary, including sequencing of streets and dates for the starting and completing construction operations, location of off-site disposal areas, access routes to be used and location of equipment and material storage sites. Once approved, the Contractor must adhere to the schedule so that field markings of all items of work may proceed in advance of actual construction.

The Contractor shall confirm with the Engineer the scheduled commencement of each construction activity **at least three days in advance** to allow for proper notification of residents and motorists (businesses). The principle activities requiring public notification are removal and replacement of curb, sidewalk and driveway patches across property owners access/driveway, temporary road closures and/or lane reductions.

It is anticipated that the contract for this work will be approved at the May 2, 2016 City Council Meeting.

MATERIAL STORAGE

The Contractor shall not deliver and store any material on the project site more than one week in advance before commencing with his work. Only non-paved portion of the street may be used for any material storage. Any required pavement repair and parkway restoration, due to the damage because of materials storage, shall be borne by the Contractor and be considered included in the cost of the contract.

CONSTRUCTION NOISE RESTRICTIONS

In order to minimize the effect of construction noise on the area surrounding the improvement the Contractor and his subcontractors shall comply with the following requirements. Any changes to this schedule will not be accepted unless approved by the Engineer.

All engines and engine driven equipment used for hauling or construction shall be equipped with an adequate muffler in constant operation and properly maintained to prevent excessive or unusual noises. Any machine or device or part thereof which is regulated by or becomes regulated by Federal or State of Illinois noise standards shall conform to those standards.

Construction operations shall be confined to the daylight hours between 7:00 AM and 7:00 PM, Monday through Saturday. No work of any kind shall be done on Sundays in residential areas unless previously approved by the Engineer. These time restrictions shall not apply to maintenance or operation of safety and traffic control devices such as barricades, signs, and lighting or to construction of an emergency nature. If the Contractor requires additional time to complete a portion of work on a given day or if he foresees the need to work extended hours for a number of days to comply with the construction schedule, he must receive the approval of the Engineer.

SEQUENCE OF OPERATIONS

The Contractor shall coordinate his work in a manner that will cause as little inconvenience to traffic as possible. The Contractor shall work closely with City Officials, Fire and Police Departments in coordinating interruption to normal traffic, access to businesses, and inconveniences to the public.

The suggested work sequence as follows:

a. Provide construction layout and install any necessary erosion measures.
b. Install any necessary traffic control.
c. Sawcut and remove existing curb and gutter as required.
d. Adjust stone base, if needed.
e. Replace sidewalk, curb and add any new sidewalk and/or curb.
f. Apply protective coat (two times).
g. Restore site – Shall be completed within seven days of completing the planting and grading ceases.
h. Sweep street as required.

APPROVAL OF SUBCONTRACTORS

The Contractor shall provide a list of the intended source of materials and the intended Subcontractor to be used for the project. The City of Batavia shall approve all subcontractors to be used on the project and reserves the right to reject the use of any subcontractor due to past performance or the apparent inability to perform the item of the work required of him.

ALTERATIONS, CANCELLATIONS, EXTENSIONS, AND DEDUCTIONS

The City of Batavia has limited amount of funds available to complete this project. Therefore, the Contractor is herein notified that the City of Batavia reserves the right to reduce and/or omit any items as set forth in the Schedule of Prices section of these Contract Documents.

The City of Batavia reserves the right to alter the plans, or shorten the improvement, add or delete such work as may be necessary, and increase or decrease the quantities of work to be performed to accomplish such changes, including the deduction or cancellation of any 1 or more of the Unit Price items, or cancellation of the Contract.

CONTRACTOR PAYOUTS – REQUIRED SUBMITTALS

Contractor payout requests shall be submitted no more than one time per month, and are required to go through a scheduled City Council Meeting to authorize payment. Change Orders, which would cause the Contract to go above Original Contract Amount, will go through scheduled Committee and Council Meetings for approval.

Payment Process:

1. Quantity approval requirements:
   a. Quantities will be calculated and submitted and reviewed/approved by the engineer prior to submitting any invoices. Clearly identify the pay item and quantities used.

2. Invoice submittal requirements:
   a. General invoice for entire project after approval of above.
   b. Lien Waivers from General Contractor and Subcontractors receiving payments. General Contractor Lien Waiver is required to submit invoice and sub-contractor

waivers are preferred at this time as well, but if needed they may be submitted prior to release of check.

3. Payment release requirements:
    a. Lien Waivers from General Contractor and any Subcontractors receiving payments from subject payout.
    b. Copies of Certified Payroll for period when work was completed.
    c. Sworn Statement from General Contractor.

RESIDENT NOTIFICATIONS

The Contractor shall be responsible to notify the City at least 48 hours, but not more than 72 hours, prior to commencement of work for the City to deliver notification letters to all residents adjacent to the subject project affected by the construction (herbiciding, stabilization of shoreline and planting of native plants; construction entrances).

The Contractor shall be responsible for posting suitable advance notice on scheduled to be closed streets, if necessary, during working hours at least 24 hours, but not more than 48 hours, prior to commencement of work. “No Parking” signs displaying construction times shall be placed on roadways 48 hours prior to placement of utility materials. All such notices shall be removed by the Contractor immediately upon the completion of work. This work shall be included in the cost of the contract.

USE OF FIRE HYDRANTS

City water for construction purposes will be available to the Contractor at his cost, according to the fees and rates in effect at the time of usage. The contractor will use water only from a fire hydrant approved by the Public Works Department - Water Division. The contractor shall apply to the Public Works Department – Water Division for usage of a meter in accordance with Department regulations. Meters are available at the Public Works Department located at 200 N. Raddant Road, Batavia, IL 60510; phone 630-454-2450.

CONTRACTOR MOBILIZATION

“This Contract contains no provisions for Contractor Mobilization”; Mobilization is considered included in the cost of this contract.

DUST CONTROL

Dust control shall be considered included in the cost of the contract.

DISPOSAL OF DEBRIS, EXCESS MATERIALS & EXCAVATED OR REMOVED MATERIALS

The Contractor shall be responsible for satisfactory removal and disposal of all waste material, asphalt, concrete, stone, dirt, or debris generated in the course of the work. Removal and disposal of surplus, unstable, and unsuitable materials and organic waste shall follow Section 202 of the standard specifications. All removal or excavation items being disposed of at a landfill or clean construction and demolition debris (CCDD) fill site shall meet the requirements of Public Act 96-1416 and Section 107 of the standard specifications. All costs associated with meeting these requirements shall be included in the unit price cost for the associated removal or excavation items in the contract. These costs shall include but are not limited to all required testing, lab analysis, certification by a licensed professional engineer, and State or Local tipping fees.

"The contractor shall not conduct any generation, transportation, or recycling of construction or demolition debris, clean or general or uncontaminated soil generated during construction, remodeling, repair, and demolition of utilities, structures, and roads that is not commingled with any waste, without the maintenance of documentation identifying the hauler, generator, place of origin of the debris or soil; the weight or volume of the debris or soil, and the location, owner, and operator of the facility where the debris or soil was transferred, disposed, recycled or treated. This documentation must be maintained by the Contractor for 3 years."

The contractor shall load the removed pieces of curb and gutter, sidewalk, driveway and street pavements, etc., directly onto trucks, haul it away, and dispose of it. The temporary storing of excavated materials on the parkways, and rehandling them later for disposal will not be allowed due to additional damage caused to tree root systems, parkways, existing equipment, and conditions. It shall be the contractor's responsibility to find an approved dumpsite for debris and any excavated materials. The City will not provide for one. The stockpiling of excavated or backfill material within the roadway overnight shall not be permitted.

INVESTIGATION OF CONDITIONS

Bidders are required to submit their proposals upon the express condition that they have noted the site of the proposed work and are fully acquainted with work to be performed under this contract. The contractors are expected to make their estimates of the facilities needed and the difficulties attending the execution of proposed contract, including local conditions, availability of labor, weather and other contingencies. In no event will the Local Sponsors assume any responsibility whatever for interpretation, deduction or conclusion drawn from the inspection of the site. Failure to acquaint themselves with all available information concerning these conditions will not relieve the successful bidder from responsibility for estimating difficulties and costs of successfully performing and completing the work.

LIMITS OF REMOVAL

All pay items for removal and replacement must be field measured and marked by the Engineer prior to construction. No payment will be made for any items of work which have been removed and/or replaced without having been field measured and marked by the Engineer. Repairs to asphalt and concrete driveways damaged by contractor not specifically listed in this contract will be considered included. No additional payment will be made for removal and/or replacement beyond field markings unless specifically authorized by the Engineer.

RESTORATION

After removing the forms, and within three (3) working days, the contractor shall backfill to match existing grades with pulverized topsoil. This also includes all driveway repairs and street patching. (NOTE: Matching existing grades of the new sidewalk can extend up to 4' of pulverized topsoil, seed and hydro-mulch) Areas damaged by contractor during the removal process shall be repaired at the contractor's expense as stated above. The pulverized topsoil shall be graded, compacted to prevent settlement and raked smooth prior to seed and hydro-mulch.

Typical restoration shall be limited for payment to 2' behind any curb work or new sidewalk work, 5' wide on either side of the pipe being installed or on either side of a driveway being restored. Restoration quantities beyond 2' for new sidewalk will be measured for payment where required for matching to existing grade to allow for proper drainage or slope as directed by the City Engineer.

SITE CONSTRUCTION

SP-1 NEW PORTLAND CEMENT CONCRETE SIDEWALK AND SIDEWALK REMOVAL

DESCRIPTION: This work shall be in accordance with Section 424 of the Standard Specifications, the details in the plans and the following provisions.

If upon removal of existing sidewalk a suitable sub-base material is encountered, the new concrete may be an constructed over that existing sub-base. However, if a soft or unstable sub-base is encountered, this material shall be excavated and replaced with a minimum of 2" Aggregate Base Course, Type B, CA6. Sidewalk to be installed at new locations will be required to install 4" Aggregate Base Course, Type B, CA6. At locations where the sidewalk is adjacent to driveways or curb and gutter, all voids from the top of sub-base to bottom of sidewalk shall be filled with Aggregate Base Course, Type B. All new sidewalks shall have a minimum thickness of five inches (5"). Sidewalks shall have a minimum thickness of six inches (6") for wheelchair ramps, carriage walks and driveways.

Sidewalk shall have a fine-broomed finish and slope of walk shall be one-fourth inches (1/4") per foot toward roadway. Sidewalk elevation shall be a minimum of six inches (6") above curb to a maximum of eighteen inches (18") above curb – except in special cases as approved by the City Engineer, Street Superintendent, or designee.

Repairs to asphalt and concrete driveways and parking lots damaged by contractor not specifically listed in this contract will be considered included. The limits of the repairs will be as designated by the City Engineer or Street Superintendent.

If equipment must be used on the adjacent asphalt parking lot, 3/4" plywood must be used so tires do not touch pavement.

CONTRACTOR is expected to remove curb and sidewalk in a way to NOT damage adjacent driveways or streets noted "No Repair Needed" on the list of locations. Contractor must use care in these locations and the contractor is responsible for repairs if the driveway or street is damaged where noted "No Repair Needed." The CONTRACTOR shall machine saw a perpendicular joint between that portion of the sidewalk to be removed and that which is to remain in place. If the Contractor removes or damages the existing sidewalk outside the limits designated by the Engineer for removal and replacement, he will be required to repair that portion at his own expense to the satisfaction of the City Engineer or Street Superintendent. The CONTRACTOR shall be responsible for any damage and/or vandalism to the sidewalk during the construction period. Marked or damaged sidewalk shall be removed to the nearest dummy or expansion joint and replaced by the CONTRACTOR at the CONTRACTOR'S expense.

At locations where the proposed sidewalk is to be constructed across trenches, three (3) No.5-10 ten-foot long reinforcement bars shall be placed in the sidewalk centered over the trench. These reinforcement bars shall not be continuous through transverse expansion joints but shall be stopped 3 inches short of same. The cost of these reinforcement bars, complete in place, shall be considered Included in the cost of the sidewalk. All sidewalks adjacent to a driveway apron, wheelchair ramp and/or carriage walk shall be 6 inches and will be considered included in the pay item.

One-half inch (1/2") width bituminous expansion joints the full depth of concrete walk shall be placed every fifty feet (50') of sidewalk length, and where concrete abuts curb and gutter, existing sidewalks and concrete driveways. Control joints shall be struck at five-foot (5') intervals.

Pulverized Topsoil, seed and hydro-mulch restoration is required adjacent to the sidewalk, these will measured and paid for under separate pay items.

METHOD OF MEASUREMENT: This work shall be measured in place per square foot of actual surface area covered.

BASIS OF PAYMENT: The price shall include all necessary labor, materials, equipment needed to install the work, excavation, additional thickness at driveways, forms, gravel, concrete, preformed joint filler, curing compound, pulverized topsoil, grass seed or sod, barricades, finishing described herein and as specified on the plans. This work shall be paid for at the contract unit price per square foot for SIDEWALK REMOVAL and PORTLAND CEMENT CONCRETE SIDEWALK of the thickness specified.

SP-2 COMBINATION CURB AND GUTTER REMOVAL & REPLACEMENT

DESCRIPTION: This work shall be in accordance with Section 606 of the Standard Specifications, the details in the plans and the following provisions. The new curb and gutter must be poured to exactly match the profile of the existing curb and gutter in any area unless the Engineer provides specific direction to adjust line and/or grade. The prevalent type of curb and gutter in this scope of work is a B6.12. The Contractor should field check and examine the actual work locations and be familiar with the existing types of curb and gutter he will be expected to match and bid accordingly.

Repairs to asphalt and concrete driveways damaged by contractor not specifically listed in this contract will be considered included. The limits of the repairs will be as designated by the City Engineer or Street Superintendent.

The type of replacement combination concrete curb and gutter shall match the existing curb and gutter or be of the type specified by the Engineer, where all new curb shall be B6.12. The thickness of the proposed gutter flag shall match the thickness of the adjacent pavement but in no case be less than ten inches (10"). The proposed curb and gutter shall be constructed to a grade established by the Engineer at the time of construction. The Engineer must approve forming methods for pouring the curb and gutter. The use of admixtures to accelerate the hardening of the concrete shall not be used without the approval of the City Engineer or Street Superintendent.

The excavation of the street (for the front board) and the parkway (for the rear board) shall be kept to a minimum in so far as possible and the cost of these excavations and their proper refilling and repair shall be considered as incidental in cost to the new curb and gutter. After the front form board has been removed, the excavation in the street pavement shall be thoroughly cleaned. The excavation shall then be filled with P.C. concrete (Class SI concrete) to within 2.5" of the street surface elevation.

A neat straight saw cut running parallel with the curb shall be made in the existing street pavement just far enough from the curb line to take all of the damaged area in. This saw cut shall be 3" deep. Additional asphalt remaining shall be removed between the saw cut and the curb to a depth

of 3". This void should be cleaned, primed with an emulsified asphalt prime and patched with Hot-Mix Asphalt surface course.

Where curb or curb and gutter removal and replacement is adjacent to a P.C.C. or Hot-Mix Asphalt driveway apron, the old curb must be carefully removed with a jack hammer and by hand so as to not disturb the driveway pavement. If the Contractor does break the adjacent apron, a neat straight saw-cut running parallel with the curb shall be made in the existing driveway apron just far enough from the curb line to take all the damaged area in, removed and replaced at the Contractor's expense. The new curb shall be depressed through driveways unless otherwise directed by the Engineer.

ALTERNATE TO EXCAVATION OF STREET FOR FRONT FORM BOARD:

In some cases, where specifically permitted by the Engineer, the Contractor may want to remove the curb and gutter carefully by hand and not excavate the pavement, thus saving restoration costs. The Engineer may permit the Contractor to attempt this if the following conditions are met:

- Where the integrity of the existing adjacent edge of pavement (and below) is sound and will not crumble.

- Where the edge of the existing adjacent pavement is of exactly the correct grade (not sagged, etc.)

- Where the Contractor will utilize equipment and a method suited to this delicate removal work.

- Where upon careful removal of the existing curb and gutter by the Contractor, the street pavement section exposed holds a vertical face (and does not cave-out or undermine) rendering a straight face against which the new curb and gutter can be poured.

- Where the Contractor can pour a new concrete curb and gutter meeting all of the other conditions of these specifications.

- Where the Contractor can finish the front edge of the new concrete curb and gutter to meet the existing pavement the same or better than if they were constructed in the reverse order.

- Where the Engineer or Inspector can witness this and agree that the work is acceptable by this method.

If the Contractor attempts this alternative method and does not succeed in meeting the aforementioned specifications or if the Engineer does not permit the work to proceed by this alternative, the Contractor must over-dig for form boards, construct the curb and gutter in the conventional method and properly repair the street at his own expense.

In cases where there is an existing pavement not marked for removal adjacent to the back of the curb and gutter, such as a carriage walk, service walk, public sidewalk or driveway apron, etc., this same complete procedure is applicable. Any pavements removed and replaced not specifically marked for removal by the Engineer will not be paid for.

This alternative method of carefully pouring concrete under certain conditions without a form will strictly not be allowed adjacent to dirt and grass areas of the parkway. All replacement segments of concrete curb and gutter poured adjacent to dirt and grass areas must be poured against rigid smooth forms.

EXPANSION AND CONTRACTION JOINTS:

Contraction joints shall be formed every 15' length equal to the width of the gutter or curb and be a minimum 4" in depth. The Contractor may opt to cut these contraction joints in with a saw instead. If so, they must be sawed a minimum of 3" deep between twelve and twenty-four hours (12 and 24) from the time of pour. They must also be cleaned and neatly caulked with a gray or light gray colored urethane polymer sealer compound.

Transverse expansion joints of 3/4" bituminous preformed fiber material cut to exact cross-section of the curb will be placed at forty-five (45) feet intervals in areas where length of replacement will permit. Each fiber joint shall also have two (2) number six (#6) 3/4" x 24" dowel bars with lubricated caps on one end centered and retained with devices to hold the bars in a parallel horizontal position during pouring and placing of concrete. When short sections are replaced, the new section of curb and gutter must have a transverse expansion joint as detailed above if there is no expansion joint within 30'. Expansion joint material and dowel bars shall not be paid for separately but shall be considered as incidental to the combination concrete curb and gutter and no extra compensation will be allowed.

Longitudinal joints at points where proposed or replacement sidewalk, driveway, or curb would touch an existing structure or building shall be filled with 3/4" expansion material of full depth to allow expansion between existing structure and the new or replacement construction.

Where replacement of curb and gutter and sidewalk is specified at street intersections, depressed curb and gutter and sidewalk ramps shall be installed for wheelchair access in accordance with the latest ADA specifications for accessible curb ramps.

Where new sidewalk is being constructed adjacent to new curb, or for any combination of different types of new concrete work, they must be formed and poured separately with full depth fiber joint material in between.

This pay item shall apply to all types and varieties of curb and gutter as measured in place including, but not limited to combination concrete curb and gutter, type M2.12, combination concrete curb and gutter, type B-6.12, or combination concrete curb and gutter, type B-6.18.

Pulverized Topsoil, seed and hydro-mulch restoration is required adjacent to the curb and gutter; it shall be measured separately and paid for under separate pay items.

Where voids occur between the existing pavement and proposed curb it shall be backfilled with concrete to the height of the bottom of the proposed surface course and is considered included in the cost of the pay item. Backfill behind the proposed curb is considered included in the cost of the pay item.

METHOD OF MEASUREMENT: This work shall be paid for at the contract unit price per LINEAL FOOT.

BASIS OF PAYMENT: The price shall include the excavation, traffic control, aggregate base course replacement or fill, earthwork, bedding, Curing/Sealing Compound necessary to complete the curb and gutter described herein and as specified on the plans. This work shall be included and paid for at the contract unit price per linear foot for COMBINATION CONCRETE CURB AND GUTTER REMOVAL AND REPLACEMENT.

SP-3 HOT MIX ASPHALT DRIVEWAY REMOVAL & REPLACEMENT

DESCRIPTION: This item shall consist of Hot-Mix Asphalt driveway surface pavement. The new driveway shall be constructed to match the existing pavement removed for thickness, however the minimum thickness shall not be less than 3 inches of Hot-Mix Asphalt Surface Course, Mix "D", N50. Prior to replacement with the surface course, the exposed base course shall be shaped, compacted and primed, including the exposed edge of the hot-mix asphalt surface remaining, to the satisfaction of the Engineer.

Pulverized Topsoil, seed and hydro-mulch restoration is required adjacent to the driveway, it shall be considered incidental to the pay item.

Note that HMA pavement removal and replacement that is adjacent to combination concrete curb and gutter to be removed will not be paid for separately. The cost for this work shall be considered incidental to the concrete curb and gutter pay item.

METHOD OF MEASUREMENT: This work shall be measured in place per square yard of actual surface areas covered.

BASIS OF PAYMENT: This price shall include the excavation, traffic control, aggregate base course replacement or fill, earthwork and bedding necessary to complete the driveway for HOT MIX ASPHALT DRIVEWAY REMOVAL AND REPLACEMENT.

SP-4 PROTECTIVE COAT

DESCRIPTION: All exposed concrete installed under this Contract (curb & gutter, sidewalk, driveway areas) shall receive a protective surface treatment consisting of two (2) coats of boiled linseed oil and petroleum spirits mixture, with pigmentation, formulated and applied according to Article 420.18 of the "Standard Specifications". If an application of sand is required by the engineer for blotter material, it will be considered included in the cost of this work.

The protective coat shall be and IDOT approved linseed oil compound. Cost to be considered as incidental to the concrete work. Applications must be done on the 7th and 14th day after the pour.

This work shall not be paid for separately but shall be considered included in the cost of the item being installed.

SP-5 DETECTABLE WARNINGS

Replace Articles 424.08 – 424.12 of the Standard Specifications with the following:

424.08 Curb Ramps. Curb ramps shall be constructed according the Americans with Disabilities Act Accessibility Guidelines (ADAAG), the Illinois Accessibility Code, and as shown on the plans. **The Contractor shall utilize non-replaceable (cast in place) vitrified polymer composite detectable tactile warning system in red color as produced by Armor-tile or as approved by City Engineer**.

Curb Ramps shall be constructed to the same thickness as the adjacent sidewalk with a minimum thickness of 5 in.

424.09 Detectable Warnings. Detectable warnings shall consist of a surface of truncated domes meeting the requirements of the ADAAG and the details shown on the plans.

Detectable warnings shall be installed at curb ramps, medians and pedestrian refuge islands, at-grade railroad crossings, transit platform edges, and other locations where pedestrians are required to cross a hazardous vehicular way. Detectable warnings shall also be installed at alleys and commercial entrances when permanent traffic control devices are present. The installation shall be an integral part of the walking surface and only the actual domes shall project above the walking surface.

The product or method used for installing detectable warnings shall come with the following documents, which shall be given to the Engineer prior to use.

(a) Manufacturer's certifications stating the produce is fully compliant with the ADAAG.

(b) Manufacturer's five year warranty.

(c) Manufacturer's specifications stating the require materials, equipment, and installation procedures.

Products that are colored shall be colored their entire thickness.

The materials, equipment, and installation procedures used shall be according to the manufacturer's specifications.

424.10 Backfill. After the concrete has been cured, the spaces along the edges of the sidewalk and ramps shall be backfilled with approved material. The material shall be compacted until firm and the surface neatly graded.

424.11 Disposal of Surplus Material. Surplus or waste material shall be disposed of according to Article 202.03.

424.12 **METHOD OF MEASUREMENT:** This work will be measured for payment in place and the area computed in square feet. Curb ramps will be measured for payment as sidewalk. No deductions will be made for detectable warnings located within the ramp.

Earth excavation will not be measured separately, but shall be considered included in the sidewalk.

424.13 **BASIS OF PAYMENT:** This work will be paid for at the unit price per square foot for DETECTABLE WARNINGS.

SP-6 STREET CLEANING

Special attention shall be paid to Section 107.15 of the Standard Specifications. If the CONTRACTOR fails to clean the pavement adjacent to the section under construction to

the satisfaction of the ENGINEER at any time during the contract, the ENGINEER will notify the CONTRACTOR at which time the CONTRACTOR will have 4 hours to respond. If the CONTRACTOR fails to respond within 4 hours, an amount of $500.00 per incident will be deducted from any monies due the CONTRACTOR. The requirements to satisfy the conditions stated herein shall be considered as included in Erosion Control Maintenance and composited in that pay item.

SP-7 TRAFFIC CONTROL PLAN

Effective: September 30, 1985
Revised: January 1, 2012

DESCRIPTION: Traffic Control shall be according to the applicable sections of the Standard Specifications, the Supplemental Specifications, the "Illinois Manual on Uniform Traffic Control Devices for Streets and Highways", any special details and Highway Standards contained in the plans, and the Special Provisions contained herein.

Special attention is called to Article 107.09 of the Standard Specifications and the following Highway Standards, Details, Quality Standard for Work Zone Traffic Control Devices, Recurring Special Provisions and Special Provisions contained herein, relating to traffic control.

Barricades: All areas where sidewalks, driveway or curb has been removed shall be properly protected by barricades (Type A minimum) until the concrete has been poured, cured and backfilled. All barricades shall have working flashers and placed on average of one barricade per square, two barricades for 2-5 squares or two every 25' including every driveway.

In locations where sidewalks are replaced on both sides of a street, only one side is to be completed at a time. This provides access to residents to use the side not under construction. Sidewalk closed signs are to be used in addition to the barricades. Traffic control is considered included.

STANDARDS:
- 701501-06
- 701502-06
- 701801-06
- 701901-05

DETAILS:
- TC-10 (Traffic Control and Protection for Side Roads, Intersections and Driveways)

SPECIAL PROVISIONS:
- Work Zone Traffic Control
- Flaggers in Work Zones
- Maintenance of Roadway

The Contractor shall contact the City of Batavia at least 72 hours in advance of beginning work.

METHOD OF MEASUREMENT: This item of work shall include furnishing, installing, maintaining, replacing, relocating and removing all traffic control devices used for the purpose of regulating, warning or directing traffic during the construction or maintenance of this improvement. The Contractor shall ensure that all traffic control devices installed are operational, functional and effective 24 hours a day, including Sundays and Holidays.

The Contractor is expected to comply with the Standard Specifications, contract plans, these Special Provisions and directions from the Engineer concerning traffic control and protection. If the Contractor fails to comply with the Standard Specifications, contract plans, or these Special Provisions concerning traffic control, the Engineer shall execute such work as may be deemed necessary to correct deficiencies and the cost thereof shall be deducted from compensation due to the Contractor under the contract. Failure to comply with directions from the Engineer for corrections or changes to traffic control devices will result in charge of $200 per day.

BASIS OF PAYMENT: This work will be included in the price of the contract if needed, for all labor, equipment and materials required for completing the work.

SP-8 MAINTENANCE OF EXISTING UTILITIES

The CONTRACTOR shall be responsible for interference with or damage to any existing utilities, such as water mains, sewers, gas mains, cable, conduit, etc., and shall repair or replace same at his own expense and with the least possible delay. The CONTRACTOR shall give prior notification to the utility companies of his intention to begin work. He shall also call J.U.L.I.E. at 811 to mark the location of underground utilities (48 hours prior to commencing the work). The CONTRACTOR shall utilize a joint meet that includes the OWNER and the ENGINEER. The requirements to satisfy the conditions stated herein shall be considered as included in the contract bid prices and no extra compensation will be allowed.

SP-9 CONCRETE CURB REMOVAL

DESCRIPTION: This work shall be in accordance with Section 606 of the Standard Specifications. Curb removal will be at locations only as designated on the Plans or as directed by the Engineer.

METHOD OF MEASUREMENT: This work will be measured for payment in length and computed in feet.

SP-10 REMOVAL AND DISPOSAL OF UNSUITABLE ATERIAL

Add the following paragraph to Article 202.03 of the Standard Specifications:

This work shall include the removal and disposal of excavated material consisting of existing sub-grade below surfaces/pavements to be removed and replaced including curb and gutter, sidewalk, driveway pavement, base course, and pavement patching. The depth of excavation shall be based on the condition of the existing sub-grade as determined by the Engineer in order to provide adequate bases for the various proposed items of work.

SP-11 CONSTRUCTION LAYOUT

DESCRIPTION: This work shall consist of surveying local control points to establish horizontal and vertical control required for construction of the relief sewer related contract items of work. This work will include sewer pipe and structure placement. These stakes or markings must be maintained throughout construction. The survey foreman will be responsible for the review of stakes and marking with the Engineer prior to the final placement of any materials.

BASIS OF PAYMENT: This work will be measured and paid for at the contract unit price LUMP SUM as CONSTRUCTION LAYOUT, which price includes all labor, material and equipment necessary to survey control points, lines, establish stakes and marking, and the review of all such stakes and markings with the Engineer.

Layout required for concrete removal and replacement construction contract items will be provided by the Engineer.

SP-12 LANDSCAPING, SPECIAL

DESCRIPTION: This work shall be in accordance with section 201, 251, and 253 of the Standard Specifications. The work will include relocating the existing shrubs and clearing of brush within the landscaped area as shown on the Plans and as directed by the Engineer. The contractor shall carefully remove and replant the existing shrubs and place a 6” layer of wood chip mulch around the entire landscaped area. The entire perimeter border of the new landscaped area shall be re-established by tooled edging as directed by the Engineer.

BASIS OF PAYMENT: This work will be measured and paid for at the contract unit price LUMP SUM as LANDSCAPING, SPECIAL, which price includes all labor, material and equipment necessary to restore the landscaped area as required.

PART IV

Perpendicular Curb Ramps for Sidewalks (Std. 424001) ……. 1 – 2
Concrete Curb Type B and Comb. Curb and Gutter (Std. 606001) ……. 1 – 2
Urban Lane Closure, 2L, 2W, Undivided (Std.701501) ….……..1
Urban Lane Closure, 2L, 2W, With Bidirectional (Std.701502) ……. 1 - 2
Sidewalk, Corner, or Crosswalk Closure (Std.701801) ……. 1 - 2
Traffic Control Devices (Std.701901) …….. 1 - 3

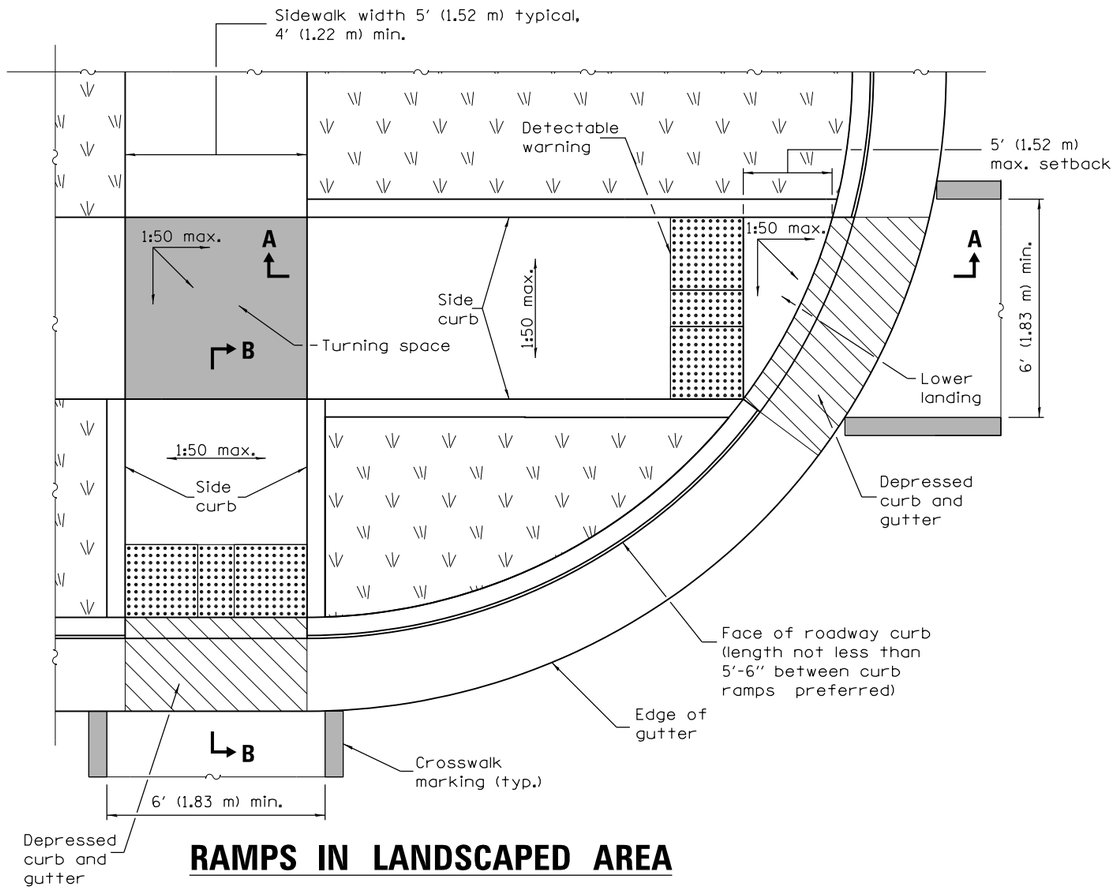

RAMPS IN LANDSCAPED AREA

SETBACK ≤ 5′

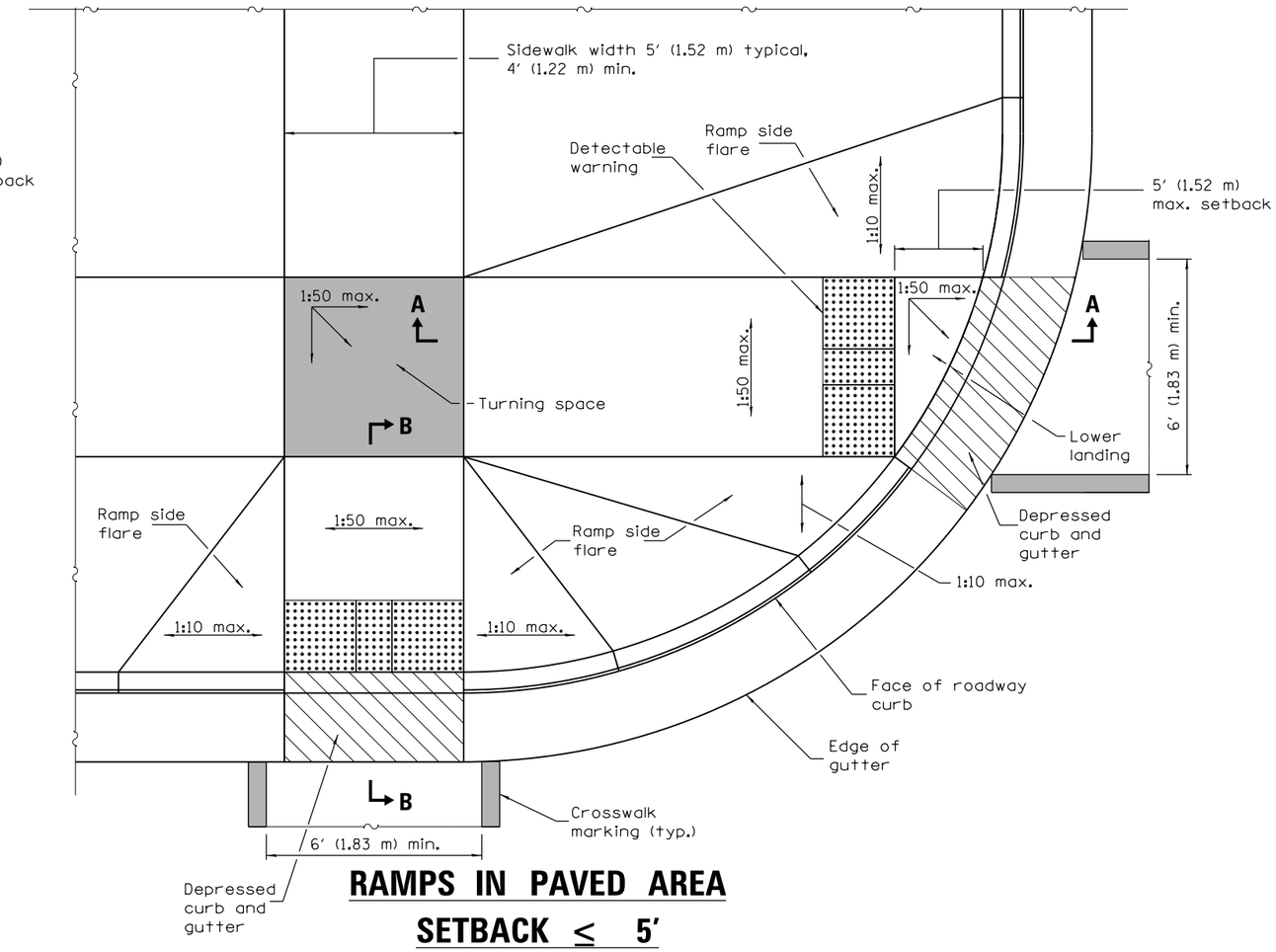

RAMPS IN PAVED AREA

SETBACK ≤ 5′

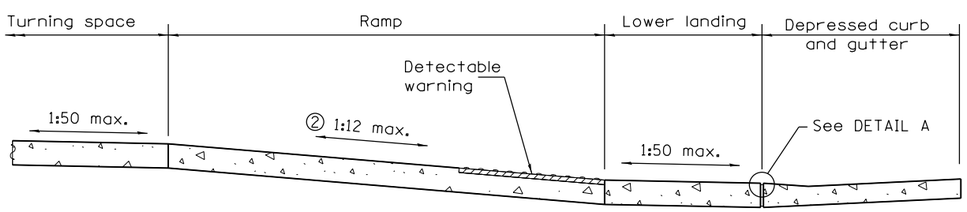

SECTION A–A

② The running slope of the curb ramp shall not require the ramp length to exceed 15′ (4.5 m).

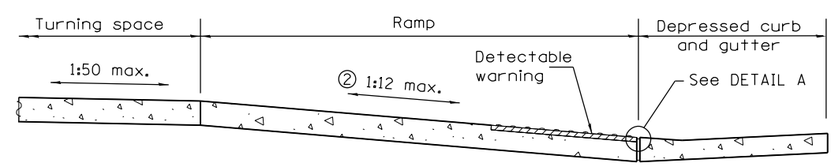

SECTION B–B

② The running slope of the curb ramp shall not require the ramp length to exceed 15′ (4.5 m).

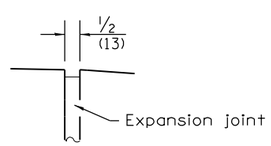

DETAIL A

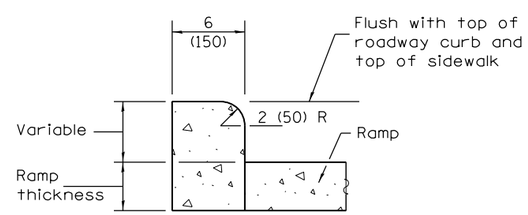

SIDE CURB DETAIL

See Sheet 2 for GENERAL NOTES.

DATE	REVISIONS
1-1-15	① not appl. to int. sidewalks.
	Rev. gen. notes. Ch'd Upper
	landing to Turning space.
1-1-13	Widened crosswalk markings
	to 6′ (1.83 m) min. inside
	dimension. Rev. Gen. Notes.

PERPENDICULAR CURB RAMPS FOR SIDEWALKS

(Sheet 1 of 2)

STANDARD 424001–08

Illinois Department of Transportation

PASSED January 1, 2015

Michael Brand
ENGINEER OF POLICY AND PROCEDURES

APPROVED January 1, 2015

ENGINEER OF DESIGN AND ENVIRONMENT

ISSUED 1-1-97

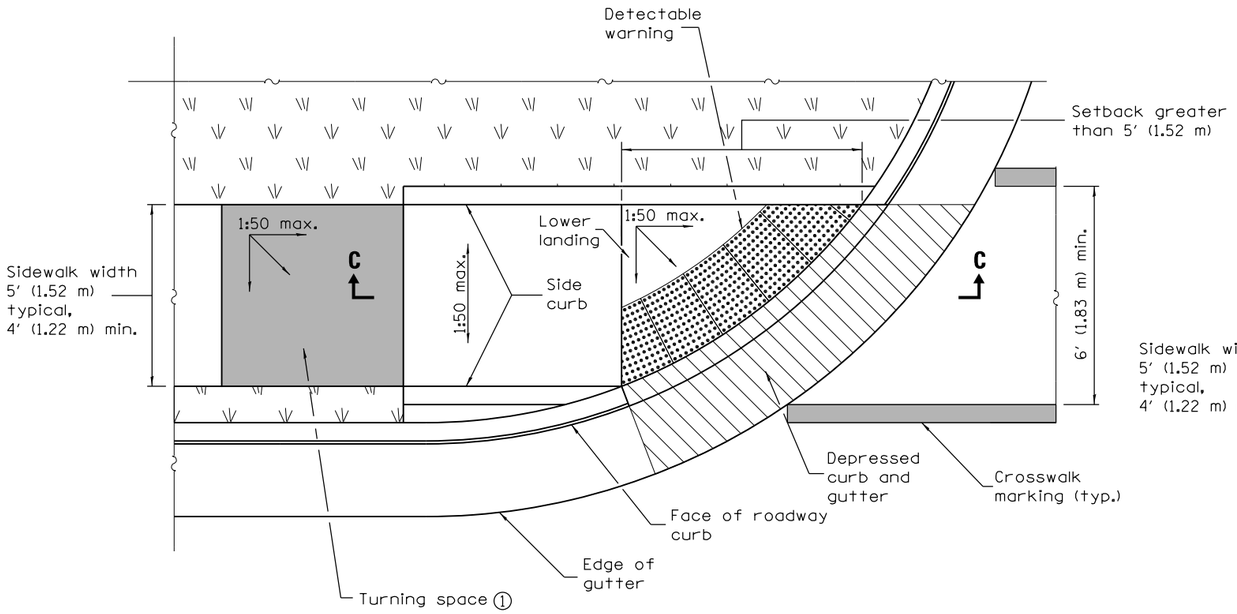

RAMP IN LANDSCAPED AREA
SETBACK > 5′

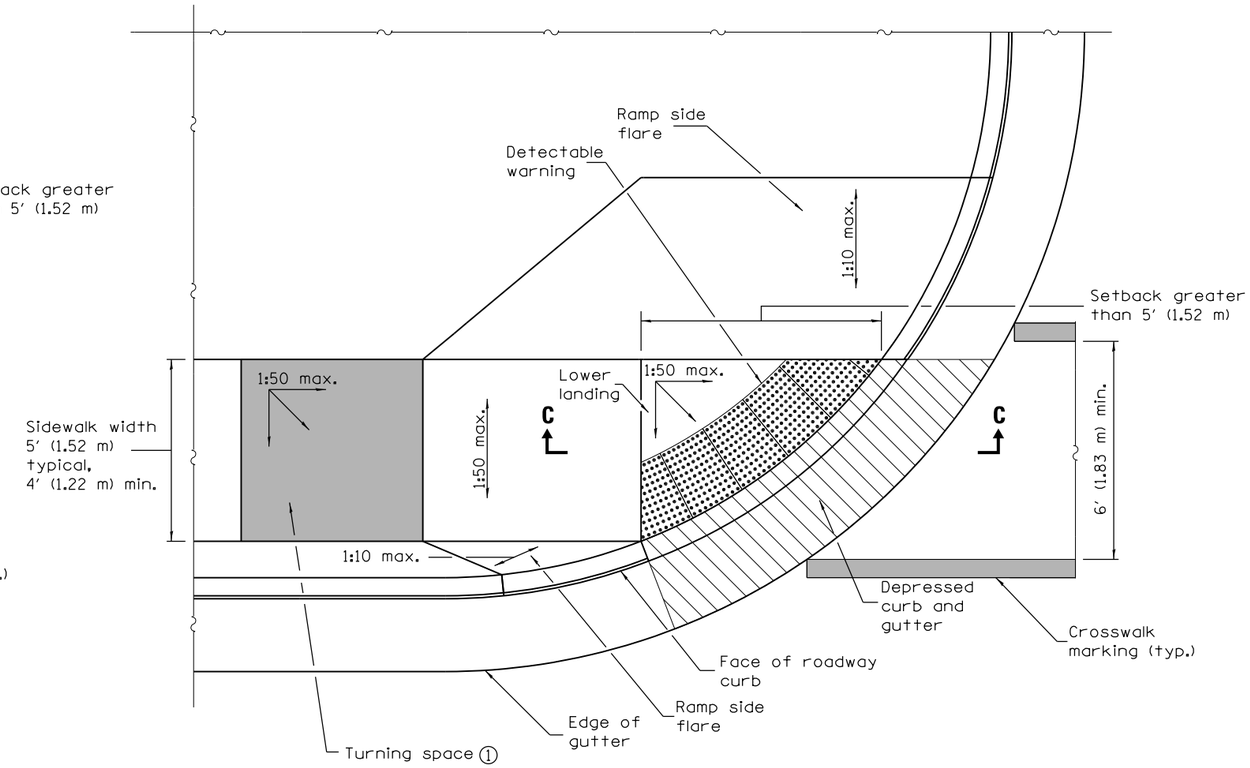

RAMP IN PAVED AREA
SETBACK > 5′

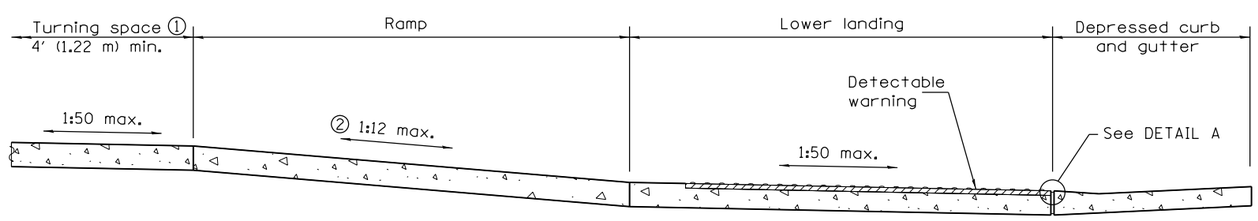

SECTION C–C

① Turning space not required for ramp slopes flatter than 1:20.

② The running slope of the curb ramp shall not require the ramp length to exceed 15′ (4.5 m).

GENERAL NOTES

All slope ratios are expressed as units of vertical displacement to units of horizontal displacement (V:H).

Where the turning space is constrained on a side opposite a ramp, the minimum length of the turning space in the direction of the ramp-run shall be 5′ (1.52 m).

Where 1:50 maximum slope is shown, 1:64 is preferred.

See Standard 606001 for details of depressed curb adjacent to curb ramp.

All dimensions are in inches (millimeters) unless otherwise shown.

Illinois Department of Transportation

PASSED January 1, 2015
Michael Brand
ENGINEER OF POLICY AND PROCEDURES
APPROVED January 1, 2015
ENGINEER OF DESIGN AND ENVIRONMENT

ISSUED 1-1-97

PERPENDICULAR CURB RAMPS FOR SIDEWALKS

(Sheet 2 of 2)

STANDARD 424001–08

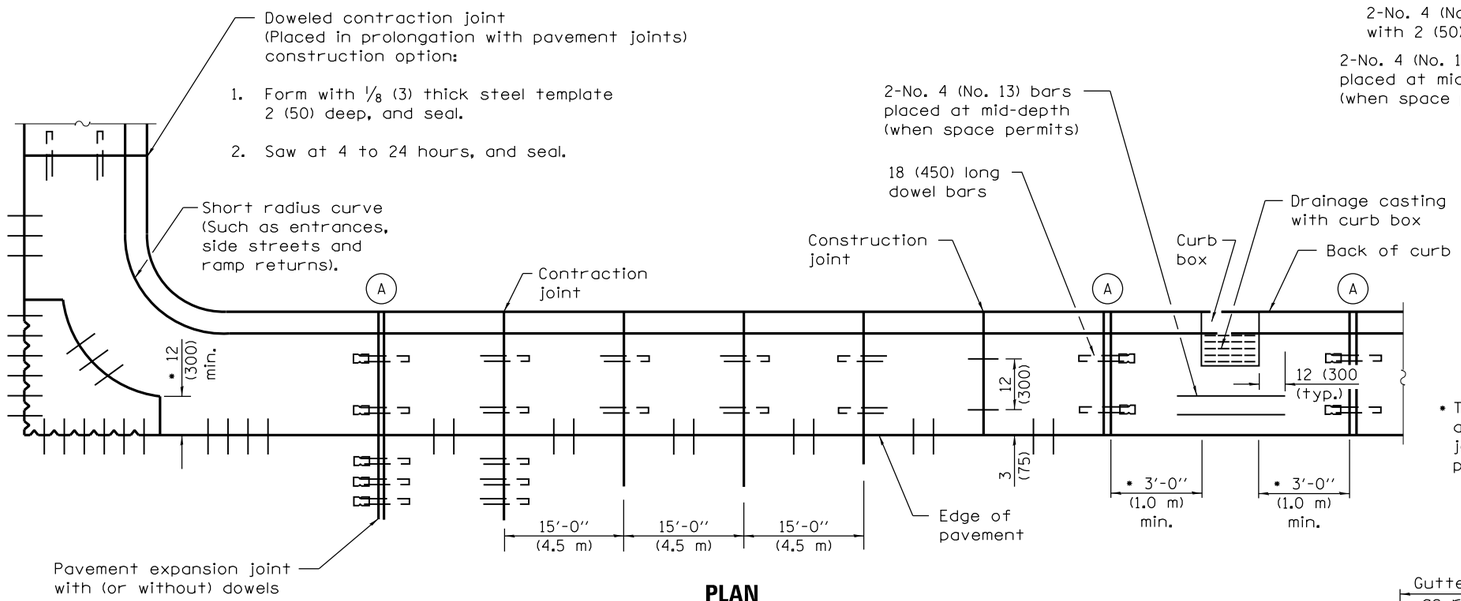

PLAN
ADJACENT TO PCC PAVEMENT OR PCC BASE COURSE

• This dimension shall be adjusted to align with joint on the adjacent pavement

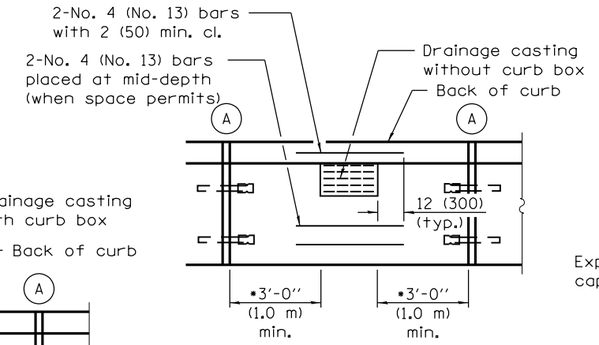

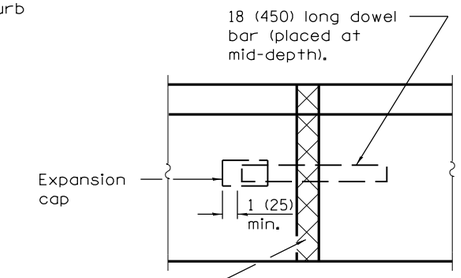

DETAIL (A)
EXPANSION JOINT

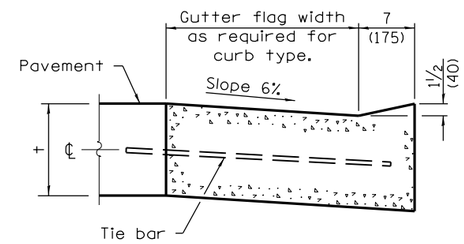

DEPRESSED CURB (TYPICAL)

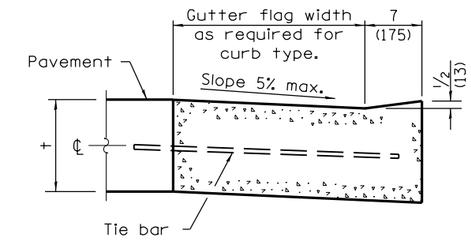

DEPRESSED CURB ADJACENT TO CURB RAMP ACCESSIBLE TO THE DISABLED

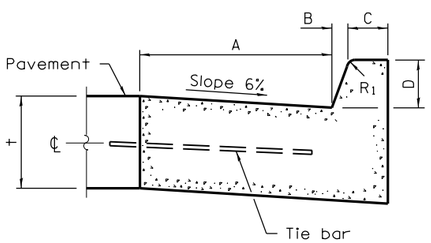

BARRIER CURB

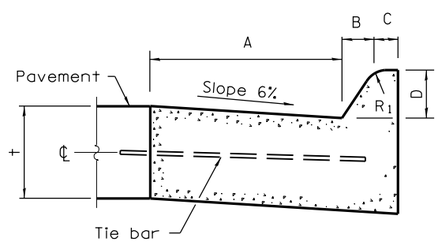

MOUNTABLE CURB

TABLE OF DIMENSIONS BARRIER CURB					
TYPE	A	B	C	D	R_1
B-6.06 * (B-15.15)	6 (150)	1 (25)	6 (150)	6 (150)	1 (25)
B-6.12 (B-15.3)	12 (300)	1 (25)	6 (150)	6 (150)	1 (25)
B-6.18 (B-15.45)	18 (450)	1 (25)	6 (150)	6 (150)	1 (25)
B-6.24 (B-15.60)	24 (600)	1 (25)	6 (150)	6 (150)	1 (25)
B-9.12 (B-22.30)	12 (300)	2 (50)	5 (125)	9 (225)	1 (25)
B-9.18 (B-22.45)	18 (450)	2 (50)	5 (125)	9 (225)	1 (25)
B-9.24 (B-22.60)	24 (600)	2 (50)	5 (125)	9 (225)	1 (25)

* For corner islands only.

TABLE OF DIMENSIONS MOUNTABLE CURB						
TYPE	A	B	C	D	R_1	R_2
M-2.06 (M-5.15)	6 (150)	2 (50)	4 (100)	2 (50)	3 (75)	2 (50)
M-2.12 (M-5.30)	12 (300)	2 (50)	4 (100)	2 (50)	3 (75)	2 (50)
M-4.06 (M-10.15)	6 (150)	4 (100)	3 (75)	4 (100)	3 (75)	NA
M-4.12 (M-10.30)	12 (300)	4 (100)	3 (75)	4 (100)	3 (75)	NA
M-4.18 (M-10.45)	18 (450)	4 (100)	3 (75)	4 (100)	3 (75)	NA
M-4.24 (M-10.60)	24 (600)	4 (100)	3 (75)	4 (100)	3 (75)	NA
M-6.06 (M-15.15)	6 (150)	6 (150)	2 (50)	6 (150)	2 (50)	NA
M-6.12 (M-15.30)	12 (300)	6 (150)	2 (50)	6 (150)	2 (50)	NA
M-6.18 (M-15.45)	18 (450)	6 (150)	2 (50)	6 (150)	2 (50)	NA
M-6.24 (M-15.60)	24 (600)	6 (150)	2 (50)	6 (150)	2 (50)	NA

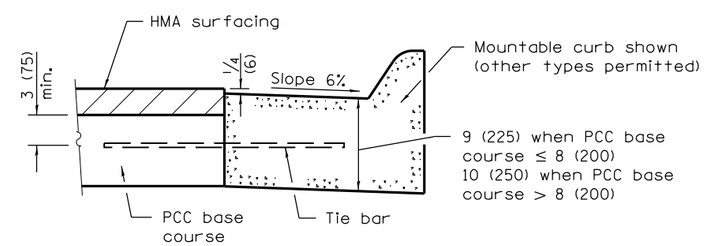

ADJACENT TO PCC BASE COURSE WITH HMA SURFACING

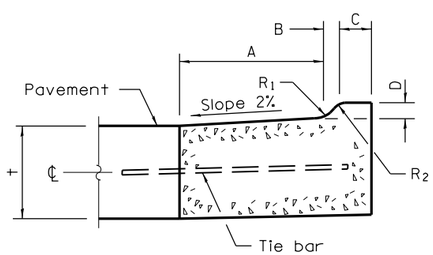

M–2.06 (M–5.15) and M–2.12 (M–5.30)

GENERAL NOTES

The bottom slope of combination curb and gutter constructed adjacent to pcc pavement shall be the same slope as the subbase or 6% when subbase is omitted.

t = Thickness of pavement.

Longitudinal joint tie bars shall be No. 6 (No. 19) at 24 (600) centers in accordance with details for longitudinal construction joint shown on Standard 420001.

A minimum clearance of 2 (50) between the end of the tie bar and the back of the curb shall be maintained.

The dowel bars shown in contraction joints will only be required for monolithic construction.

See Standard 606301 for details of corner islands.

All dimensions are in inches (millimeters) unless otherwise shown.

Illinois Department of Transportation

PASSED January 1, 2015
Michael Brand
ENGINEER OF POLICY AND PROCEDURES
APPROVED January 1, 2015
ENGINEER OF DESIGN AND ENVIRONMENT

ISSUED 1-1-97

DATE	REVISIONS
1-1-15	Added B-6.06 (B-15.15) barrier
	curb and gutter to table
	(corner islands only).
1-1-13	Added general note
	regarding requirement
	for dowel bars.

CONCRETE CURB TYPE B AND COMBINATION CONCRETE CURB AND GUTTER

(Sheet 1 of 2)

STANDARD 606001–06

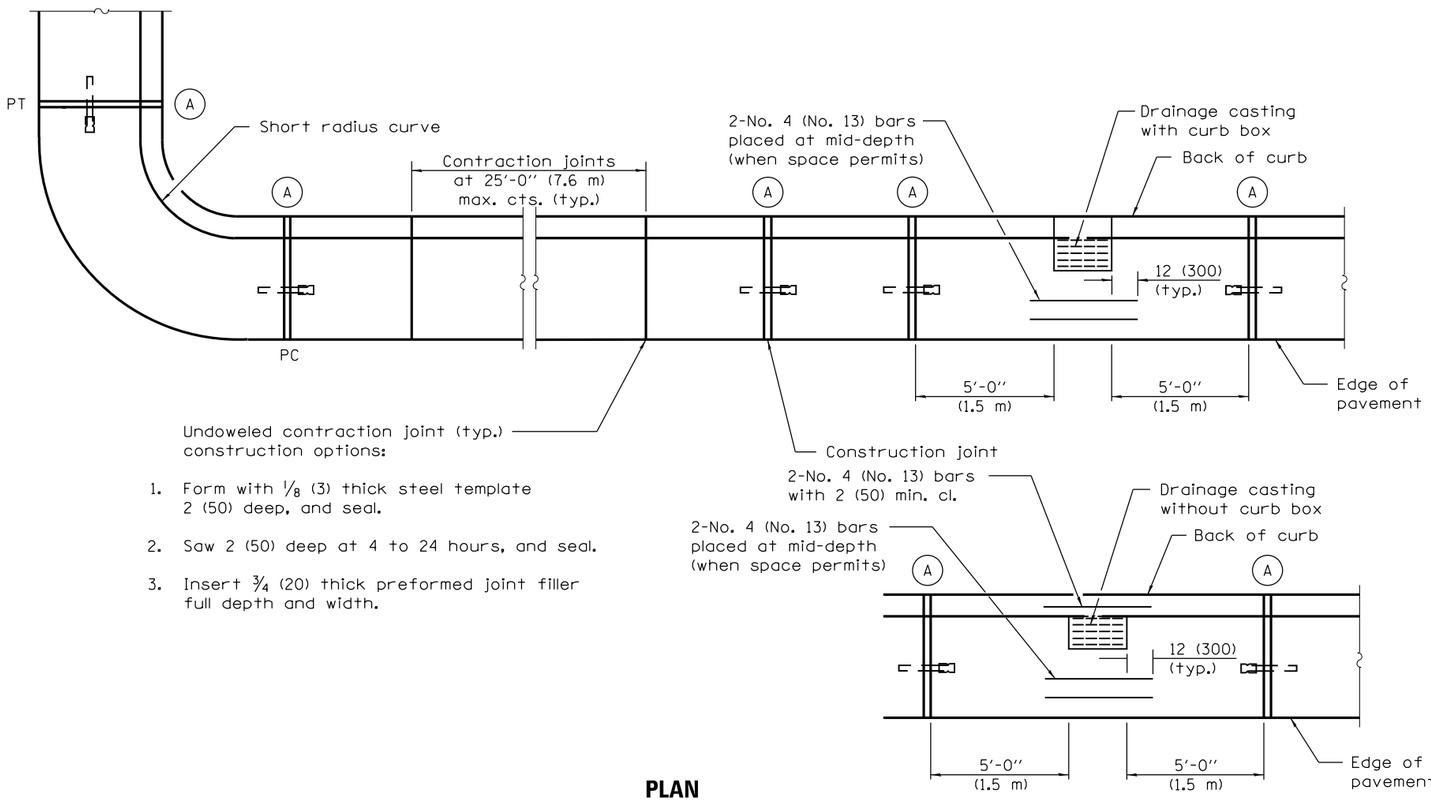

PLAN

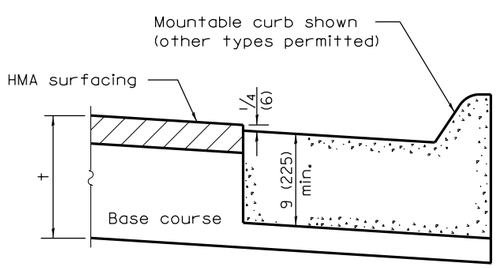

ON DISTURBED SUBGRADE

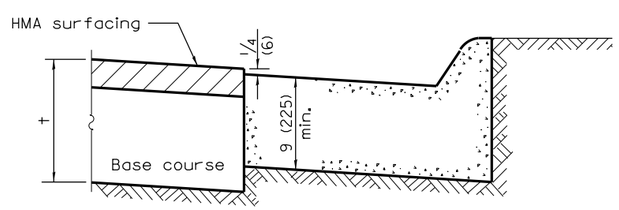

ON UNDISTURBED SUBGRADE

ADJACENT TO FLEXIBLE PAVEMENT

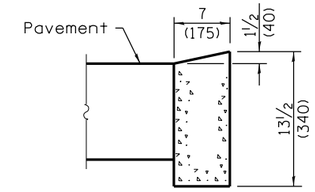

DEPRESSED CURB

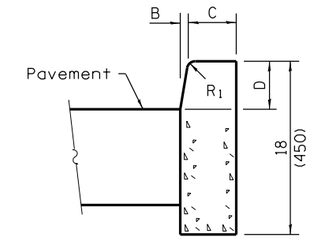

BARRIER CURB

ADJACENT TO FLEXIBLE PAVEMENT

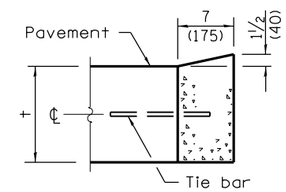

DEPRESSED CURB

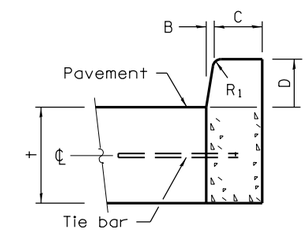

BARRIER CURB

ADJACENT TO PCC PAVEMENT OR PCC BASE COURSE

CONCRETE CURB TYPE B

Illinois Department of Transportation

PASSED January 1, 2015

Michael Brand

ENGINEER OF POLICY AND PROCEDURES

APPROVED January 1, 2015

ENGINEER OF DESIGN AND ENVIRONMENT

ISSUED 1-1-97

CONCRETE CURB TYPE B AND COMBINATION CONCRETE CURB AND GUTTER

(Sheet 2 of 2)

STANDARD 606001–06

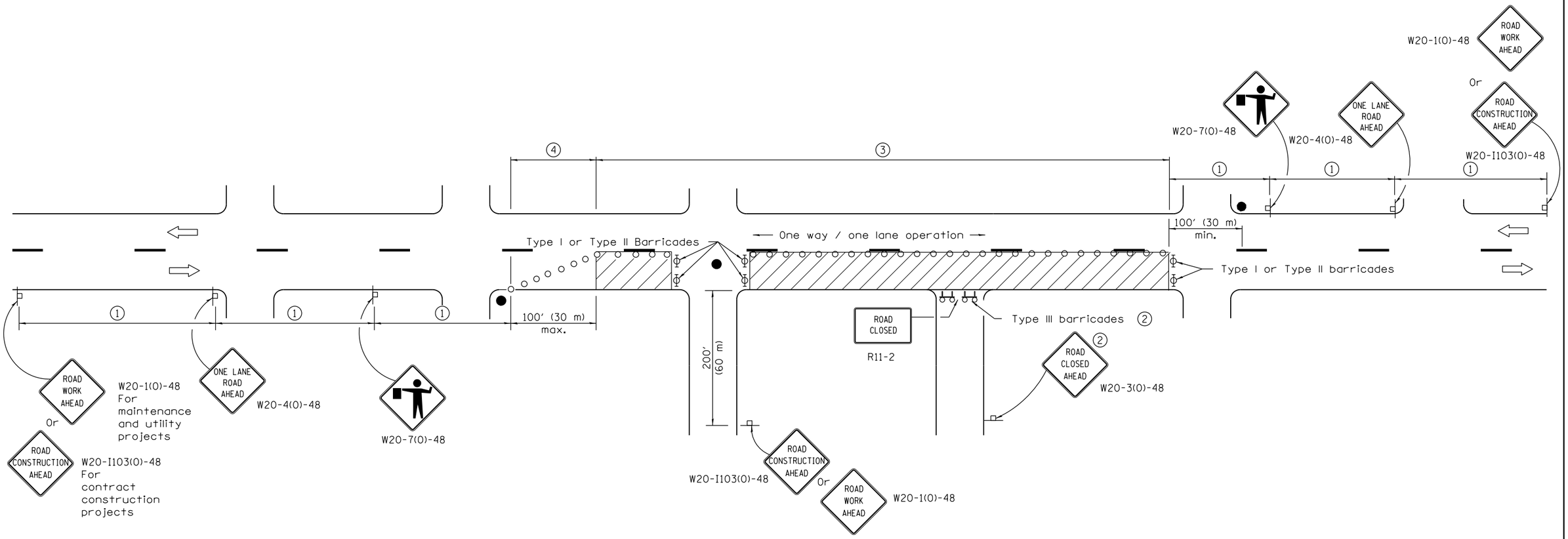

SIGN SPACING	
Posted Speed	Sign Spacing
55	500′ (150 m)
50-45	350′ (100 m)
<45	200′ (60 m)

SYMBOLS

- Work area
- Cone, drum or barricade (not required for moving operations)
- Sign on portable or permanent support
- Flagger with traffic control sign
- Barricade or drum with flashing light
- Type III barricade with flashing lights

1. Refer to SIGN SPACING TABLE for distances.
2. For approved sideroad closures.
3. Cones at 25′ (8 m) centers for 250′ (75 m). Additional cones may be placed at 50′ (15 m) centers. When drums or Type I or Type II barricades are used. the interval between devices may be doubled.
4. Cones, drums or barricades at 20′ (6 m) centers.

GENERAL NOTES

This Standard is used where at any time, day or night, any vehicle, equipment, workers or their activities
encroach on the pavement requiring the closure of one traffic lane in an urban area.

All dimensions are in inches (millimeters) unless otherwise shown.

Illinois Department of Transportation

APPROVED January 1, 2011
ENGINEER OF SAFETY ENGINEERING
APPROVED January 1, 2011
ENGINEER OF DESIGN AND ENVIRONMENT

ISSUED 1-1-97

DATE	REVISIONS
1-1-11	Revised flagger sign.
1-1-09	Switched units to
	English (metric).
	Corrected sign No.'s.

URBAN LANE CLOSURE, 2L, 2W, UNDIVIDED

STANDARD 701501–06

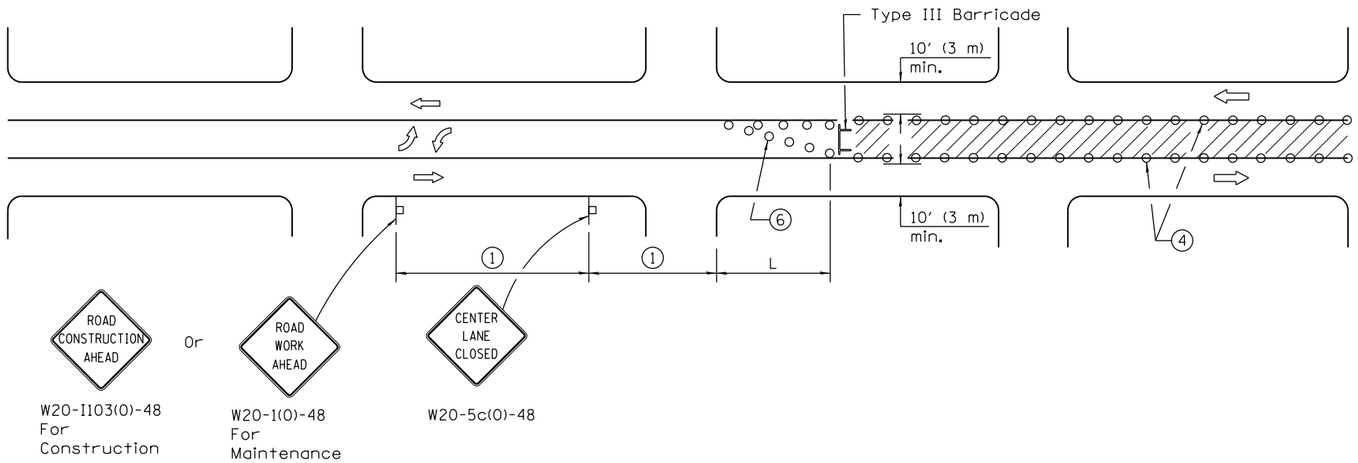

CASE I

(Signs required for both directions)

SIGN SPACING	
Posted Speed	Sign Spacing
55	500′ (150 m)
50-45	350′ (100 m)
<45	200′ (60 m)

SYMBOLS

- Work area
- Barricade or drum with flashing light
- Flagger with traffic control sign
- Cone, drum or barricade (Cones for daytime use only)
- Sign on portable or permanent support

1. Refer to SIGN SPACING TABLE for distances.
2. Required for speeds > 40 mph (70 km/h).
3. Required if work exceeds 500′ (164 m) or 1 block.
4. Cones at 25′ (8 m) centers for 250′ (75 m). Additional cones may be placed at 15 m (50′) centers. When drums or type I or II barricades are used, the interval between devices may be doubled.
5. For approved sideroad closures.
6. Cones, drums or barricades at 20′ (6 m) centers in taper.
7. Use flagger sign only when flagger is present.

GENERAL NOTES

This Standard is used to close one lane of an urban, two lane, two way roadway with a bidirectional turn lane.

Case I applies when no workers are present. When workers are present, two lanes shall be closed and traffic control shall be according to Standard 701501.

Calculate L as follows:

SPEED LIMIT	FORMULAS English	FORMULAS (Metric)
40 mph (70 km/h) or less:	$L = \frac{WS^2}{60}$	$L = \frac{WS^2}{150}$
45 mph (80 km/h) or greater:	L=(W)(S)	L=0.65(W)(S)

W = Width of offset in feet (meters).

S = Normal posted speed mph (km/h).

All dimensions are in inches (millimeters) unless otherwise shown.

Illinois Department of Transportation

APPROVED January 1, 2014
ENGINEER OF SAFETY ENGINEERING
APPROVED January 1, 2014
ENGINEER OF DESIGN AND ENVIRONMENT

ISSUED 1-1-01

DATE	REVISIONS
1-1-14	Omitted original note 4.
	Rev. workers sign no. to
	agree with current MUTCD.
1-1-13	Omitted text 'WORKERS'
	sign.

URBAN LANE CLOSURE, 2L, 2W, WITH BIDIRECTIONAL LEFT TURN LANE

(Sheet 1 of 2)

STANDARD 701502–06

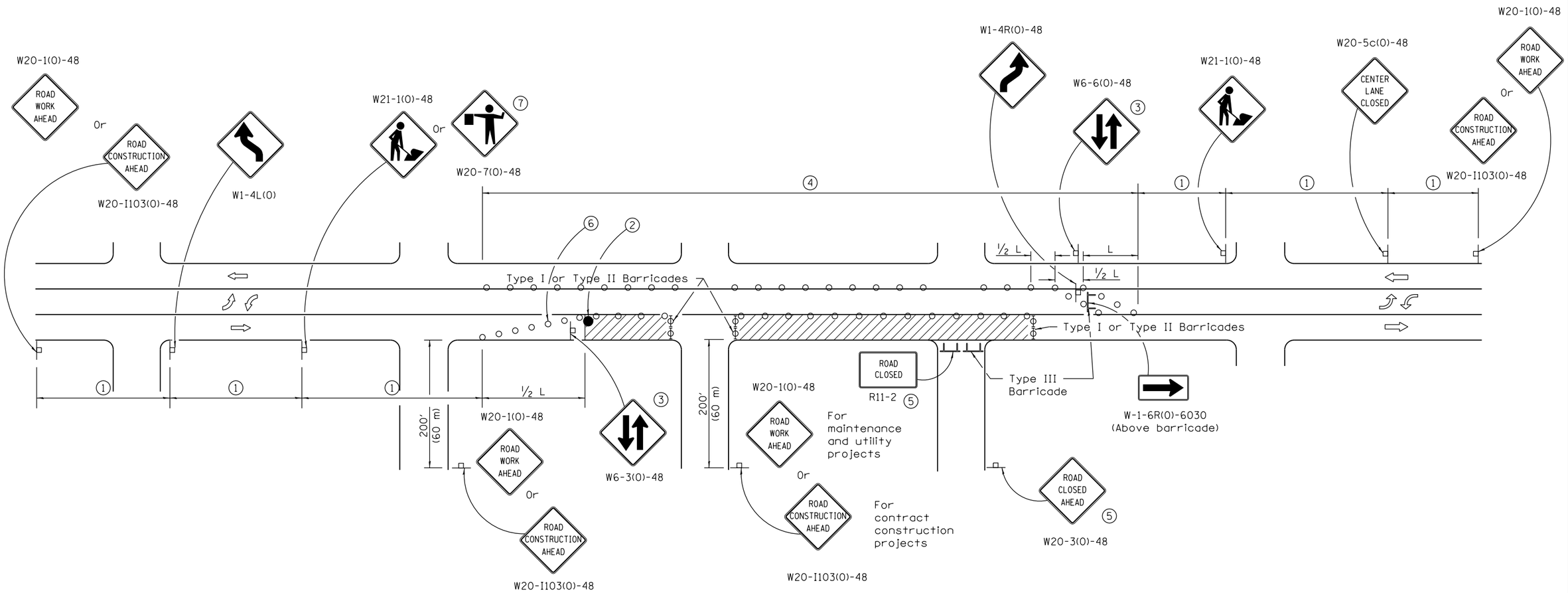

CASE II

Illinois Department of Transportation

APPROVED January 1, 2014
ENGINEER OF SAFETY ENGINEERING

APPROVED January 1, 2014
ENGINEER OF DESIGN AND ENVIRONMENT

ISSUED 1-1-10

URBAN LANE CLOSURE, 2L, 2W, WITH BIDIRECTIONAL LEFT TURN LANE

(Sheet 2 of 2)

STANDARD 701502–06

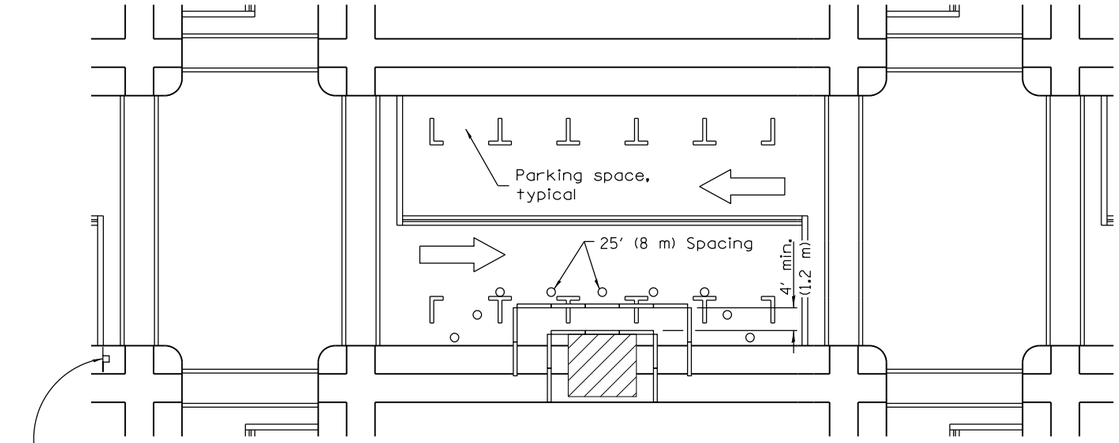

① Omit whenever duplicated by road work traffic control.

① ROAD CONSTRUCTION AHEAD — W20-I103(0)-48 for contract construction projects

Or

① ROAD WORK AHEAD — W20-1(0)-48 for maintenance and utility projects

SIDEWALK DIVERSION

SYMBOLS

- Work area
- Sign on portable or permanent support
- Barricade or drum
- Cone, drum or barricade
- Type III barricade
- Detectable pedestrian channelizing barricade

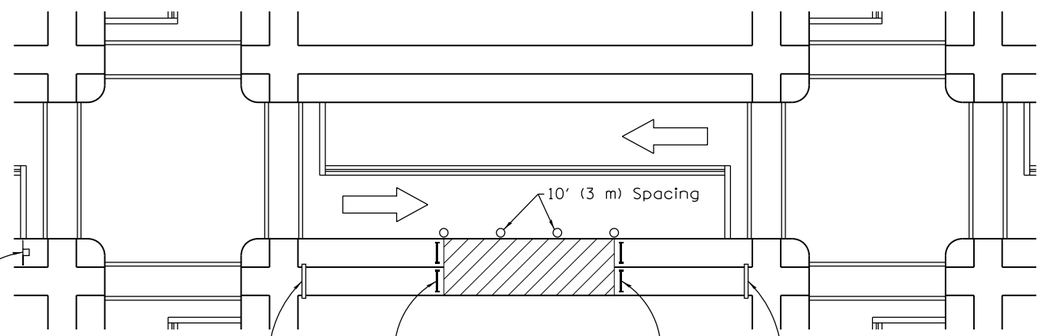

① ROAD CONSTRUCTION AHEAD — W20-I103(0)-48 for contract construction projects

Or

① ROAD WORK AHEAD — W20-1(0)-48 for maintenance and utility projects

SIDEWALK CLOSED — R11-I101-2418

SIDEWALK CLOSED / USE OTHER SIDE — R11-I102-2430

SIDEWALK CLOSED / USE OTHER SIDE — R11-I102-2430

SIDEWALK CLOSURE

GENERAL NOTES

This Standard is used where, at any time, pedestrian traffic must be rerouted due to work being performed.

This Standard must be used in conjunction with other Traffic Control & Protection Standards when roadway traffic is affected.

Temporary facilities shall be detectable and accessible.

The temporary pedestrian facilities shall be provided on the same side of the closed facilities whenever possible.

The SIDEWALK CLOSED / USE OTHER SIDE sign shall be placed at the nearest crosswalk or intersection to each end of the closure. Where the closure occurs at a corner, the signs shall be erected on the corners across the street from the closure. The SIDEWALK CLOSED signs shall be used at the ends of the actual closures.

Type III barricades and R11-2-4830 signs shall be positioned as shown in "ROAD CLOSED TO ALL TRAFFIC" detail on Standard 701901.

All dimensions are in inches (millimeters) unless otherwise shown.

DATE	REVISIONS
4-1-16	Omitted orange safety fence
	from standard as this is
	covered in the std. spec.
1-1-12	Added SIDEWALK DIVERSION.
	Modified appearance of
	plan views. Renamed Std.

Illinois Department of Transportation

APPROVED April 1, 2016
ENGINEER OF SAFETY ENGINEERING

APPROVED April 1, 2016
ENGINEER OF DESIGN AND ENVIRONMENT

ISSUED 1-1-97

SIDEWALK, CORNER OR CROSSWALK CLOSURE

(Sheet 1 of 2)

STANDARD 701801-06

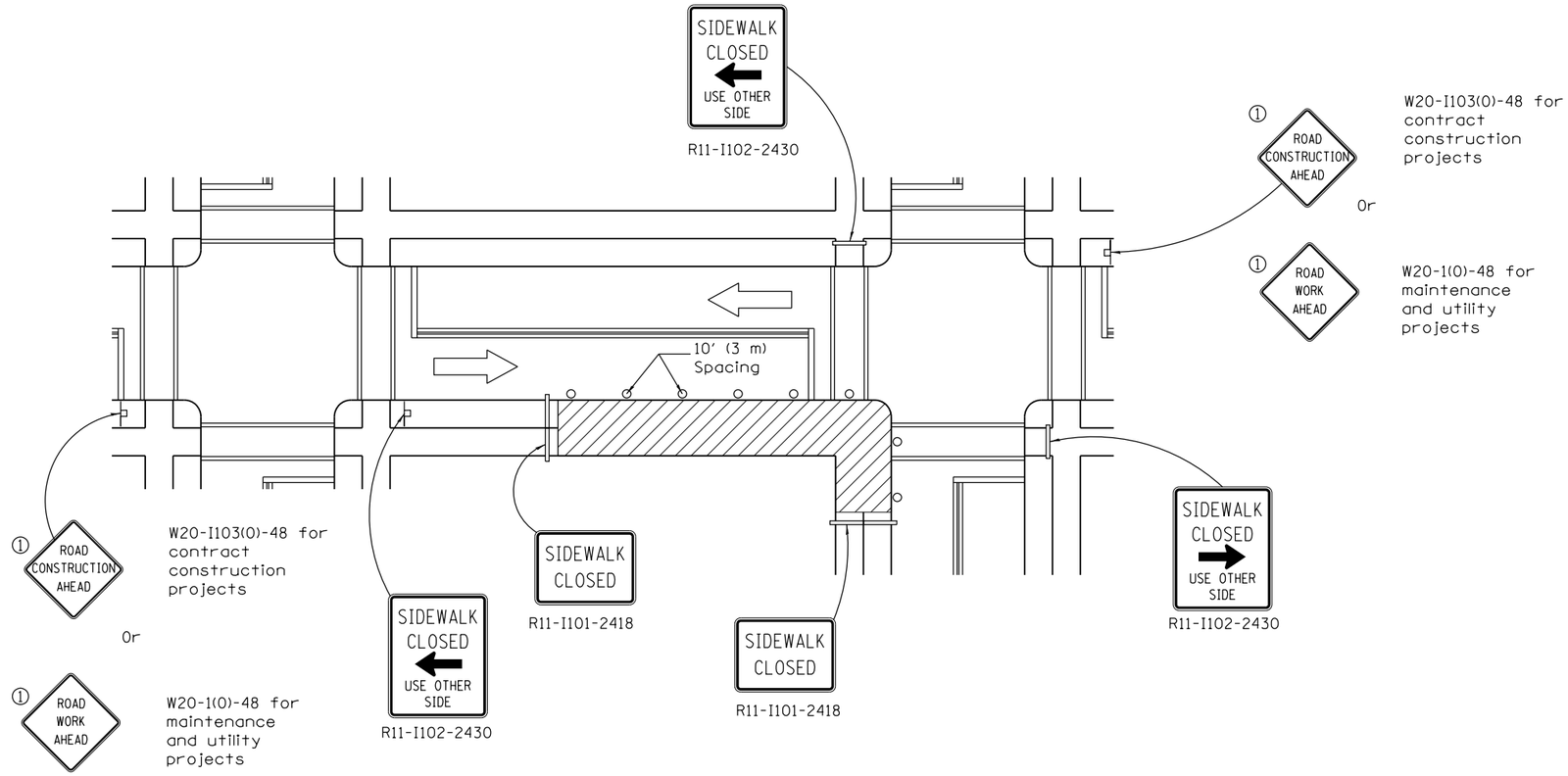

CORNER CLOSURE

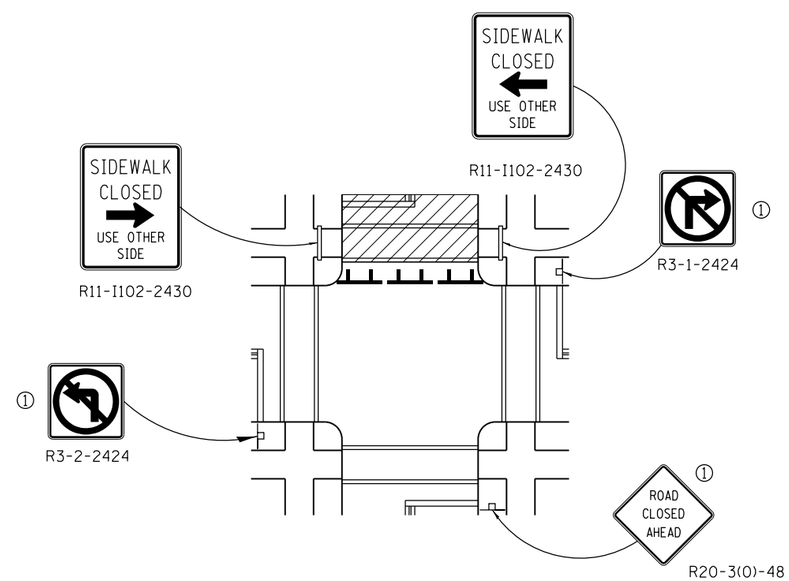

CROSSWALK CLOSURE

Illinois Department of Transportation

APPROVED April 1, 2016
ENGINEER OF SAFETY ENGINEERING
APPROVED April 1, 2016
ENGINEER OF DESIGN AND EVIRONMENT

ISSUED 1-1-97

SIDEWALK, CORNER OR CROSSWALK CLOSURE

(Sheet 2 of 2)

STANDARD 701801–06

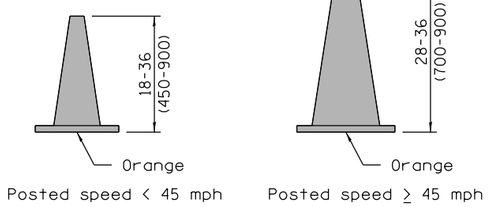

CONE FOR DAYTIME

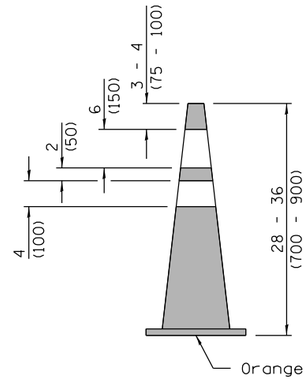

REFLECTORIZED CONE FOR NIGHTTIME

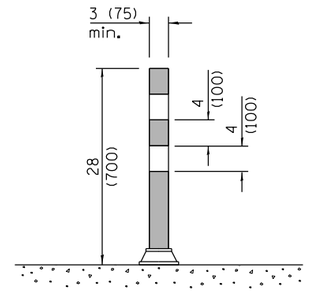

FLEXIBLE DELINEATOR

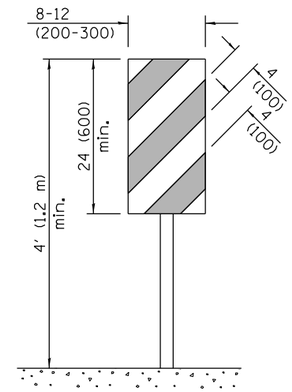

VERTICAL PANEL
POST MOUNTED

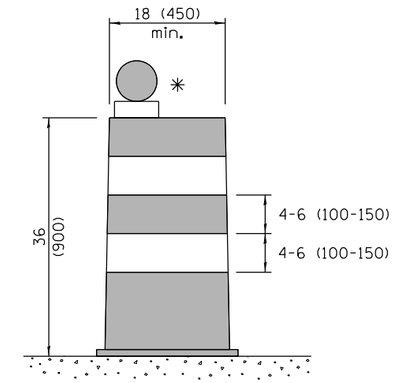

DRUM

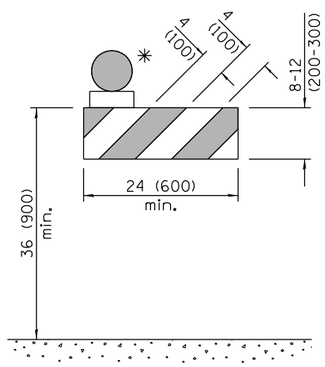

TYPE I BARRICADE

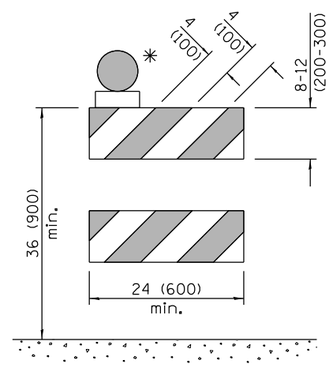

TYPE II BARRICADE

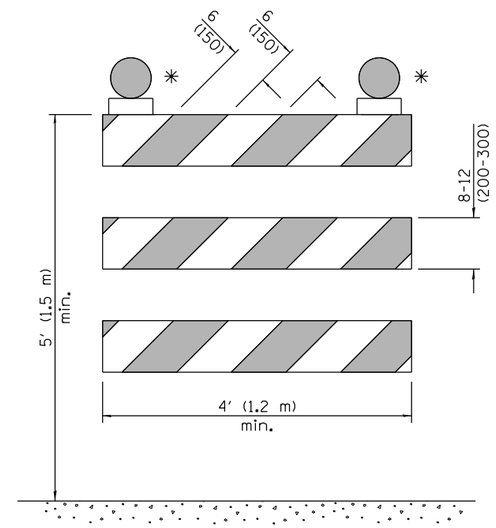

TYPE III BARRICADE

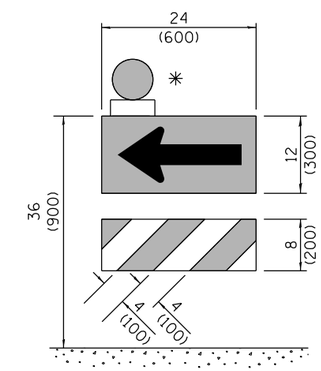

DIRECTION INDICATOR BARRICADE

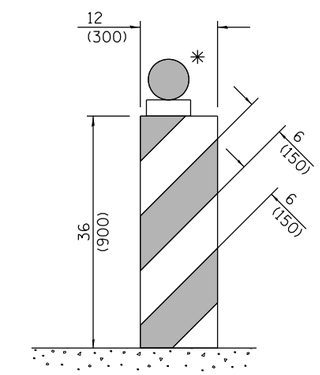

VERTICAL BARRICADE

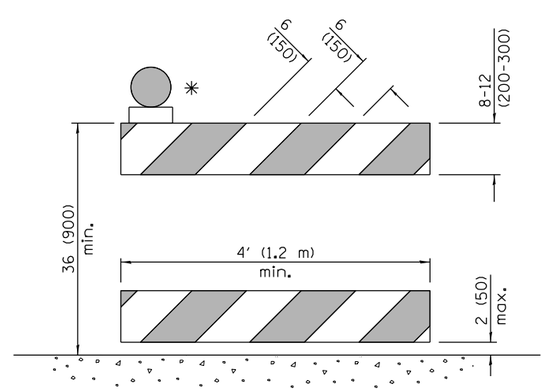

DETECTABLE PEDESTRIAN CHANNELIZING BARRICADE

✳ Warning lights (if required)

GENERAL NOTES

All heights shown shall be measured above the pavement surface.

All dimensions are in inches (millimeters) unless otherwise shown.

DATE	REVISIONS
4-1-16	Add dim's to barricades. Rev.
	note for post mnt. signs.
	Rev. cone dtls. Add W12-I103.
1-1-15	Revised two sign numbers on
	sheet 2. Added note reg.
	PHOTO ENFORCED plaque.

TRAFFIC CONTROL DEVICES

(Sheet 1 of 3)

STANDARD 701901-05

Illinois Department of Transportation

APPROVED April 1, 2016
ENGINEER OF OPERATIONS

APPROVED April 1, 2016
ENGINEER OF DESIGN AND ENVIRONMENT

ISSUED 1-1-97

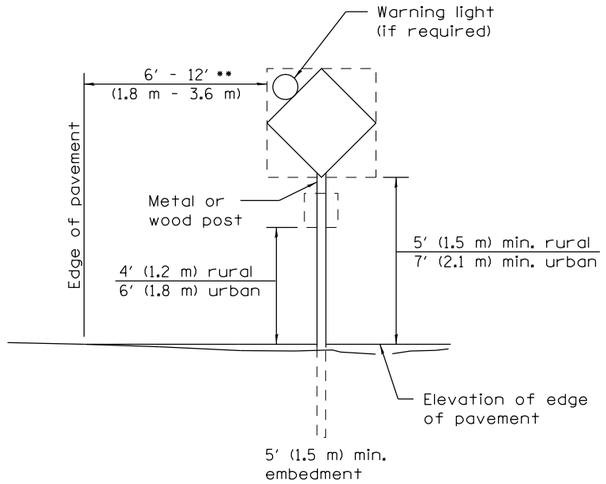

POST MOUNTED SIGNS

•• When curb or paved shoulder are present this dimension shall be 24 (600) to the face of curb or 6′ (1.8 m) to the outside edge of the paved shoulder.

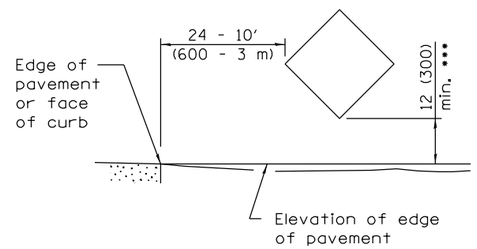

SIGNS ON TEMPORARY SUPPORTS

••• When work operations exceed four days, this dimension shall be 5′ (1.5 m) min. If located behind other devices, the height shall be sufficient to be seen completely above the devices.

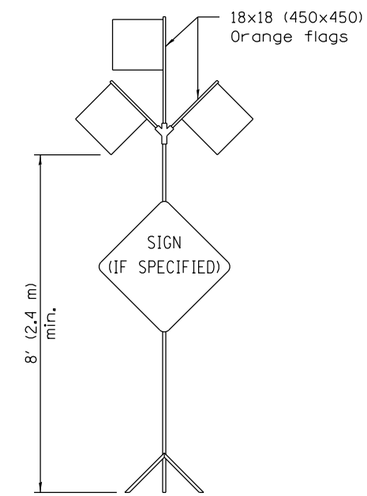

HIGH LEVEL WARNING DEVICE

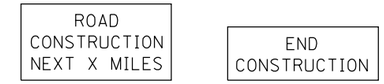

G20-I104(0)-6036 G20-I105(0)-6024

This signing is required for all projects 2 miles (3200 m) or more in length.

ROAD CONSTRUCTION NEXT X MILES sign shall be placed 500′ (150 m) in advance of project limits.

END CONSTRUCTION sign shall be erected at the end of the job unless another job is within 2 miles (3200 m).

Dual sign displays shall be utilized on multi-lane highways.

WORK LIMIT SIGNING

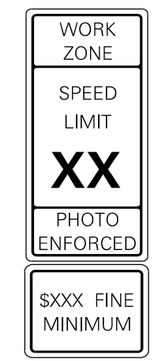

W21-I115(0)-3618

R2-1-3648

R10-I108p-3618 ••••

R2-I106p-3618

Sign assembly as shown on Standards or as allowed by District Operations.

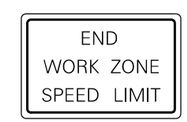

G20-I103(0)-6036

This sign shall be used when the above sign assembly is used.

HIGHWAY CONSTRUCTION SPEED ZONE SIGNS

•••• R10-I108p shall only be used along roadways under the juristiction of the State.

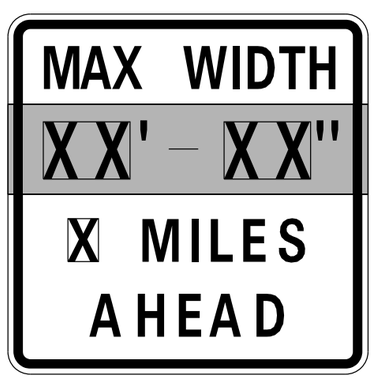

W12-I103-4848

WIDTH RESTRICTION SIGN

XX′-XX″ width and X miles are variable.

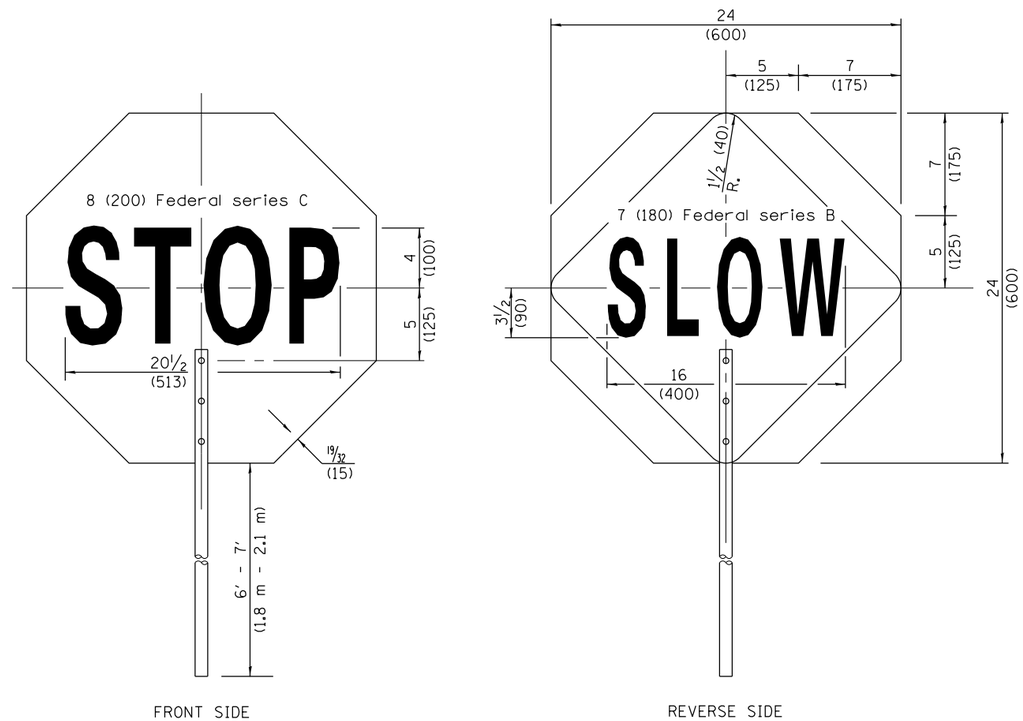

FLAGGER TRAFFIC CONTROL SIGN

Illinois Department of Transportation

APPROVED April 1, 2016
ENGINEER OF OPERATIONS

APPROVED April 1, 2016
ENGINEER OF DESIGN AND ENVIRONMENT

ISSUED 1-1-97

TRAFFIC CONTROL DEVICES

(Sheet 2 of 3)

STANDARD 701901–05

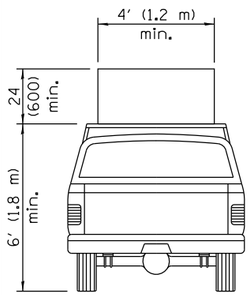

TYPE A
ROOF
MOUNTED

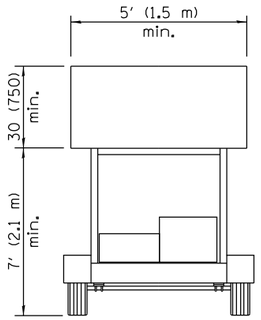

TYPE B
ROOF OR TRAILER
MOUNTED

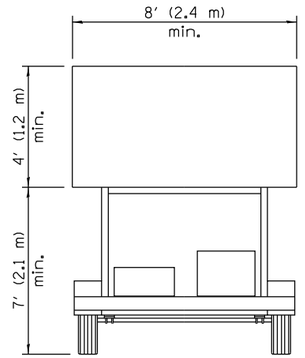

TYPE C
TRAILER
MOUNTED

ARROW BOARDS

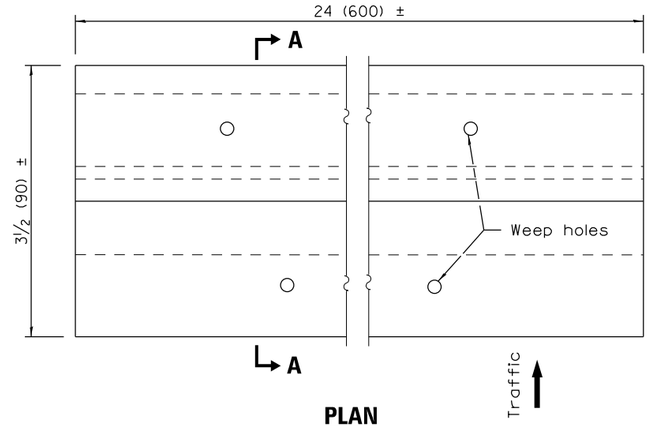

PLAN

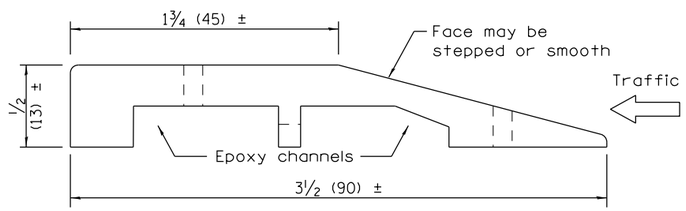

SECTION A–A

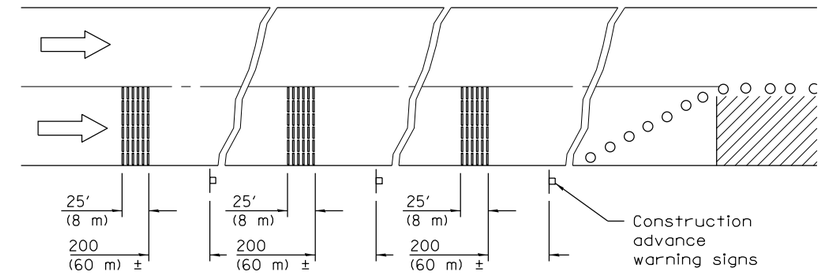

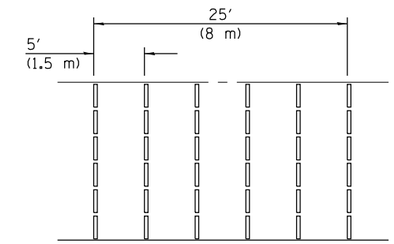

TYPICAL INSTALLATION

TEMPORARY RUMBLE STRIPS

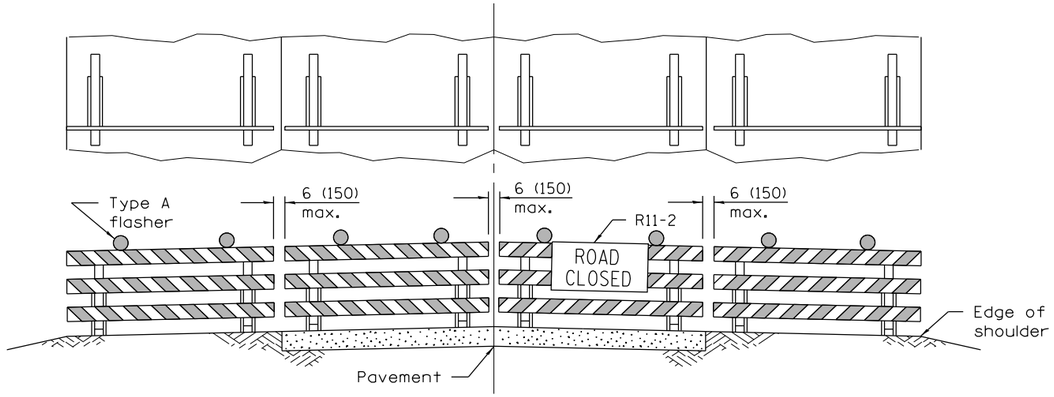

ROAD CLOSED TO ALL TRAFFIC

Reflectorized striping may be omitted on the back side of the barricades. If a Type III barricade with an attached sign panel which meets NCHRP 350 is not available, the sign may be mounted on an NCHRP 350 temporary sign support directly in front of the barricade.

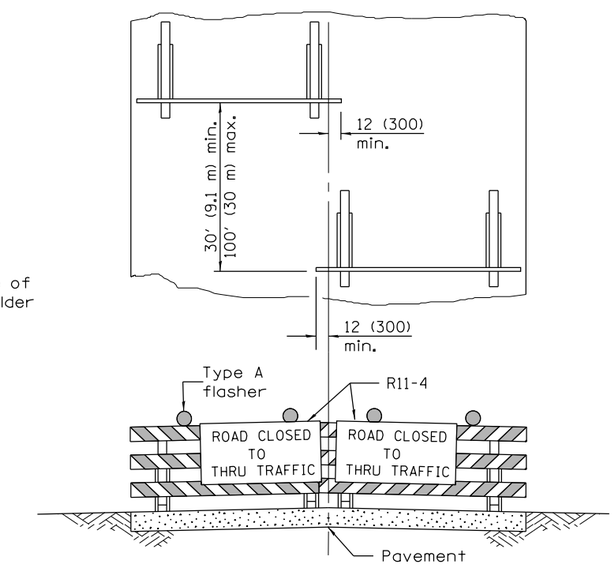

ROAD CLOSED TO THRU TRAFFIC

Reflectorized striping shall appear on both sides of the barricades. If a Type III barricade with an attached sign panel which meets NCHRP 350 is not available, the signs may be mounted on NCHRP 350 temporary sign supports directly in front of the barricade.

TYPICAL APPLICATIONS OF
TYPE III BARRICADES CLOSING A ROAD

Illinois Department of Transportation

APPROVED April 1, 2016
ENGINEER OF OPERATIONS
APPROVED April 1, 2016
ENGINEER OF DESIGN AND ENVIRONMENT

ISSUED 1-1-97

TRAFFIC CONTROL DEVICES

(Sheet 3 of 3)

STANDARD 701901–05

CITY OF BATAVIA

DATE: **April 21, 2016**
TO: **Committee of the Whole**
FROM: **Chris Aiston, Economic Development Consultant**
SUBJECT: **Executing Contract with Ehlers, Inc. for Consulting Services, to wit: Review Developer's Proposal and Request for Financial Assistance in the Redevelopment of the Batavia Plaza Shopping Center**

Background
In 2016, the City of Batavia retained the grocery store consultant, Market Planning and Analysis/SuperValu, to study the existing and trending economic and demographic data affecting the downtown grocery store market. This study, entitled "Grocery Store Feasibility Study for Batavia, Illinois", was completed in September, 2016 and, based on the information and opinions set forth in the study, was utilized by Batavia Enterprises, Inc. in persuading The Blue Goose, a St. Charles-based boutique grocer, to consider opening another store in BEI's downtown Batavia Plaza Shopping Center, specifically what was at the time the Walgreens in-line space.

Staff has been in regular contact with BEI representatives concerning a possible Blue Goose tenancy at the aforementioned former Walgreens space, with specific discussions surrounding estimated sources and uses of project funds in what will necessarily be a comprehensive remodel of the easterly north building façade and all storefronts along the subject property's east building façade. To date, BEI has indicated their construction plans further contemplate significant remodeling of the building's interior space. In discussing the potential redevelopment of the Batavia Plaza in more specifics, the company has also presented detailed pro forma analyses in support of a request for substantial financial assistance from the City. This is a big job with a big dollar figure attached; a figure staff feels strongly warrants the need for review by an outside, independent professional consulting firm with expertise in such matters. This type of review is often termed a "deal review" and the scope of which will be similar to that of the one completed by an outside consultant when the City was considering BEI's previous request for a TIF subsidy in the Walgreen's relocation/expansion project.

Consultant Proposals
The City requested proposals to complete the deal review from four Chicago area economic development consulting firms with recognized experience in the subject area of study. All said four firms submitted a proposal. Misters McGrath, Holm, Buening, and Aiston and Ms. Colby reviewed the proposals individually and ultimately ranked them by **direct relevant experience** and **price** as follows:

<u>Experience (Greatest to Least)</u>
1. SB Friedman & Co.
1. Ehlers, Inc. (tie)
3. Kane, McKenna and Assoc., Inc.
4. Hunden Strategic Partners

<u>Price (lowest to highest)</u>
1. Kane, McKenna and Assoc., Inc.
2. Ehlers, Inc.
3. Hunden Strategic Partners
4. SB Friedman & Co.

After a thorough review of each of the above listed company's proposals, the aforementioned city representatives are recommending the City retain Ehlers, Inc. to complete the deal review in the above-described analysis. Ehlers, Inc. submitted a proposal that includes:

a. completing a scope of work consistent with the project objectives and in a timely manner;

b. involving key, high ranking company personnel with substantial proven expertise in the subject area; and

c. delivering product for a total price not to exceed $12,500.00 (Twelve Thousand, Five Hundred Dollars and No Cents).

Budget Impact

The City's Fiscal Year 2016 Economic Development Professional Services budget has sufficient funds to fully fund the proposed study.

Staffing Impact

The City's regularly engaged economic development consultant has the capacity to serve as the principal point of contact and project manager for the City in undertaking and completing the subject study. Members of city staff, including those from City Administration, Finance, Community Development and Public Works departments will necessarily and from time to time assist the selected consultant in the completion of this (e.g., collecting necessary financial data, stating development policies and standards, and reviewing and providing comments on consultant's draft products). The above referenced departments are prepared and able to make staff and resources available toward this initiative.

Timeline

Staff's recommended consultant has indicated that upon execution of contract with the City, the firm expects to have the study completed for COW's consideration in four to six weeks, provided the developer can quickly meet requests for information, etc.

Recommendation

Staff recommends that the City Council's Committee of the Whole move to the City Council with a favorable recommendation the attached Resolution 16-45-R, "AUTHORIZING EXECUTION OF THE CONTRACT FOR ECONOMIC DEVELOPMENT CONSULTING SERVICES, TO WIT: REVIEWING DEVELOPER'S PROPOSAL AND REQUEST FOR FINANCIAL ASSISTANCE, WITH EHLERS, INC." in the amount of $12,500.00 (Twelve Thousand, Five Hundred Dollars and No Cents).

Attachments:
Resolution 16-45-R

CC: Mayor Schielke
Bill McGrath
Department Heads

CITY OF BATAVIA, ILLINOIS

RESOLUTION 16-45-R

AUTHORIZING EXECUTION OF THE CONTRACT FOR
ECONOMIC DEVELOPMENT CONSULTING SERVICES, TO WIT: REVIEWING DEVELOPER'S PROPOSAL AND REQUEST FOR FINANCIAL ASSISTANCE, WITH EHLERS, INC.

WHEREAS, the City of Batavia has identified the need for professional consulting services in the review of a developer's downtown redevelopment proposal and request for financial assistance (hereafter "review"); and

WHEREAS, the City of Batavia requested proposals and considered and ranked the submitted proposals; and

WHEREAS, Ehlers, Inc. has submitted a proposal and a determination has been made indicating that such proposal ranks above all other proposals submitted for the subject review; and

WHEREAS, the economic development consulting firm of Ehlers, Inc. has the appropriate expertise and experience necessary to complete the review; and

WHEREAS, the total cost of above described professional consulting services is in the amount not to exceed $12,500; and

NOW, THEREFORE, BE IT RESOLVED BY THE MAYOR AND CITY COUNCIL OF THE CITY OF BATAVIA AS FOLLOWS:

SECTION 1. That the Mayor and City Clerk are hereby authorized to execute the Contract with Ehlers, Inc. of Chicago, Illinois, for economic development professional consulting services in the amount not to exceed $12,500.00. The Contract is attached hereto as Exhibit "1".

CITY OF BATAVIA, ILLINOIS RESOLUTION 16-45-R

PRESENTED to and **PASSED** by the City Council of the City of Batavia, Illinois, this 2nd day of May, 2016.

APPROVED by me as Mayor of said City of Batavia, Illinois, this 2nd day of May, 2016.

_____

Jeffery D. Schielke, Mayor

Ward	Aldermen	Ayes	Nays	Absent	Abstain	Aldermen	Ayes	Nays	Absent	Abstain
1	O'Brien					Fischer				
2	Callahan					Wolff				
3	Hohmann					Chanzit				
4	Mueller					Stark				
5	Botterman					Thelin Atac				
6	Cerone					Russotto				
7	McFadden					Brown				
Mayor Schielke										

VOTE: Ayes Nays Absent Abstentions
Total holding office: Mayor and 14 aldermen

ATTEST:

_____

Heidi L. Wetzel, City Clerk

EHLERS
LEADERS IN PUBLIC FINANCE

April 4, 2016

Proposal for
Economic Development Consulting Services

City of Batavia, Illinois

Ehlers & Associates, Inc.
525 West Van Buren Street, Suite 450
Chicago, Illinois 60607-3823
Telephone: 312-638-5250
Fax: 312-638-5245
Toll Free: 800-552-1171

Proposal Contact:
Jennifer M. Tammen, Municipal Advisor/ Principal
Phone: 312-638-5263
Email: jtammen@ehlers-inc.com

Team Members:
Tricia Marino Ruffolo, Municipal Advisor
Maureen Barry, Senior Municipal Advisor/Vice President
Mindy Barrett, Project Analyst, Coordinator

The information provided in these materials does not create or imply any fiduciary relationship, and is being provided solely for the purpose of marketing our services to you as a prospective client of Ehlers & Associates, Inc.

Proposal for Economic Development Consulting Services
City of Batavia, Illinois

Table of Contents

Project Understanding and Approach 1
Additional Services 3
Project Pricing 3
Agreement 4

APPENDICES

Appendix A: Elements of a Project Review 5
Appendix B: About Ehlers 7
Appendix C: Project Team & Resumes 9
Appendix D: Related Project Experience 14
Appendix E: Additional TIF Services and Fees 20

April 4, 2016

Mr. Christopher C. Aiston, CEO/President
CC Aiston Consulting, Ltd.
Economic Development Consultant for the City of Batavia
c/o The City of Batavia
100 North Island Avenue
Batavia, IL 60510

Dear Mr. Aiston:

Pursuant to our recent discussions, thank you for inviting Ehlers & Associates, Inc. ("Ehlers") to submit this proposal for Economic Development consulting services to provide development proposal analysis and recommendations for the redevelopment of the Batavia Plaza shopping center located in the City of Batavia (the "City"). The City would like Ehlers to review the property owner's proposal and request for City financial assistance, evaluate and verify the property owner's assumptions, and confirm and/or recommend the appropriate level and structure of assistance. In addition, the City will need to understand the potential public revenue that could be generated from the project (property and sales taxes), recommend options to maximize the City's investment and provide key steps it can take to assist in revitalization.

Project Understanding and Approach

It is our understanding that the City is considering using tax increment financing ("TIF") and future sales taxes generating from the future redevelopment to support revitalization and both public and private investment to the Batavia Plaza, a community shopping center built in the 1960's, located at 138 W. Wilson Street (the "Property"). The Property is currently owned by Batavia Enterprises, Inc., whose subsidiary is a locally owned leasing and property management company serving the Fox Valley area (the "Property Owner"). The Property Owner has approached the City regarding the potential to redevelop the Property in partnership with the City. Redevelopment activities include the construction of a new façade for the Property, the inclusion of a 20,000 square foot Blue Goose grocery store as a new anchor tenant, and other related improvements (the "Project"). Based on our discussions with the City, the existing façade is about 25-30 years old and in need of reconstruction from both physical condition and market attraction perspectives.

To this end, the Property engaged the Laube Companies to prepare and submit to the City a financial gap analysis to demonstrate the Property Owner's need for City financial assistance in order to achieve required rates of return to make the Project financially viable. The analysis includes assumptions related to project costs, revenues, financing, and required rates of return.

The City is interested in evaluating the Property Owner's request, assumptions, and gap analysis to confirm the need for City financial assistance to make the Project financially viable. If it is determined that assistance is necessary, the City would like to understand the amount that is warranted and its options with respect to the structure and timing of the assistance.

Also as part of this analysis, the City will need to understand the amount of public revenues, primarily property and sales taxes that could be generated from the site to determine how much the project can support in addition to potential funding from other sources. Per our discussion, the project is not likely to generate significant incremental property taxes and TIF #3 does not have sufficient funds to contribute to the Project. The City is exploring the potential to port funds from TIF #1, which is adjacent to TIF #3, as a potential resource to support a financing gap, as may be appropriate.

Ehlers will work with the City staff to address these service areas. Given these considerations, we have organized our Scope of Services into the following Tasks:

Task 1: Developer Proforma Analysis. Municipalities are often approached by developers seeking funding to support a proposed project. One of the biggest challenges communities face when working with developers is determining the appropriate level of assistance. Ehlers Municipal Advisors regularly conduct Pro forma Analyses for communities pursuing redevelopment, helping them assess the appropriate level of need and developer assistance. This includes determining whether there may be a gap in funding that precludes private parties from earning a reasonable rate of return on their investment to market standards. If the answer is no, Ehlers will advise that public assistance is not required. If the answer is yes, Ehlers quantifies the public assistance and recommends limits. This further confirms the "but for" clause of the TIF Act.

We will conduct a review and independent analysis of the Property's Owner's sources and uses budget, 10-year operating proforma, and gap analysis prepared by The Laube Companies. Our analysis will include assumptions with current market conditions as we understand them to be on similar projects and markets. We will confirm the Property Owner's assumptions and amount of request or recommend other assumptions, amounts of assistance and structures based on the results of our analysis.

As part of this task, we will conduct a call with the City to:

- Discuss the tasks and timeline of the project
- Obtain background Data (see preliminary list attached in **Appendix A**)
- Identify additional sources of data required to complete our analyses

Note: The Developer Pro forma Analysis fee may be reimbursed to the City by the developer.

Task 2: Tax Revenue Projections. Ehlers will provide projections that estimate the impact of new development to the equalized assessed value of properties and the expected level of tax revenue, in this case property and sales taxes. These projections are used to help determine the amount of tax revenue that may be generated by certain development and the overall amount that may be available to fund development projects.

Task 3: Prepare Summary of Findings and Recommendations Document. We will prepare a memorandum summarizing the results of the evaluation of the Property Owner's project assumptions and gap analysis as well as our projections of property and sales taxes

for discussion with the City Staff. We will convene a call or an in-person meeting with the City to review in detail the results and recommendations with respect to the gap analysis and the project's ability to meet the "but for" test.

Task 4 (Optional): Developer Negotiation and Redevelopment Agreement Implementation. Ehlers has extensive experience in negotiating development agreements for a wide range of commercial, residential, and mixed-used projects. Just as critical as experience in this area, is the need for a consultant that is independent. When Ehlers works in a municipality, it works for the municipality – not the developer.

Ehlers has taken a lead role in many development negotiations, as well as provided feedback on redevelopment agreements negotiated by others. The final agreement is subject to attorney approval. Examples of recommendations Ehlers has made include:

- Amount, type, and timing of incentives or assistance to developers.
    - Receipt of incentives geared toward performance.
    - Incentives based on goals of municipality.
- Use of "Look Back" provisions in development agreements, so that if a project is more successful than projected, the developer returns funds to the municipality.

During and after construction, Ehlers can manage development agreements by determining eligible expenses and calculating reimbursements.

Additional Services

Detailed information about our TIF and Economic Development-related services can be found in **Appendix E.**

Project Pricing

Ehlers will provide TIF and Economic Development Consulting Services outlined in this Proposal for the following Hourly Billing Rates:

Tasks 1, 2 and 3 will be charged per the Hourly rates. Based on our experience with similar projects, our professional fees for Task 1, 2 and 3 will total $12,500.00.

Task 4 (Optional) as well as any Additional Services will be charged on an hourly basis with a general estimated range of fees between $2,000.00 and $8,000.00, depending on extent of time and complexity related to the deal structure and negotiations.

Senior Municipal Advisors	$225.00 per hour
Municipal Advisors	$200.00 per hour
Financial Specialists	$175.00 per hour
Coordinator/Analyst	$150.00 per hour
Technical/Clerical	$75.00 per hour

These rates will be in effect through December 31, 2016 after which rates are subject to adjustment. The pricing estimates provided are not a guarantee of total costs. We will bill on an hourly basis and the actual costs may be lower or higher than the ranges provided above.

Ehlers does not charge for most regular business expenses, except for messenger and overnight services. Ehlers will charge its hourly rate as specified above for one way travel to the Client's offices, Property, or otherwise as may be required.

The City will authorize and direct its administration, attorneys, bond counsel, accountants, engineers, architects, actuaries, and other consultants to prepare and furnish such information as may be reasonably necessary for Ehlers to carry out its duties and obligations, at no cost to Ehlers.

Conclusion

We appreciate the opportunity to work with the City of Batavia. Please feel free to contact us to discuss this proposal or if you have any questions regarding our services. If this proposal is acceptable to the City, please indicate the City's acceptance and authorization to proceed by signing a copy of this letter as directed below.

Sincerely,

Jennifer M. Tammen
Municipal Advisor/ Principal

Maureen Barry
Senior Municipal Advisor/Vice President

Agreement

The City of Batavia, Illinois hereby accepts the above Request for Proposals for Economic Development Consulting Services regarding the development, qualification, and adoption by its authorized officers, this ____ day of _____, 2016.

Attest: _____ By: _____

Title: _____ Title: _____

Please send a copy of the agreement page with original signature to:

Ehlers & Associates, Inc.
525 W. Van Buren St, Suite 450
Chicago, IL 60607-3823

Appendix A: Elements of a Project Review for Municipal Financial Incentives

General Project Information

1. Project narrative, including description of current and end user(s), project features, etc.
2. Project address and list of project PINs
3. Copies of current tax bills
4. Project start and end dates
5. Total development costs
6. Description of public benefits, i.e. green space, jobs, etc.

Project Proforma

Sources of Financing

1. Principal of all Debt
   a. Interest Rate
   b. Term
   c. Payment Schedule
2. Equity
3. Grants
4. Other

Uses of Financing

1. Land Acquisition
2. Site Costs
3. Hard Costs
4. Soft Costs

* Supporting documentation of costs may be requested, i.e. cost estimates, project period real estate taxes, environmental remediation, etc.

Annual Cash Flow

1. Income, Broken Down by Type, and Detail
   (Include annual inflation increase estimates)
   Examples = Rent Per Unit – Number of Units
   = Rent Per Sq. Ft. – Number of Sq. Ft.
   = Sale of Units – Number of Units
   = Commercial Rent – Number of Sq. Ft.
   = Other Income (i.e., garage rent, storage rent)

2. Expenses (Include annual inflation increase estimates)
   Annual Expense by Category and Calculation Method (i.e., percent of rent)

3. Annual Debt Service Payment

4. Calculated Rate of Return, i.e. IRR, Cash on Cash, etc.

Request for Assistance & Proposed Deal Structure

1. Up front, Over Time ("Pay as you Go" (PAYGO), or Developer Note
   a. If Up front: What is Present Value of Request?
   b. If Over Time/PAYGO: What is Annual Amount? Assumed Interest Rate?
   c. If Developer Note: Assumed Interest Rate? Other Terms?

2. Why is Assistance Needed?
   a. Example: To meet annual cash on cash requirement of Investor of __xx__%

Appendix B: About Ehlers

Ehlers is an independent municipal advisory firm. Ehlers' staff has had the pleasure of providing service to local governments throughout Illinois and the Midwest since 1955. Ehlers has over eighty professionals that serve clients in the Midwest from our offices in Roseville, Minnesota; Waukesha, Wisconsin; Denver, Colorado; and Chicago, Illinois. The City will be served by staff from our Illinois office.

Our goal is helping local governments find the financial resources they need to build the communities they envision.

Our services are grouped into four main categories, representing our core areas of expertise:

- Economic Development and Redevelopment
- Debt Planning & Issuance
- Financial Planning
- Strategic Communications

At Ehlers, all employees have ownership in the company and take ownership in serving clients. Ownership sets the tone for the operation of the firm and the nature of the services clients receive. All-employee ownership at Ehlers means:

- Every Ehlers employee has a vested interest in providing the best possible service.
- Our focus is on the long-term success of our clients, not solely on short-term profit and return on investment.

Our dedication to "how" we deliver our services is as unique and comprehensive as the service itself. We listen to our clients' needs, maintain highly qualified employees to team with them, and present customized options to help decision-makers confidently select the best and lowest cost solutions for their citizens.

TIF District development, qualification, redevelopment planning, and adoption are key parts of our Economic Development and Redevelopment services. Ehlers has helped communities use TIF to upgrade and improve infrastructure; revitalize deteriorated or outmoded commercial areas; attract development to improve job opportunities and the local economy; rehabilitate neighborhoods; and bring new development to areas that are impaired by market or physical constraints.

Additional information on Ehlers' TIF related services is enclosed as **Appendix E.**

Federal Registration as a Municipal Advisor

The Dodd-Frank Wall Street Reform and Consumer Protection Act (the "Act") enacted on July 21, 2010 requires firms/persons who are "Municipal Advisors" to register with the Securities and Exchange Commission (SEC) and Municipal Securities Rulemaking Board (MSRB). Generally, a municipal advisor is any person that provides advice to a municipal entity or obligated person concerning the timing, terms, structuring or similar matters of a municipal security or provides advice with respect to municipal financial products. Municipal Advisors have a federal fiduciary duty to represent their municipal entity client's best interests as part of any engagement.

Ehlers as a firm and our financial advisors are included within the definition of "municipal advisors" and are required to register with the SEC as such. We have registered as a Municipal Advisor with the SEC. Ehlers Registration No. is 866-00266-00.

Ehlers is also a Charter member of the National Association of Municipal Advisors (NAMA). This professional association is dedicated to high ethical standards and is committed to providing independent advice when serving as advisors to municipal entity clients.

Potential Conflicts of Interest

The key characteristic of Ehlers is "independence." For 60 years, Ehlers has been committed to a fiduciary relationship with our clients. This means that we serve *only* your community's best interests in any financial transaction – not the interests of developers, investors, underwriters, banks or other private parties.

Ehlers and Associates, Inc. is a wholly-owned subsidiary of the Ehlers Companies. Ehlers and Associates, Inc. provides all financial advisory and related services and is the corporate entity responsible for this proposal. Ehlers and Associates, Inc. is affiliated with both Bond Trust Services Corporation and Ehlers Investment Partners (EIP) as additional, wholly-owned subsidiaries of the Ehlers Companies. Bond Trust Services is fully integrated with the Depository Trust Company (DTC) and serves as paying agent for the majority of our bond sales. EIP, a federally registered investment advisor, provides independent investment advisory services. Currently, these firms have no relationships with the City of Batavia.

Appendix C: Project Team & Resumes

Ehlers offers a group of individuals with an exceptional combination of expertise and experience to act as the Economic Development and TIF Team for the City. Below is information about the project team and staff of the firm.

Ehlers' staff has worked in municipal management, administration, and financial management, school district administration, regional planning, economic development, and state legislative support. This team serves as advisor to many Illinois local governments including the Village of Bradley, Village of Clarendon Hills, Village of Frankfort, City of Geneva, Village of Matteson, Village of Oak Park, City of Peoria, Village of Tinley Park, Village of Westmont, City of Wheaton, and the Village of Wheeling, among others.

Ehlers will use a team approach with municipal advisors assisted by research analysts. This approach affixes responsibility and assures continuity of service for the client from the time of the proposal through any follow-up work. It also allows a better match of Ehlers' staff expertise and experience to the particular needs of the City.

Jennifer Tammen, Municipal Advisor/ Principal. Jennifer will serve as the lead advisor for the City. As such, all work will either be completed by or directly overseen by Jennifer and she will attend scheduled meetings. Jennifer joined Ehlers in 2014. Jennifer has over 15 years of progressive experience and success within the real estate development field. She has represented clients on matters related to zoning and entitlements, planning, economic development, TIF, pro forma analysis, deal structuring and developer negotiation, and project management. Prior to joining Ehlers, Jennifer formed and worked for her own firm, THE TAMMEN GROUP. She has also served as Director of Planning for Norwood Builders, Inc., as Redevelopment Project Manager for the City of Oak Park, Illinois, and worked as a project associate for S.B. Friedman & Company. Jennifer has been a key team member on a number of projects including TIF eligibility studies, financial feasibility and modeling, and redevelopment planning. Jennifer is also an experienced meeting facilitator and has successfully led dozens of community meetings and presentations in addition to hundreds of meetings with clients, municipal and agency officials and staff, community residents, businesses, and other stakeholders.

Tricia Marino Ruffolo, Municipal Advisor. Tricia recently joined our Illinois Team in 2015 as a Municipal Advisor where she focuses primarily on TIF, Business Districts, and other economic development related projects including developer pro forma review. Tricia's previous experience includes serving the City of Chicago for the last three years as a Financial Planning Analyst in the TIF Division of the Department of Planning and Development. Prior to that, she formed her own real estate consulting business after 15 years with Louik/Schneider & Associates, Inc. where she served as Vice President. Louik/Schneider was a multi-disciplinary consulting firm offering professional service in the fields of urban planning, economic development including TIF, zoning, real estate development and financing for municipalities, small companies, developers, and large retailers.

Maureen Barry, Senior Municipal Advisor/Vice President, will serve as one of the City's advisors and provide project oversight to the team. Maureen joined Ehlers in January 2008. Prior to that time, she worked directly for local governments for over 15 years, most recently as the Assistant Village Manager in Wilmette, and before that for the City of Evanston and the City of

Glendale, Arizona. In these roles, she worked with local government leaders and other key players in planning and managing a wide variety of governmental operations and projects. Maureen has assisted Ehlers' clients with economic development consulting projects in the Village of Glen Ellyn, City of Macomb, City of Peoria, Village of Oak Park, City of Rock Island, Village of Tinley Park, Village of Villa Park, and Village of Wheeling, among others.

Mindy Barrett, TIF Coordinator. Mindy has been with Ehlers since 2006 and serves as a Tax Increment Financing Coordinator in our Chicago office. She is responsible for assisting in the development and implementation of TIF projections and analysis, including gathering data from counties and the state of Illinois. Mindy would be involved in this project for Batavia, assisting data research and financial modeling.

In addition, the Ehlers Project Team will use expertise and resources from our other offices, if necessary, to meet the needs of the City. Resumes for Jennifer Tammen, Tricia Marino Ruffolo, and Maureen Barry are included in the following pages.

Jennifer M. Tammen
Municipal Advisor/Principal

Jennifer joined Ehlers in 2014 after serving as Principal and Owner of THE TAMMEN GROUP, a real estate development consulting and public affairs advisory firm. She has over 15 years of experience representing developers, property owners, and quasi-public agencies on matters related to zoning and entitlements, planning, economic development, tax increment financing (TIF), deal structuring, and early-stage project management for multi-family housing, mixed-use retail, municipal buildings, and real estate related policy matters.

EHLERS
LEADERS IN PUBLIC FINANCE

Jennifer M. Tammen
Direct 312.638.5263
jtammen@ehlers-inc.com

Areas of Expertise

Tax Increment Services
- Tax Increment Plans
- TIF Feasibility Studies
- Gap Financing Analysis
- Public Revenue Projections
- TIF Revenue Bond Financing

Development & Redevelopment
- Redevelopment Planning
- Developer *Pro forma* Analysis
- Redevelopment Agreement Structuring and Negotiation
- Project Management Services
- Developer Incentives Analysis

Public Participation
- Public Participation Process
- Citizen Advisory Committee Facilitation
- Strategic Communications Planning

Intergovernmental and Public/Private Partnerships
- Intergovernmental and Public/Private Project Studies and Negotiations

Professional Memberships
- Illinois Tax Increment Association (ITIA)
- Lambda Alpha International (LAI), Ely Chapter
- Urban Land Institute (ULI)
- Commercial Real Estate Executive Women of Chicago (CREW)
- International Council of Shopping Centers (ICSC)City Club of Chicago
- College of Urban Planning and Public Affairs Alumni Association, Board Member

Education
- Bachelor of Arts (Political Science), DePaul University
- Master of Urban Planning and Policy, College of Urban Planning and Public Affairs, University of Illinois at Chicago

Notable Projects
- Responsible for the approval of over $600 million in new real estate development projects and business retention and more than $35 million in TIF and other financial subsidies.
- City of Wheaton, IL; Downtown Projects Financing Strategy: Financing analysis and consulting services for the implementation of approximately $55MM in capital costs and $750k in annual operating costs for Downtown Wheaton per the City's Downtown Strategic and Streetscape Plan.
- Village of Clarendon Hills, IL; Prepared and presented a clear analysis of how the Village's current land use regulation impact the feasibility of potential redevelopment projects in the downtown planning area. The results and discussion with the appointed committees and public helped inform discussions related to the Downtown Master Plan Update and was included as part of the final plan update.
- San Francisco, California; The San Francisco Columbarium: Restructured endowment for ongoing capital expenditures. Conditional Use and Certificate of Appropriateness for alterations to an historic structure.
- Melrose Park, Illinois; Westlake Hospital: TIF analysis and redevelopment agreement structuring for capital improvements to retain Village's largest employer.
- Chicago, IL; Old Cook County Hospital and Adjacent Properties: Co-led a team of pro-bono professionals charged with developing a redevelopment strategy for a key market rate real estate development opportunity in the heart of the Illinois Medical District and adjacent to downtown Chicago for mixed-use and revenue generating projects.

Tricia Marino Ruffolo
Municipal Advisor

Tricia joined Ehlers in 2015 after serving most recently as a financial analyst for the City of Chicago's Department of Planning and Development and as Vice President as Louik/Schneider & Associates, Inc. She brings to Ehlers a unique perspective as a consultant for developer and municipalities and as a municipal employee.

EHLERS
LEADERS IN PUBLIC FINANCE

Tricia Marino Ruffolo
Direct 312.638.5262
tmruffolo@ehlers-inc.com

Areas of Expertise

Economic Development
- Tax Increment District and Business District Feasibility Studies and Plans for District Qualification and Amendment
- Project Management Services
- TIF Feasibility Studies
- TIF Revenue Projections
- TIF Increment Analysis
- Development Incentives Analysis & Negotiations
  - *Pro forma* Analysis/But For Test
- Development Strategic Planning
- Developer Attraction and Selection
- Fiscal Impact Analysis

Development & Redevelopment
- Redevelopment Planning
- Developer *Pro forma* Analysis
- Redevelopment Agreement Structuring and Negotiation
- Project Management Services
- Developer Attraction & Selection
- Developer Incentives Analysis

Public Participation
- Public Participation Process
- Strategic Communications Planning

Intergovernmental and Public/Private Partnerships
- Intergovernmental and Public/Private Project Studies and Negotiations

Strategic and Financial Planning
- Goal Setting & Strategic Planning
- Fiscal Impact Studies

Professional Memberships
- Council of Development Finance Agencies
- Illinois Economic Development Association
- Illinois City/County Managers Association
- Illinois Tax Increment Association
- Women in Planning and Development

Education
- Bachelor of Arts (Urban Planning), Lake Forest College

Notable Projects
- Managed the technical process of establishing, amending and closing out over 90 Tax Increment Financing (TIF) districts throughout the Chicagoland Area as both a consultant and as a municipal employee. Successfully qualified over 50 redevelopment areas as TIF districts by effectively managing a myriad of details of the approval process.
- Developed a TIF Designation Procedural Manual for the City of Chicago's Department of Planning and Development details the 75+ steps required for a TIF designation process.
- Initiated review and streamlined procedures for designation TIF districts; identified cost saving measures for notification and mailing procedures and long term record storage as required by the State of Illinois.

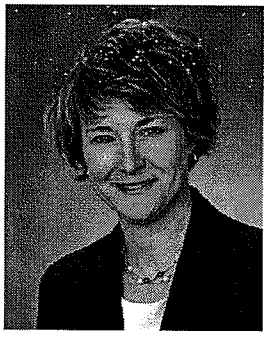

Maureen Barry, CIPMA

Senior Municipal Advisor/Vice President

EHLERS
LEADERS IN PUBLIC FINANCE

Maureen Barry
Direct: (312) 638-5257
mbarry@ehlers-inc.com

Maureen joined the Ehlers Illinois office in 2008 as a Municipal Advisor after working directly for local governments for over 15 years. She specializes in assisting public organizations in Illinois with the design and implementation of financial and economic development solutions. Ehlers' clients benefit from Maureen's broad perspective and hands-on experience in a wide range of local government matters, including tax increment financing, development analysis, project management, debt issuance, and other public finance related projects.

Areas of Expertise

Economic Development & Redevelopment

- Tax Increment District and Business District Feasibility Studies and Plans for District Qualification and Amendment
- Project Management Services
- Revenue Projections
- TIF Annual Reports
- Development Incentives Analysis & Negotiations
  - *Pro forma* Analysis/But For Test
- Development Strategic Planning
- Developer Attraction & Selection
- Fiscal Impact Analysis
- Revenue Bond Financing

Public Participation

- Referendum Strategies
- Public Participation Process

Debt Planning and Issuance

- Analysis & Presentation of Alternative Financing Options, Plans
- Representation to Bond Market & Credit Rating Agencies
- Refundings
- Special Service Area Financing
- Debt Management

Strategic and Financial Planning

- Goal Setting & Strategic Planning
- Financial Management Planning
- Capital Improvements Planning
- Fiscal Impact Studies
- Utility Rate Studies

Intergovernmental and Public/Private Partnerships

- Intergovernmental and Public/Private Project Studies and Negotiations

Certifications

- Certified Independent Professional Municipal Advisor (CIPMA) by the National Association of Municipal Advisors (NAMA)

Professional Memberships

- Illinois City/County Management Association
- Illinois Government Finance Officers Association
- Illinois Municipal Treasurers Association
- Illinois Tax Increment Association
- International City/County Management Association
- Lambda Alpha International (Land Economics)
- Council of Development Finance Agencies

Education

- Bachelor of Arts (Political Science), University of Dayton
- Master of Public Affairs (Public Management), School of Public and Environmental Affairs, Indiana University

Notable Projects

- Completed a study of redevelopment financing options for the Roosevelt Road Business Corridor in Oak Park, IL.
- Prepared TIF Eligibility Reports and Redevelopment Plans for two new TIF Districts in Villa Park, IL.
- Advised the City of North Chicago, IL for the refunding of two bond issues resulting in a substantial savings to taxpayers.
- Negotiated redevelopment agreements for a new commercial center in Bradley, IL and new businesses in Decatur, IL.
- Advised the Village of Wheeling, IL on a long term financial forecast and management plan.
- Completed Annual TIF Reports to the State of IL Department of Revenue for municipalities across Illinois.

Westlake Hospital (Melrose Park, Illinois)

While serving as Principal and Owner of THE TAMMEN GROUP, Jennifer Tammen represented Vanguard Health Systems in securing TIF assistance for extensive capital improvements necessary to ensure the future viability of the Westlake Hospital facilities.

Westlake Community Hospital located in Melrose Park has been serving the south suburbs for over 80 years providing high quality healthcare to the local communities. It is one of the Village's largest employers. In 2010, Resurrection Health Care sold a number of their area hospitals, including Westlake, to various for-profit subsidiaries of Vanguard Health Systems. The purpose of Vanguard's purchase was to re-position the Hospital in order to keep it open and operating. The Hospital was in danger of closing and Vanguard was the only buyer willing to purchase the hospital.

Jennifer prepared the capital improvement budget and TIF analysis and led the team in the redevelopment agreement structuring and negotiation on behalf of Vanguard. Working closely with the Village, we discovered there was a community need for open spaces that could be used for a future dog park and community garden. The team determined that Vanguard's acquisition of Westlake Hospital included excess properties vacant lots. We provided an option to donate some of the vacant properties to the Village to further demonstrate to Vanguard's commitment to providing public benefits to the community.

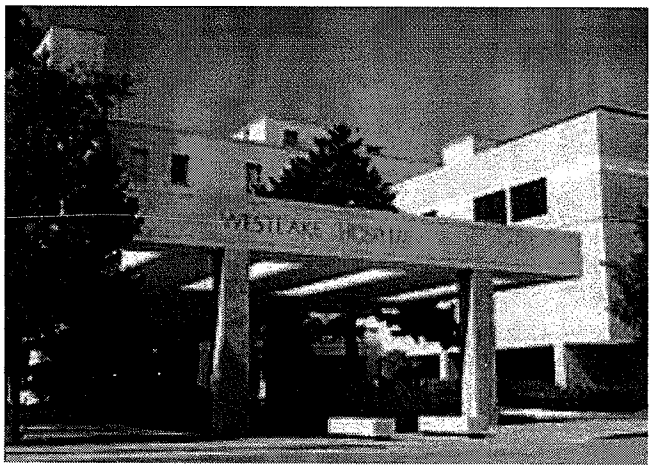

Results:

The Village Board voted unanimously to approve a Redevelopment Agreement to share future incremental property taxes with Vanguard. The Agreement enabled Westlake Hospital to keep its doors open an improve services. As part of the redevelopment of the property and per the Redevelopment Agreement, would undertake significant capital improvements to the physical plant of the building, and undertake the deferred maintenance projects which Resurrection was forced to delay. Additionally Vanguard will invest significantly in the medical facilities of the Hospital by replacing outdated equipment, adding equipment which will enable the Hospital to compete in the new medical climate, and most significantly completely revamping the IT system to meet the new health care requirements.

Contact:

Bernard I. Citron, Attorney at Law
Thompson Coburn LLP
55 E. Monroe, 37th Floor
Chicago, Illinois 60603
Phone: (312) 580-2209
Email: bcitron@thompsoncoburn.com

Appendix D: Related Project Experience

The Ehlers Illinois Team has worked successfully throughout Illinois for over 14 years to accomplish municipalities' development and redevelopment goals. The following summaries describe how Ehlers has recently served other Illinois communities. Contacts for these communities may also be used as references.

City of Wheaton

The City of Wheaton is a mature community in Chicago's western suburbs. To counter deterioration in its downtown, the community instituted a TIF District and began to incent businesses to locate in and improve their downtown operations. Ehlers provided Project Pro forma Analysis and Financial Impact services for the City of Wheaton. For one proposed redevelopment project, a developer requested sales tax revenue sharing through sales tax abatement. Ehlers conducted a pro forma analysis of the developer's project and established that without incentives, the project would not be possible. This gave the City of Wheaton the needed information to make a decision to provide the developer incentives and to what extent those incentives were appropriate. Ehlers has also assisted Wheaton in the implementation of TIF programs through the structuring and sale of financial instruments and increment projections.

Contact:

Donald B. Rose, City Manager
303 West Wesley Street
Wheaton, Illinois 60187
Phone: (630) 260-2012
Email: donrose@wheaton.il.us

Village of Villa Park (Motorcycle Center)

In November 2011, the Village of Villa Park engaged Ehlers to conduct an analysis of a proposal by Motorcycle Center (MCC) to purchase and redevelop the former Oakfield Ford dealership located at the southwest corner of St. Charles Road and Oakland Avenue in Villa Park, within the St. Charles Road TIF District. MCC is a 30+ year-old, Villa Park-based multi-brand European motorcycle dealership and service provider. The relocation to a larger space would enable MCC to add additional manufacturers to its existing brands, expand its showroom and service area, and provide practice areas for instruction and other events. Ehlers prepared TIF and sales tax sharing analysis; provided redevelopment agreement structuring and negotiation for the relocation and rehabilitation of former car dealership property.

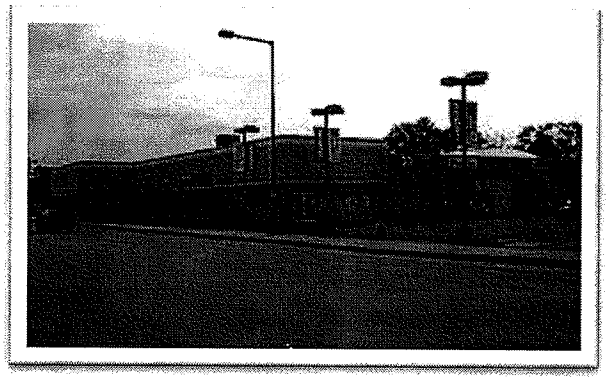

Request and Deal Structure

Ehlers evaluated all of the project assumptions including construction costs, soft costs, and financing assumptions. We evaluated the feasibility of the projects by applying an internal rate of return (IRR) calculation and profit margins for the rental spaces. Additionally, projections of potential

public revenues (property and sales taxes) were estimated. We also reviewed MCC's future sales projections. Ehlers concluded there was a financing gap driven primarily by extraordinary costs related to manufacturer build out requirements and to address maintenance items in the relocation property.

MCC requested financial assistance totaling 21% of total project costs in a combination of a one-time, up-front payment and a sales tax sharing agreement. The up-front payment would come from TIF funds via port from the adjacent Ovaltine TIF Allocation Fund. The sales tax sharing agreement was structured as follows:

- 20 year agreement commencing in 2012
- Establish a base threshold for total sales based upon MCC's total taxable sales over last 5 years (2006-2010)
- 90/10 (MCC/Village) split of Village portion of surplus sales that exceed base threshold until MCC's payback/breakeven is reached. After that, the sales taxes will revert to 100% to the Village.

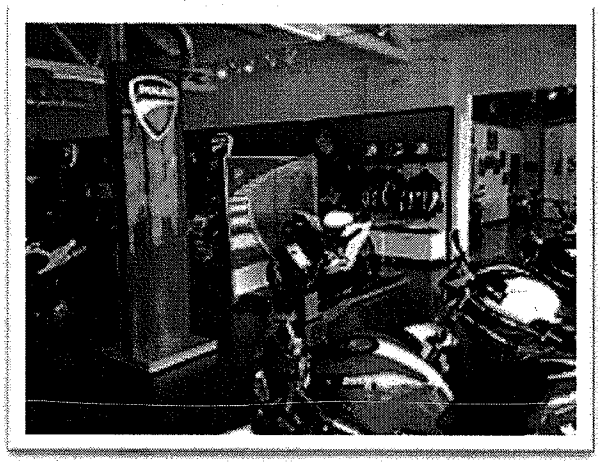

Results

Ehlers' presented the analysis during a public meeting in January 2012. The Village Board voted unanimously to adopt the Redevelopment Agreement which included the terms outlined in the deal structure. MCC completed the renovations as proposed and opened in the fall of 2012. Results include redevelopment of over 20% of the entire land area of the TIF District, increased sales tax revenue and business retention, renovation of an existing building and increasing the local, regional and international visibility of Villa Park by increasing the number of visitors to this destination retail and service business.

Contacts:

Rich Keehner, Jr., Village Manager
20 S. Ardmore Avenue
Villa Park,, Illinois 60181
Phone: (630) 592-6051
Email: rkeehnerjr@invillapark.com

Bernard I. Citron, Attorney at Law
Thompson Coburn LLP
55 E. Monroe, 37th Floor
Chicago, Illinois 60603
Phone: (312) 580-2209
Email: bcitron@thompsoncoburn.com

Village of Lemont

The Village of Lemont is a historic community along the Des Plaines River, the Chicago Sanitary and Ship Canal, and the Illinois and Michigan Canal. The Village of Lemont wished to have their historic assets be a catalyst for new downtown development. Lemont had a successful, older TIF District in place, but realized this TIF would not have enough years remaining to encourage further redevelopment. Ehlers assisted Lemont with the creation of a second TIF District (Downtown Canal TIF) and undertook a financial analysis to make sure revenue would support a refinancing of TIF bonds. With a development project on the table, Ehlers prepared increment forecasts and pro forma analysis. Ehlers assisted the Village in developer negotiations to create the redevelopment agreement. The project is constructed and almost fully occupied. The Village has made many public improvements with the assistance of TIF funds, including the construction of a parking structure.

Lemont then engaged Ehlers in 2008 to assist the community in the creation of an additional TIF (Gateway TIF), located on the Village's northeast border. The area has been occupied by heavy industrial uses, many of which are still present, such as automobile and construction storage, wrecking, and utility transmission uses. Deterioration, a lack of access, and inadequate utilities are the main issues to be overcome in this TIF, as well as environmental issues, which may impact adjacent properties once redevelopment occurs. Redevelopment has not yet occurred in the Gateway TIF because of the broader economy. In recent months, interest in the area by the development community has been renewed. Ehlers is currently working with the Village assemble parcels, annex them, and add them to the Gateway TIF to attract a developer to the area.

Ehlers continues to serve as Lemont's TIF consultant, preparing the Village's annual TIF reports and assisting in their annual Joint Review Board meetings.

Specialized Project Experience

- TIF district creation
- TIF amendment
- Downtown redevelopment
- Financial analysis
- TIF increment projections
- Pro forma analysis
- Developer negotiations
- Public infrastructure finance

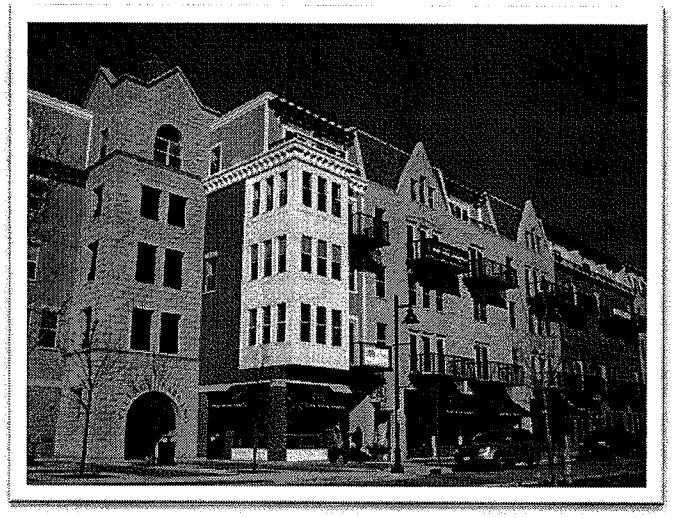

Contact:

George Schafer, Village Administrator
418 Main Street
Lemont, Illinois 60439
Phone: (630) 243-2709
Email: gschafer@lemont.il.us

Village of Oak Park, IL (Volvo of Oak Park)

While serving as Redevelopment Manager for the Village, Jennifer Tammen was a key team member in executing a relocation and revenue sharing deal with West Suburban Auto for a new Volvo dealership resulting in business retention and increased sales tax revenues.

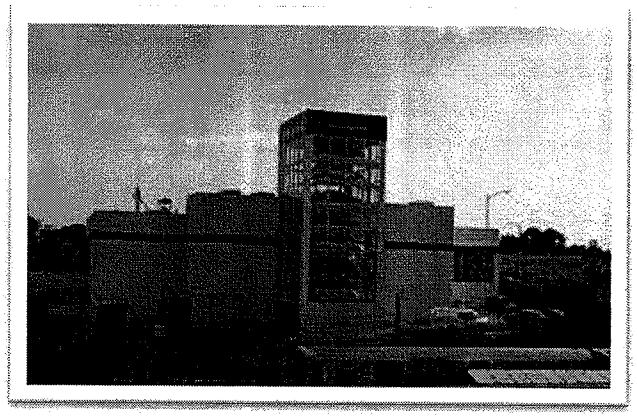

Volvo of Oak Park is a state-of-the-art facility that activates and capitalizes on an underutilized site with outstanding access to I-290 and the CTA Blue Line. Jennifer worked with the business owner, Volvo of North America, and the elected officials to structure and prepare an analysis that enabled the dealership to stay in the Village thereby retaining valuable sales tax dollars within the community.

Results:

The deal allowed Volvo to significantly expand new car sales capacity and service which in turn yields a significant increase in sales tax revenue to the municipality. The relocation site was a Village-owned property located in a dormant TIF District. The TIF was re-established thereby generating significant incremental property taxes that are captured within the District for public improvements and other TIF-eligible expenses.

Contact:

Loretta Daly, Business Services Manager
123 Madison
Oak Park, Illinois 60302
Phone: (708) 358-5648
Email: ldaly@oak-park.us

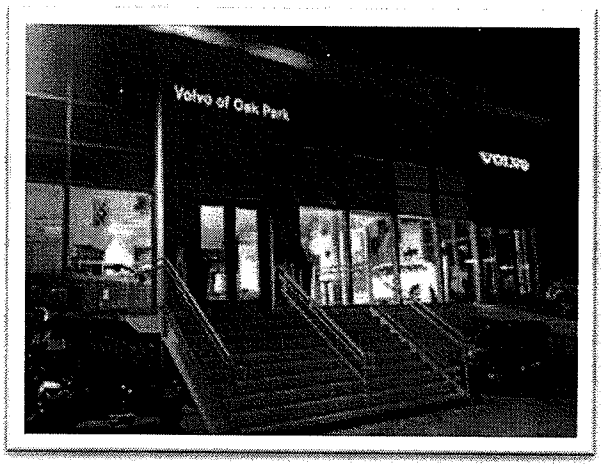

Village of Hanover Park

While serving as Principal and Owner of THE TAMMEN GROUP, Jennifer Tammen provided strategic development consulting, economic incentives analysis, and developer outreach and recruitment efforts on behalf of Village staff and elected officials.

TIF Redevelopment Agreement Discussions: Assisted in meetings/teleconferences with retailers, local business owners, and developers interested in obtaining Village TIF, including:

- Facilitation of discussions with an established local grocer regarding the store's potential expansion. Prepared an outline of development project, business and financial information required for evaluation of a future request for assistance, explanation of TIF eligible costs, process and analysis of projected revenue from expansion project
- Facilitation of TIF assistance discussions in response to separate proposals from a developer and a commercial operator for various sites in the Village's Town Center

Development Incentive Package Draft: Preparation of a comprehensive incentive package that outlines available development incentives in response to a developer "shopping" for sites throughout the region for a particular user.

TIF Application Draft: Preparation of TIF application information needs, outlining the type of information required for submittal to assist applicants. The information submitted is intended for Staff evaluation and recommendation to present the Village Board with the information needed to evaluate and determine the appropriate amount and structure of assistance for new development and assistance to existing businesses and property owners.

Public Revenue Projections and Strategic Recommendations - Village Owned Commercial Shopping Center: Performed analysis including projections of public revenues including incremental property taxes and sales taxes based upon the current disposition of the site and current redevelopment assumptions. Also included recommendations to minimize the Village's financial risk and more effectively leverage its current investment by soliciting developers to purchase and redevelop the shopping center via a Request for Qualifications (RFQ) or Request for Proposals (RFP) process.

Results:

The Village issued an RFQ/P for the purchase and redevelopment of the Hanover Square Shopping Center. The Village's RFP incorporated many of Jennifer's recommendations including considering the potential of various structures by which the property could be redeveloped with the Village's participation in the project vs. an outright sale.

Contact:

Rodney S. Craig, Mayor
2121 Lake Street
Hanover Park, IL 60133
Phone: (630) 823-5900
Email: rcraig@hpil.org

Appendix E: Additional TIF Services and Fees

Ehlers provides additional services to further the goals and objectives of the City. These services could be included under a separate scope and agreement following this engagement. Ehlers is available to assist the City with any or all of the additional TIF-related services below and as detailed in the following section.

- TIF Eligibility Study
- Redevelopment Plan
- Housing Impact Study
- Business District Eligibility Study and Implementation
- Review of Taxing District Impact
- TIF Annual Reporting
- TIF Financial Feasibility Study- for Developer Notes or for the issuance of bonds
- Debt Capacity Analysis- Review current outstanding debt and potential revenue from new districts that could support future debt issuance for public projects that may directly or indirectly incentivize and leverage private investment within the City.
- Debt Issuance*
- Provide ongoing advisory service to City staff and elected officials with respect to TIF funding and public and private projects

Note: Ehlers can assist with the issuance of debt, subject to a separate service agreement. Fees would depend upon the size and complexity of issue and form of debt.

These services are not part of the "*Scope of Services*" within this proposal. Ehlers will perform the services listed below upon the request of and by separate agreement with the City.

TIF Financial Feasibility Study

Ehlers can provide the necessary financial feasibility study for the construction of Developers Notes or for the issuance of bonds. If Ehlers serves as the Financial Advisor of bonds, this study would be included as part of the debt issuance services.

Fee: $75.00 - $225.00 per hour

Fee: Dependent upon the size and complexity of issue and form of debt

Review of Taxing District Impact

As part of negotiations with the overlapping taxing districts on the creation, expansion, or extension of a TIF district, the City may need to provide fiscal impact information to the school or other taxing district. Ehlers can prepare this information on behalf of the City. Ehlers would be prepared to discuss findings with both the City and the taxing districts to assist the City in its final strategy.

Fee: $75.00 - $225.00 per hour, not to exceed $6,000

TIF Reports

Ehlers is available to prepare annual TIF reports or to assist staff in the preparation of these reports. As part of this activity, Ehlers will attend and present reports at the Joint Review Board meeting.

Fee: $2,500 - $4,500 per report, depending on quality and availability of information provided by the City and preparation time for specific report(s).