CITY OF BATAVIA
100 N. Island Ave., Batavia, IL 60510
(630) 454-2000
www.cityofbatavia.net

PLAN COMMISSION
AGENDA

Monday, November 28, 2016
7:00 PM
City Council Chambers - First Floor

1. Call To Order
2. Roll Call
3. Items Removed/Added/Changed
4. Blaine Street School Redevelopment, 607 South Jefferson Street

    - PUBLIC HEARING: Amending the Official Zoning Map from R1-H, Single Family Residential High Density to R2, Two Family Residence District
    - PUBLIC HEARING: Amendment to the Zoning Map for a Planned Development Overlay
    - Design Review

    Christine Winkle - Spillane & Sons, Applicants
    CONTINUATION FROM NOVEMBER 16, 2016

    Documents:

    PC-BLAINEST-PDDR.PDF

5. Other Business
6. Adjournment

Plan Commission
Tom Gosselin
Sara Harms
Joan Joseph
Tom LaLonde, Chair
Sue Peterson
Gene Schneider, Vice-Chair

CITY OF BATAVIA

DATE: November 10, 2016

TO: Plan Commission

FROM: Drew Rackow AICP, Planner

SUBJECT: Blaine Street School Redevelopment, 607 South Jefferson Street

- **PUBLIC HEARING:** Amending the Official Zoning Map from R1-H, Single Family Residential High Density to R2, Two Family Residence District
- **PUBLIC HEARING:** Amendment to the Zoning Map for a Planned Development Overlay
- Design Review

Christine Winkle - Spillane & Sons, Applicants

Background and Information Submitted by the Applicant

A Public Hearing is scheduled for the November 16th Plan Commission meeting to review a Zoning Map Amendment with a Planned Development Overlay and Design Review for a proposed redevelopment of the former Blaine Street School. The applicants, Christine Winkle and Mike Spillane of Spillane & Sons, propose to convert the existing building into a two unit duplex and construct one single family residence west of the existing building. Two garages would be constructed to serve the duplex.

The school building was constructed in 1909. It was last used as a Trade School for Painters. In 2004, a former owner proposed redeveloping the property for office use. This application was withdrawn and the property has remained unoccupied since that time. The property is designated on the Comprehensive Plan Land Use Map as Residential 3.5-5 dwelling units per acre and presently zoned R1-H Single Family High Density Zoning District. The property is currently configured (and allowed under the Zoning Code) to allow three single family residential lots.

Due to the dimensions of the corner property, the front property line would be Blaine Street. In order to address this, the proposed plan would seek modifications to allow certain setbacks, such as the location of a garage in the front setback area. The proposed modifications would also allow the single family lot to meet the current R1-H zoning setbacks for its property also to become zoned R2.

Staff Analysis

Overall, Staff believes that the proposal is an appropriate plan to allow for the preservation of a historic building, creating an appropriate adaptive reuse. The proposal maintains the density of units already allowed on this property. Placing both proposed properties under one district creates a consistent underlying zoning district for the Planned Development. In addition to the needed Zoning Code modifications, staff notes a some minor site requirements that would be considered as conditions of approval.

Design Review is required for the proposed Two-Family property. The proposed single family home's design is not part of the scope of Design Review, but is indicated to show the proposed setbacks and use.

Setbacks: Modifications to the Zoning Code are necessary due the configuration of the existing building relative to the proposed property lines. The proposed configuration puts the "front" for Zoning purposes along Blaine Street. Due to the nature of the proposed adaptive reuse, the modifications allow the creation of one single family lot and maintain the number of units otherwise

allowed on the property. Requiring minimum R2 District setbacks would not allow for the single family residence to be added.

The principal structure (the old Blaine St. School building) conforms to the proposed setbacks. The proposed single family residence would meet R1-H setbacks, but under the R2 district, relief is required. The front setback under R2 would require the home to be setback 25 feet, rather than 20 feet (inclusive of the front porch). The proposed location is consistent with R1-H setback and the porch allowance. Required Minimum Perimeter landscape requirements would also need modification, as the R2 district contemplates larger duplex lots rather than smaller single family parcels.

For the garages, setback modification is necessary to allow the north garage to be located in the front setback area. An encroachment of an accessory structure 9.5 feet into the required front setback is proposed. Similar relief would be required if this was a corner side property line. Due to the configuration of the site, the proposed garage location best balances typical detached garage location for a duplex residence with the space available on the site to build it. Similar relief is necessary for the Minimum Perimeter Landscape Area in this instance.

Building Façade: For the most part, the School building would remain unchanged. New windows would be installed, with a number of window openings that were filled in (north elevation to be restored. Privacy windows would be added to the (west elevation) to provide natural light into proposed bathrooms. A raised deck would replace the existing fire escape.

Access/Parking: The applicant proposes to use two existing driveway entrances on Jefferson Street to serve the duplex's two car garages. Existing sidewalks would provide pedestrian access to the site. As the existing accesses are unchanged, the driveway aprons are wider than the adjacent driveway and exceed the current driveway requirements. Staff recommends reduction of the driveway aprons to match the proposed driveways, consistent with Code requirements. Staff believes this is justified with the change of use and in conjunction with the scope of site work to be undertaken.

Landscaping: The applicant has provided a landscape plan for the duplex site. Plantings use a number of native species and meets requirements for the number of shrubs. Zoning Code requirements necessitate one additional tree, based on the street frontage lengths. Staff recommends a condition to require that tree, as room exists on the north east portion of the site. Shrubs would provide screening between the rear of the duplex and the proposed single family residence. Additional room exists for an additional parkway tree on site, which should also be added to the site plan.

Zoning Map Amendment Findings:

Amendments to the Zoning Map/Planned Development Overlay. Staff supports the proposed zoning map amendment in association with the Planned Development Overlay. The proposed R2 Zoning District would allow for the preservation of the existing building, while allowing the same number of units that would otherwise be allowed on the property. Comprehensive Plan Goals, like Land Use Goal 7, Policy C, which encourages the preservation and use of Historic Structures in redevelopments would be met. A similar Urban Design Policy of Goal 2 and Policy a and c, would also benefit from this change. Additionally housing goals such as Goal 1 Policy f, to "encourage varied housing style, densities and types within neighborhoods would be furthered.. For rezoning of property, the Plan Commission must review and approve the Findings as listed below. Staff has provided information relative to each Finding for the Commission to consider.

1. All required public notice has been conducted in accordance with applicable state and local laws;

Finding: The applicant executed the notice mailing and posting of the properties pursuant to the City Code. Signs were posted on November 1, 2016. Notice was also published in the Daily Herald on this date.

2. All required public meetings and hearings have been held in accordance with applicable state and local laws.

Finding: With the hearing expected to be conducted on November 16, 2016, this finding will be met.

3. The extent to which the proposed amendment to the Official Zoning Map conforms generally to the goals and policies of the Comprehensive Plan and Comprehensive Plan Land Use Map.

Finding: The proposed amendments to the Zoning Map are consistent with several goals and policies of the Comprehensive Plan, which encourage varied housing types and the preservation of existing structures. The proposed district matches the density specified by the Comprehensive Plan.

4. Is the proposed zoning district and the development it allows compatible with the existing uses and zoning of nearby property?

Finding: The area is characterized by adjacent single family residential along with some two family dwellings. The proposed district allows density consistent with the surrounding properties.

5. Is there evidence to suggest that property values will be diminished by the particular zoning restriction changes?

Finding: There is no evidence to suggest that property values will be diminished by the proposed R2 District for the subject properties.

6. If any property values are diminished, does the diminishment promote the health, safety, morals, or general welfare of the public?

Finding: There is no evidence to suggest any diminishment, the health, safety, morals and general welfare with the proposed change. The proposed change is consistent with the Comprehensive Plan Land Use Map, and reflective of density allowed by right on this property under the existing district.

7. Does the proposed zoning change provide a greater relative gain to the public as compared to the hardship imposed on the individual property owner?

Finding: The zoning change will provide greater gain to the general public by preserving an historic building in good condition in the existing neighborhood. The proposed district's limitations are consistent with the existing single family district in regard to density, and the proposed setbacks under the planned development.

8. Is the subject property is suitable for the zoned purpose?

Finding: The properties are located in an area that contains uses similar those allowed in the R2 district (existing two family dwellings) and R1-H District, similar to other adjoining uses. The R2 district does allow single family residences. The properties are configured to uses that conform to the proposed district.

9. Has the length of time the property has been vacant as zoned been excessive, considering the context of land development in the area in the vicinity of the subject property?

Finding: The properties have been vacant or unoccupied since 2004 when last used as a Trade School. Surrounding properties had been developed and under continuous use since that time. The existing property has remained vacant due to the historic building needing to be adapted for continued use. The

length of time the properties have been unused is excessive with nearby properties having been used during this vacancy.

10. Is there a community need for the proposed zoning or use?

Finding: Overall, there is little undeveloped property under the proposed zoning district. The proposed change would add to the housing mix, while also providing a single family residence.

Design Review Findings: Plan Commission action on Design Review is final. In considering approval of Design Review, the Commission must arrive at findings for approval as specified in the Zoning Code. Staff believes that the findings can be found in the affirmative. Staff provides the following responses for the Commission's consideration.

A. The project is consistent with applicable design guidelines: The proposed improvements would be generally consistent with Design Guidelines for Multiple Family Residential Projects, as applicable to duplexes.

B. The project conforms to the Comprehensive Plan, and specifically to the Land Use, Urban Design, and Environment Elements: As a proposed adaptive reuse, the proposed design preserves an important historic structure, updating it for long term use and re-investment. The proposed change is consistent with density requirements. The proposed design is consistent with goals of developing to blend with the existing context.

C. The project is consistent with all applicable provisions of the Zoning Code: The project requests relief from the Zoning Code through the planned development to address unique attributes encountered with adaptive reuse. In all other regards it will be consistent with the Zoning Code.

D. The project is compatible with adjacent and nearby development: The proposed development, is consistent with the existing character of the structure. The plan would restore the existing building from a more public use, creating more green space and minor modifications to the façade. The proposed residence is similar the surrounding single family district.

E. The project design provides for safe and efficient provision of public services: As approved, public services can be delivered safely and efficiently.

Staff Recommendations

Staff recommends the Plan Commission open and conduct the public hearing for the Planned Development concurrent with its consideration of the Design Review. After closing the hearing, the Commission should take the following actions.

Planned Development. Staff recommends the Commission recommend approval of the Planned Development to include the following modifications to the Zoning Code and conditions:

1. Table 2.204 to allow setbacks and minimum required perimeter landscape areas as depicted on the proposed Planned Development Site Plan.
2. Table 2.204 to allow a proposed Single Family parcel to otherwise comply to Table 2.104 of the Zoning Code.

3. Other modifications as necessary to develop the plan in accordance with the proposed Site Plan.
4. Provision of drainage and utility easements, as required by the Public Works Department with Building permit review.
5. Addition of one tree to the Landscape Plan, subject to Staff Review
6. Addition of one parkway tree, subject, subject to Staff Review
7. Modification of the proposed driveway aprons to comply to current Code requirements.

Design Review. Staff recommends the Commission review and take action on the Findings for Approval as noted in the Staff Memo. Staff recommends the Plan Commission approve Design Review, subject to City Council approval of the Planned Development.

Attachment: Application Package

c Christine Winkle, Applicant
Mike Spillane, Applicant
Mayor and City Council
Department Heads
Media

Blaine Street School Project
607 S. Jefferson

The Winkle family of Batavia, along with Spillane and Sons Building and Remodeling, is proposing to convert the existing Blaine Street School building, built in 1906, into a Duplex. The existing structure will be rehabbed for modern use. We will convert the 4 room schoolhouse into a duplex where each unit will have approximately 1400 square feet of living space. We will also construct a garage for each unit on the north and south sides of the building. Additionally, we are creating a single family lot to be built upon at a later date.

The current zoning for the property is R-1h which would allow us to remove the existing building to construct 3 single homes. We do not want to remove the building due to its historical significance and being a longtime fixture in the neighborhood. Our proposal saves the existing building and adds to the neighborhood charm and character.

We are asking for a R-2 zoning along with a PUD. This zoning will allow us to reuse the existing structure and place two families into the current building. We are also going to use the back 3rd of the property to construct a home that will fit into the neighborhood. The R-2 zoning will allow for the same number of families to live on the property as the current R1-h zoning. Due to the unique property and 100 year old building, a PUD will be needed to allow for each garage to be built to effectively reuse the existing building.

We believe the reuse of this historic structure and property will allow the building to remain in place and bring 3 more families into Batavia. Spillane and Sons Building and Remodeling has a proven track record of constructing and remodeling homes that fit and enhance the neighborhood landscape.

LOCATION MAP

NOT TO SCALE

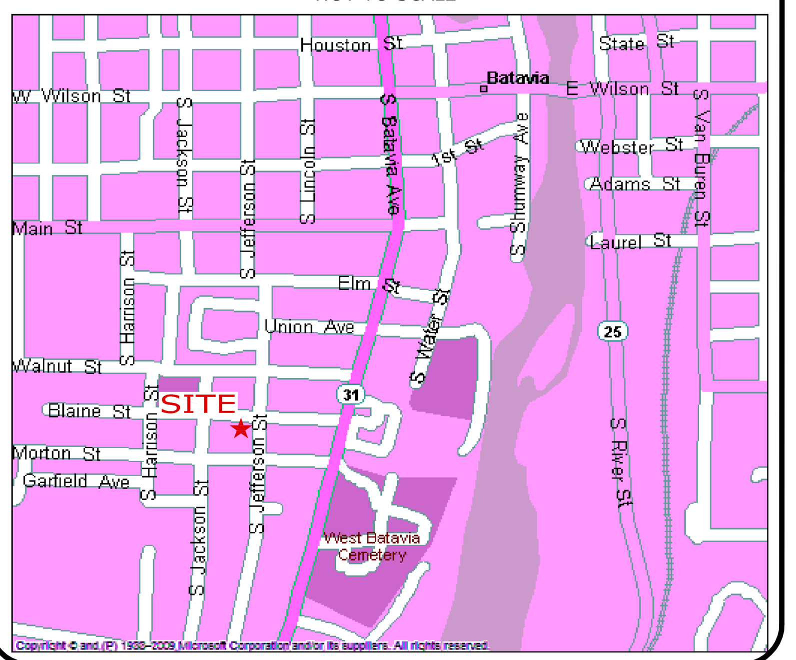

LEGEND

Symbol	Description	Symbol	Description
◎	MANHOLE	●	FOUND OR SET MONUMENT
○	CATCH BASIN	✢	FOUND CUT CROSS
□	INLET	■	FOUND OR SET CONCRETE MONUMENT
⊕	VALVE		
	FIRE HYDRANT	100.00'	MEASURED
	TRAFFIC SIGNAL	(25')	RECORD/DEED
	TRAFFIC SIGNAL BOX	DOC. NO.	DOCUMENT NO.
	TELEPHONE PEDESTAL		EXISTING WATER LINE
	LIGHT POST		EXISTING SANITARY LINE
	SIGN		EXISTING STORM LINE
	EXISTING BUILDING		PROPOSED
	EXISTING CONCRETE		NEW HOUSE
			NEW CONCRETE PAVEMENT
	EXISTING SPOT ELEVATION	723.50	PROPOSED SPOT ELEVATION
	EXISTING CONTOUR LINE	723	PROPOSED CONTOUR LINE
	EXISTING SURFACE DRAIN FLOW DIRECTION		PROPOSED SURFACE DRAIN FLOW DIRECTION
TC	TOP OF CURB	W	
BW	BACK OF SIDEWALK	S	SANITARY SERVICE LINE PROPOSED WATER SERVICE LINE
FF	FINISHED FLOOR		TREE SAPLING
TF	TOP OF FOUNDATION		
GF	GARAGE FINISHED FLOOR		
TW	TOP OF WALL		
GB	GRADE BREAK		

SCALE : 1" = 20'

0' 10' 20' 40'

BEARINGS SHOWN HEREON ARE BASED UPON ILLINOIS STATE PLANE, EAST ZONE 83-03

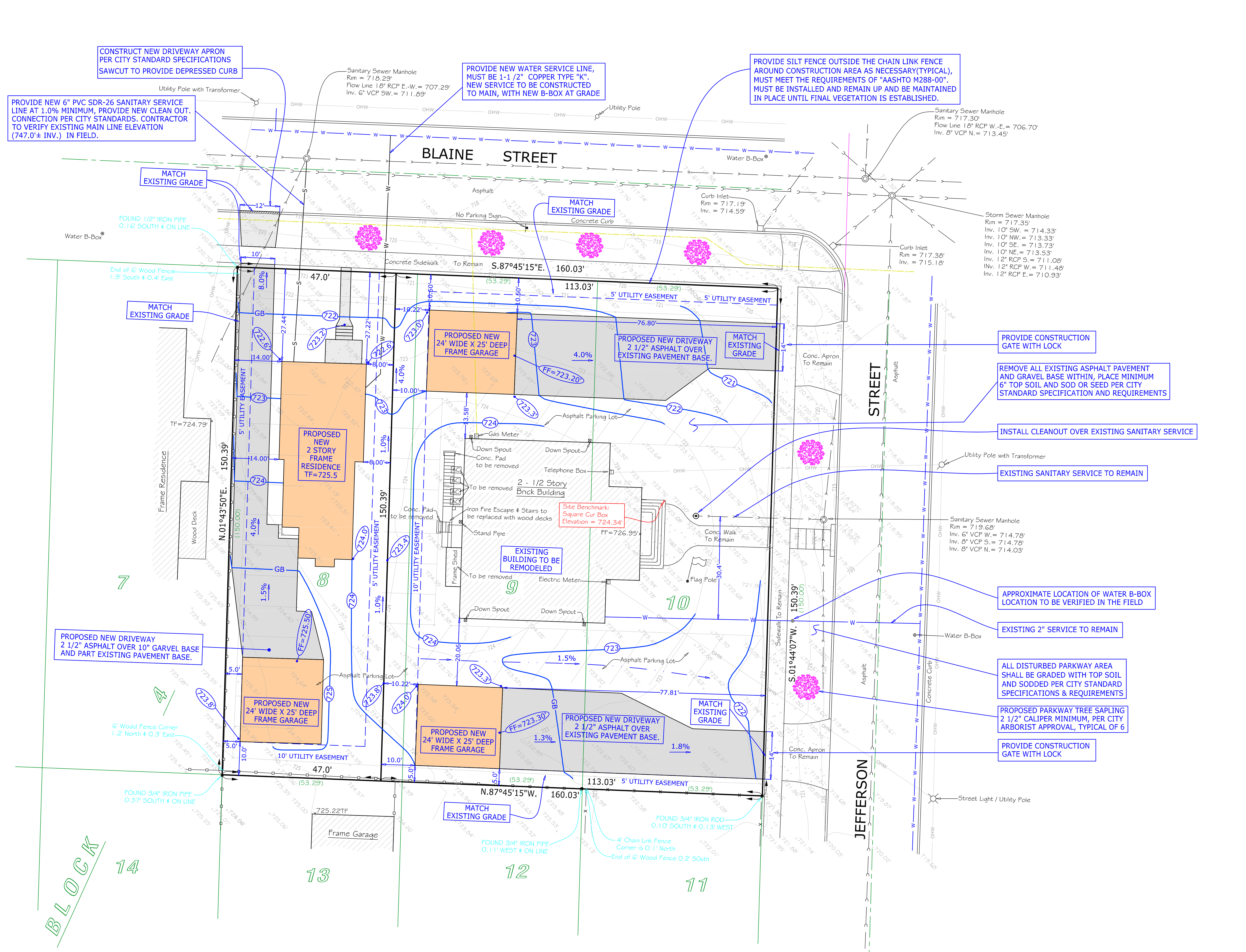

© COPYRIGHT 2013-2015, ASM CONSULTANTS, INC. ALL RIGHTS RESERVED.

SOURCE BENCHMARK:

NGS Monument
DESIGNATION - W 19
PID - MF0016
STATE / COUNTY - IL / KANE
USGS QUAD - AURORA NORTH (1993)

ELEVATION = 717.73' (NAVD 88)

SITE BENCHMARK:

SQUARE CUT ON TOP OF NORTHEAST CONCRETE CORNER OF SUBJECT PROPERTY'S EXISTING 2 1/2 STORY BRICK BUILDING MAIN ENTRANCE STEPS (SEE PLAN).

ELEVATION = 724.34'

PREPARED BY:

ASM Consultants, Inc.
16 E Wilson St, Batavia IL 60510
Tel (630) 879-0200 Fax (630) 454-3774
advanced@advct.com
Professional Design Firm #184-006014 expires 4/30/2017

UTILITY DISCONNECT NOTES:

1. EXISTING SANITARY AND WATER SERVICES SHALL BE REMOVED AND PROPERLY CAPPED AT THEIR RESPECTIVE MAINS.
2. CONTRACTOR TO VERIFY WATER SERVICE LINE IN FIELD, SERVICE LINE MUST BE 1-1 /2" COPPER TYPE "K". EXISTING SERVICE LINES MUST BE DISCONNECTED AT MAIN, AND NEW SERVICE TO BE CONSTRUCTED TO MAIN.

GENERAL NOTES:

1. THE CONTRACTOR TO CALL J.U.L.I.E. PRIOR TO COMMENCING CONSTRUCTION.
2. ALL WORK SHALL BE CONFORM WITH CITY STANDARD SPECIFICATIONS AND ORDINANCES.
2. ANY DAMAGED PORTIONS OF THE PUBLIC STREETS PAVEMENT SHALL BE RESTORED TO MATCH EXISTING OR APPROVED BY THE CITY ENGINEER.
3. ALL DISTURBED PARKWAY LAWN AREAS WITHIN THE PUBLIC RIGHT-OF- WAY WILL BE RESTORED WITH 6" OF PULVERIZED TOPSOIL/SOD AND WATERED AS REQUIRED TO SUSTAIN GROWTH.
4. ANY OPEN EXCAVATIONS WITH THE PUBLIC RIGHT-OF-WAY OR ANY EASEMENTS SHALL BE WATER JETTED PRIOR TO FINAL RESTORATION.
5. THE TOP OF EACH WINDOW WELL WILL BE A MINIMUM SIX INCHES (6") ABOVE ADJACENT GROUND ELEVATIONS.
6. ALL DOWN SPOUTS MUST BE DIRECTED TO THE BACK AND FRONT OF THE PROPERTY OR AS SHOWN ON PLAN.
7. WATER PUMPED, OR OTHERWISE DISCHARGED, FROM THE SITE AS PART OF CONSTRUCTION DEWATERING SHALL BE FILTERED.
8. ALL SOIL, MUD AND DEBRIS WASHED, TRACKED OR DEPOSIT ONTO THE STREET PAVEMENT SHALL BE REMOVED AT THE END OF EACH WORK DAY.
9. THE SILT FENCE SHOULD BE CONSTRUCTED OUTSIDE THE CHAIN LINK FENCE AND BOTH MUST REMAIN IN PLACE UNTIL FINAL GRADE OF THE SITE.

NOTES:

REFER TO ARCHITECTURAL PLAN FOR BUILDING DETAILS AND DIMENSIONS

SEDIMENTATION AND EROSION CONTROL NOTES

A. ALL EROSION CONTROL MEASURES SHALL BE IN ACCORDANCE WITH THE PROCEDURES AND STANDARDS FOR URBAN SOIL EROSION AND SEDIMENTATION CONTROL AND THE DUPAGE COUNTY STORMWATER MANAGEMENT COMMISSION'S TECHNICAL REFERENCE MANUAL.

B. SOIL DISTURBANCE SHALL BE CONDUCTED IN SUCH A MANNER AS TO MINIMIZE EROSION. SOIL STABILIZATION MEASURES SHALL CONSIDER THE TIME OF YEAR, SITE CONDITIONS, AND THE USE OF TEMPORARY OR PERMANENT MEASURES.

C. SOIL EROSION AND SEDIMENT CONTROL FEATURES SHALL BE CONSTRUCTED PRIOR TO THE COMMENCEMENT OF UPLAND DISTURBANCE.

D. TEMPORARY SOIL STABILIZATION SHALL BE APPLIED TO DISTURBED AREAS WITHIN 14 CALENDAR DAYS OF THE END OF ACTIVE HYDROLOGIC DISTURBANCE. PERMANENT STABILIZATION SHALL BE DONE WITHIN 14 DAYS AFTER COMPLETION OF THE FINAL GRADING OF THE SOIL.

E. ALL STORM SEWER FACILITIES THAT ARE OR WILL BE FUNCTIONING DURING THE CONSTRUCTION SHALL BE PROTECTED, FILTERED, OR OTHERWISE TREATED TO REMOVE SEDIMENT.

F. ALL TEMPORARY EROSION AND SEDIMENT CONTROL MEASURED SHALL BE REMOVED WITHIN 30 DAYS AFTER FINAL SITE STABILIZATION IS ACHIEVED OR AFTER TEMPORARY MEASURES ARE NO LONGER NEEDED. TRAPPED SEDIMENT AND OTHER DISTURBED SOIL AREA SHALL BE PERMANENTLY STABILIZED.

G. ALL TEMPORARY AND PERMANENT EROSION CONTROL MEASURES MUST BE MAINTAINED AND REPAIRED AS NEEDED. THE GENERAL CONTRACTOR WILL BE RESPONSIBLE FOR INSPECTION AND REPAIR DURING CONSTRUCTION. THE OWNER WILL BE RESPONSIBLE IF EROSION CONTROL IS REQUIRED AFTER THE CONTRACTOR HAS COMPLETED THE PROJECT.

H. THE EROSION CONTROL MEASURES INDICATED ON PLANS ARE THE MINIMUM REQUIREMENTS. ADDITION MEASURES MAY BE REQUIRED, AS DIRECTED BY THE ENGINEER OR GOVERNING AGENCY.

I. THE EROSION CONTROL FENCE MUST BE INSTALLED PRIOR TO ANY WORK ON SITE. THE FENCE MUST REMAIN UP AND BE MAINTAINED AND IN PLACE UNTIL FINAL VEGETATION IS ESTABLISHED. WE RECOMMEND THAT THE EROSION CONTROL FENCE BE INSTALLED OUTSIDE THE REQUIRED CHAIN LINK FENCING AS IT TENDS TO REMAIN IN PLACE.

EXISTING		PROPOSED	
EXISTING BUILDING (FOOTING)	2563 SQ. FT.	EXISTING BUILDING (FOOTING)	2563 SQ. FT.
SHED (FOOTING)	52 SQ. FT.	PROPOSED BUILDING	1302 SQ. FT.
CONCRETE WALK & STAIRS	320 SQ. FT.	(3) GARAGE FOOTINGS	1800 SQ. FT.
ASPHALT PAVEMENT AREA	18,384 SQ. FT.	(3) ASPHALT DRIVEWAYS	4810 SQ. FT.
		CONCRETE WALK & STEPS	459 SQ. FT.
TOTAL IMPERVIOUS	21,319 SQ. FT.	TOTAL IMPERVIOUS	10,934 SQ. FT.

IMPERVIOUS AREA
(PROPOSED) 10,934 SQ. FT. - (EXISTING) 21,319 SQ. FT. = -10,385 SQ. FT. NET DECREASED
TOTAL LOT AREA 24,066.6 SQ. FT.
TOTAL PROPOSED IMPERVIOUS 10,934 SQ. FT. = 45% OF TOTAL LOT AREA

TOPOGRAPHIC SURVEY AND SITE GRADING PLAN

LEGAL DESCRIPTION

LOTS 8, 9 AND 10, BLOCK 4 IN JONES & ANDERSON BRO'S 2ND ADDITION TO BATAVIA, KANE COUNTY, ILLINOIS.

COMMONLY KNOW AS: 607 S. JEFFERSON STREET, BATAVIA, ILLINOIS 60510

PIN.: 12-22-356-009

SURVEY NOTES

EASEMENTS AND SETBACKS SHOWN HEREON ARE BASED UPON THE RECORDED SUBDIVISION PLAT UNLESS NOTED OTHERWISE.

ALL BUILDING TIES ARE TO BRICK AND/OR SIDING CORNERS.

THE FLOOD INSURANCE RATE MAP SHOWS THE PROPERTY DESCRIBED HEREON AS FALLING WITHIN ZONE " X", ACCORDING TO COMMUNITY PANEL NO. 170197 0803 H, DuPAGE COUNTY, FOUND ON FIRM MAP NO. 17043C0706H, DuPAGE COUNTY, ILLINOIS AND INCORPORATED AREAS, WITH AN EFFECTIVE DATE OF DECEMBER 16, 2004.
ZONE: "X" ARE AREAS DETERMINED TO BE OUTSIDE THE 0.2% ANNUAL CHANCE FLOODPLAIN.

A CURRENT TITLE REPORT WAS NOT FURNISHED TO US FOR OUR USE IN PREPARING THIS SURVEY. THEREFORE THERE MAY BE ADDITIONAL EASEMENTS AND/OR SERVITUDES EFFECTING THIS PROPERTY WHICH ARE NOT SHOWN ON THIS SURVEY.

SURVEYOR'S CERTIFICATE

STATE OF ILLINOIS } SS
COUNTY OF KANE }

I, CHARLES S. MARSHALL, AN ILLINOIS PROFESSIONAL LAND SURVEYOR, DO HEREBY CERTIFY THAT THE PLAT SHOWN HEREON, BEING COMPLETED IN THE FIELD ON 9/3/2016, IS A CORRECT REPRESENTATION OF A SURVEY PERFORMED AT AND UNDER MY DIRECTION.

THIS SURVEY MEETS THE MINIMUM TECHNICAL STANDARDS FOR LAND BOUNDARY AND TOPOGRAPHIC SURVEYS SET FORTH BY ILLINOIS STATE LAW.

ALL DIMENSIONS ARE IN FEET AND DECIMAL PARTS THEREOF.

GIVEN UNDER MY HAND AND SEAL THIS 6TH DAY OF SEPTEMBER, A.D. 2016.

PRELIMINARY

CHARLES S. MARSHALL
ILLINOIS PROFESSIONAL LAND SURVEYOR NO. 035-3377
LICENSE EXPIRES 11/30/2016

PREPARED FOR:

Spillane & Sons, Inc.
253 Trudy Court
Batavia, IL 60510

NO.	DATE	REVISION
1.	9/3/2016	FIELD SURVEY COMPLETED
2.	9/6/2016	PRELIMINARY SITE PLAN COMPLETED

SITE DESIGNATION INFORMATION:

BLAINE ST SCHOOL
607 S JEFFERSON ST
BATAVIA, IL 60510

DRAWN BY: PS | CHECKED BY: CSM

PROJECT NO.
387001

SITE PLAN
SP-1

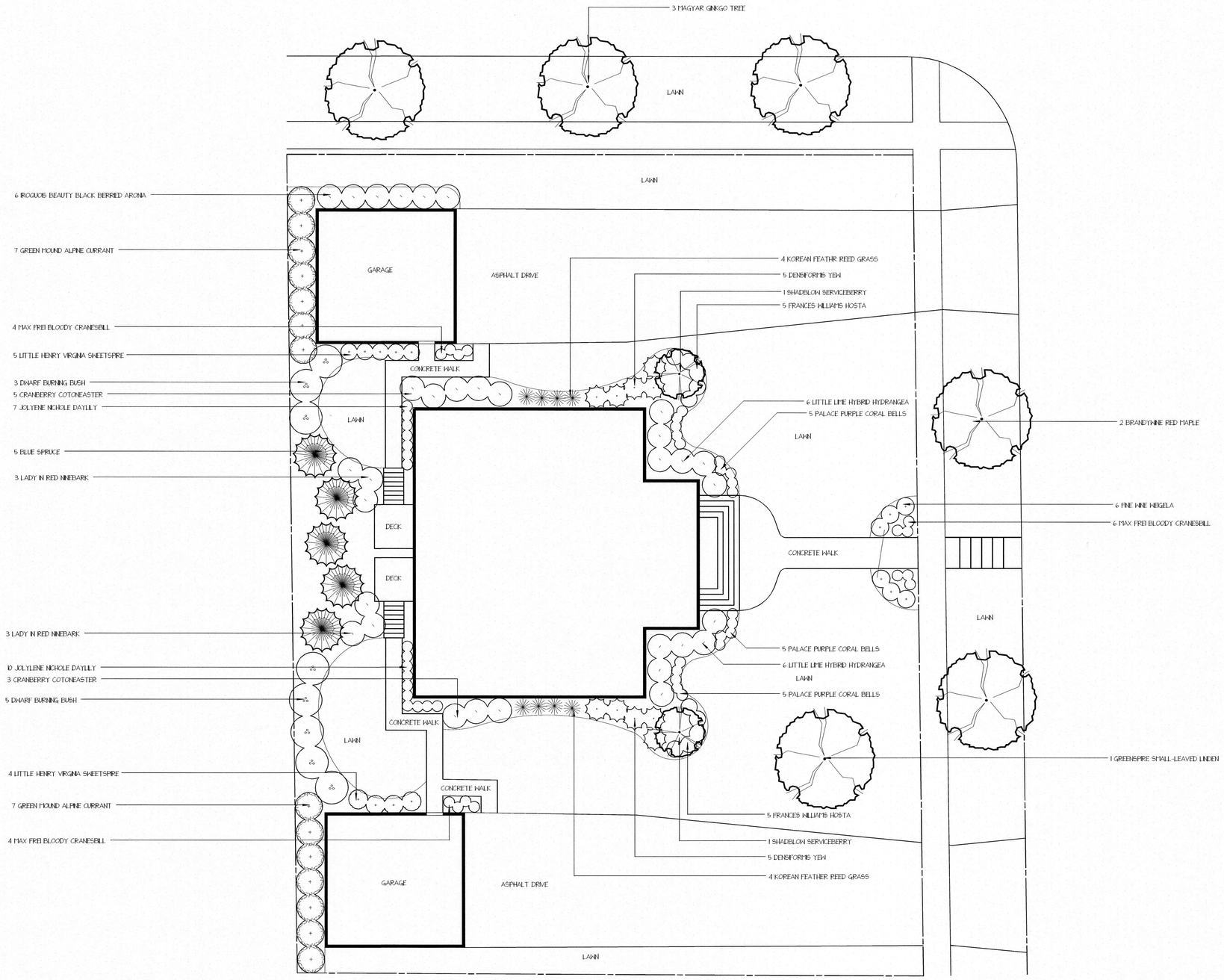

NOTES

N

No.	Date	Description

REVISIONS

PROJECT LOCATION

607 S. JEFFERSON STREET
BATAVIA, ILLINOIS 60510

0 5 10 20 30

SCALE IN FEET

1" = 10'-0"

SPILLANE & SONS
BUILDING AND REMODELING
BATAVIA, ILLINOIS
630.688.4479
MICKEYSPILLANE@COMCAST.NET
SPILLANEANDSONS.COM

SCALE	1" = 10'-0"
DRAWN BY	S FLYNN
CHECKED BY	M SPILLANE
DATE	
DATE OF PRINT	10/24/2016

PROJECT NO.	1 OF 1
SHEET NO.	

Powered by DynaCAPP

2 All

SOUTH ELEVATION - NEW

SCALE: 1/4" = 1'-0"

1 All

EAST ELEVATION - NEW

SCALE: 1/4" = 1'-0"

EXISTING MASONRY OPENING NOTE:
VERIFY THE DIMENSIONS OF ALL EXISTING MASONRY OPENINGS IN THE FIELD PRIOR TO ORDERING ANY NEW WINDOW OR DOOR UNITS. VERIFY ALL EXISTING CONDITIONS IN THE FIELD.

Gregory A. Norris Architect

437 South Van Buren Street
Batavia, IL 60510-2751
630 - 336- 4368
ganarchitect@aol.com
IL License No.: 001-011764

CONVERSION OF THE BLAINE STREET SCHOOL TO TOWNHOME UNITS

Project Location:
607 S Jefferson St
Batavia, IL 60510

General Contractor:
Spillane & Son's Buildng and Remodeling
253 Trudy Court
Batavia, IL 60510
ph: 630-688-4479
fax: 630-879-6218

REVISIONS

For Permit ~ Sept 30, 2016

Gregory A. Norris, Architect
© 2016, All Rights Reserved

ISSUE DATE: September 30, 2016
DRAWN BY: GAN
FILENAME: Blaine St CD's
GAN JOB No.: GAN 2016-20

NEW EAST AND SOUTH ELEVATIONS

SHEET NO.: A-11 OF 15

2 A12 NORTH ELEVATION - NEW

SCALE: 1/4" = 1'-0"

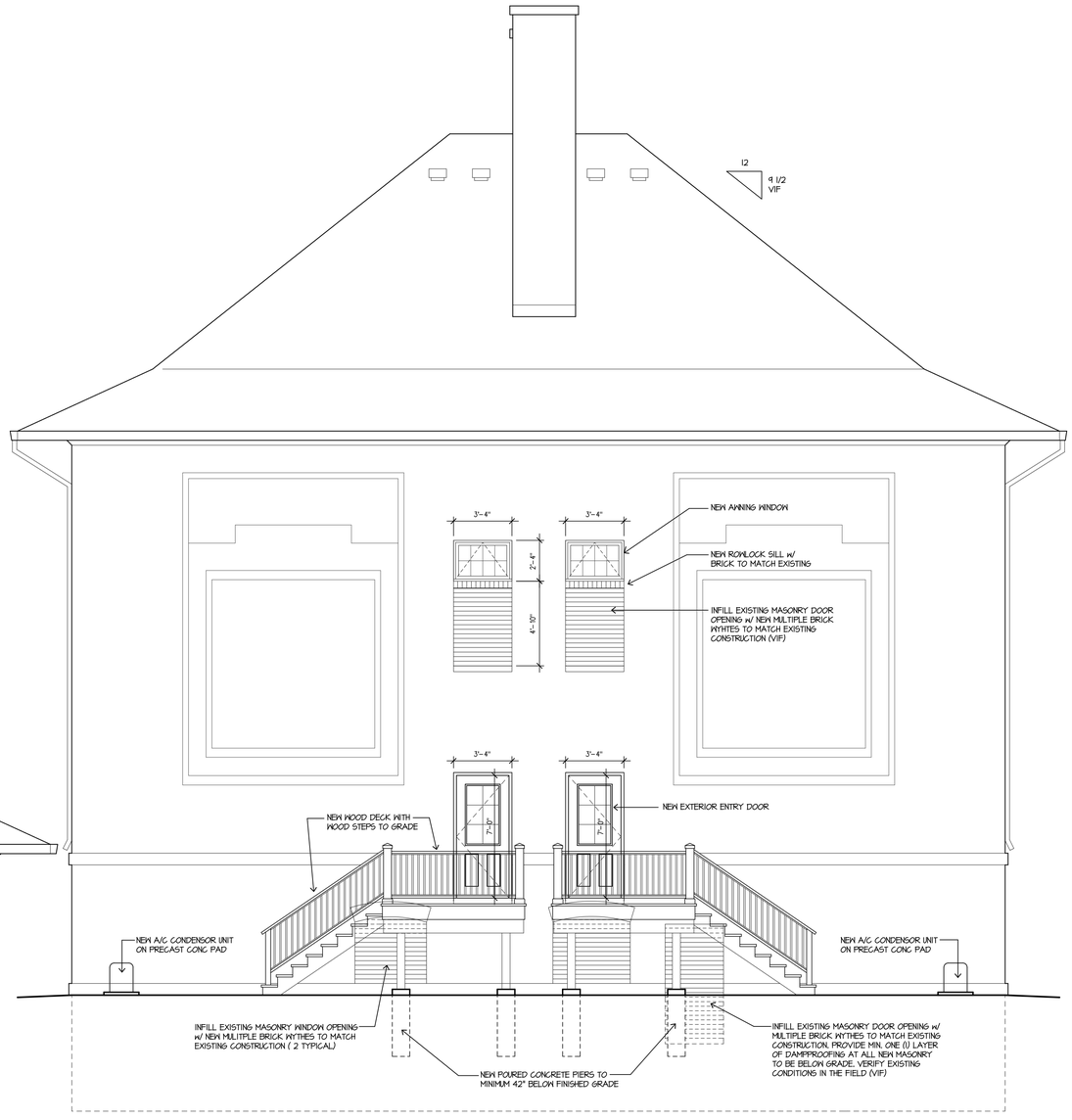

1 A12 WEST ELEVATION - NEW

SCALE: 1/4" = 1'-0"

EXISTING MASONRY OPENING NOTE:
VERIFY THE DIMENSIONS OF ALL EXISTING MASONRY OPENINGS IN THE FIELD PRIOR TO ORDERING ANY NEW WINDOW OR DOOR UNITS. VERIFY ALL EXISTING CONDITIONS IN THE FIELD.

Gregory A. Norris Architect
437 South Van Buren Street
Batavia, IL 60510-2751
630 - 336- 4368
ganarchitect@aol.com
IL License No.: 001-011764

CONVERSION OF THE BLAINE STREET SCHOOL TO TOWNHOME UNITS

Project Location:
607 S Jefferson St
Batavia, IL 60510

General Contractor:
Spillane & Son's Buildng and Remodeling
253 Trudy Court
Batavia, IL 60510
ph: 630-688-4479
fax: 630-879-6218

REVISIONS
For Permit ~ Sept 30, 2016

Gregory A. Norris, Architect
© 2016, All Rights Reserved

ISSUE DATE: September 30, 2016
DRAWN BY: GAN
FILENAME: Blaine St CD's
GAN JOB No.: GAN 2016-20

NEW WEST AND NORTH ELEVATIONS

SHEET NO. : A-12 OF 15

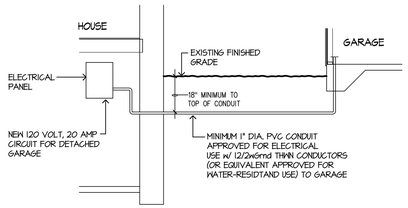

7 / A15 **ELEC'L FEEDER DETAIL**

NOT TO SCALE

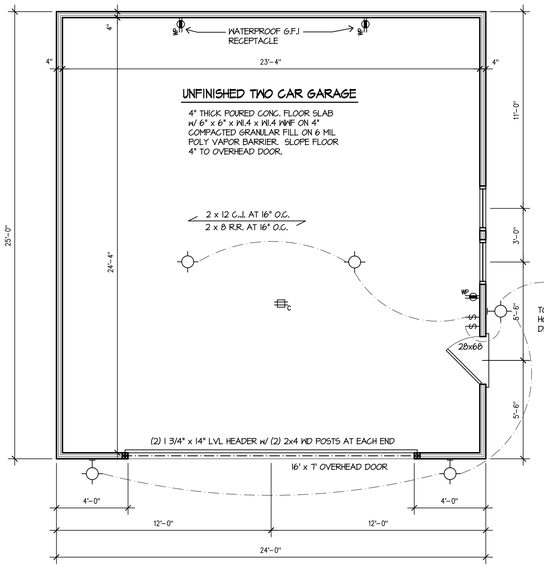

SOUTH UNIT GARAGE

2 / A15 **GARAGE PLAN**

SCALE: 1/4" = 1'-0"

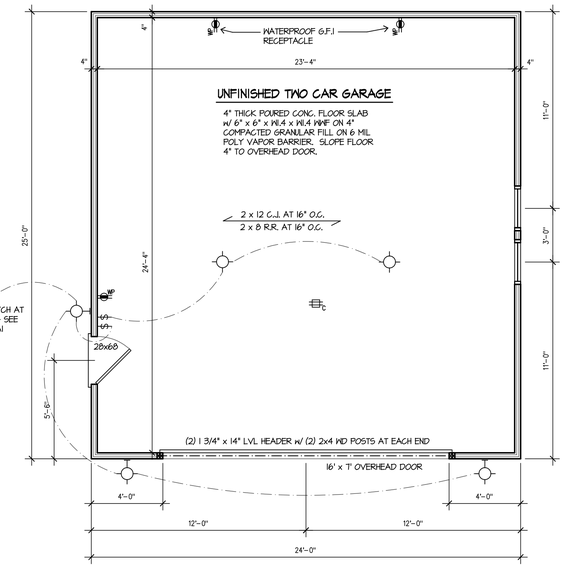

NORTH UNIT GARAGE

1 / A15 **GARAGE PLAN**

SCALE: 1/4" = 1'-0"

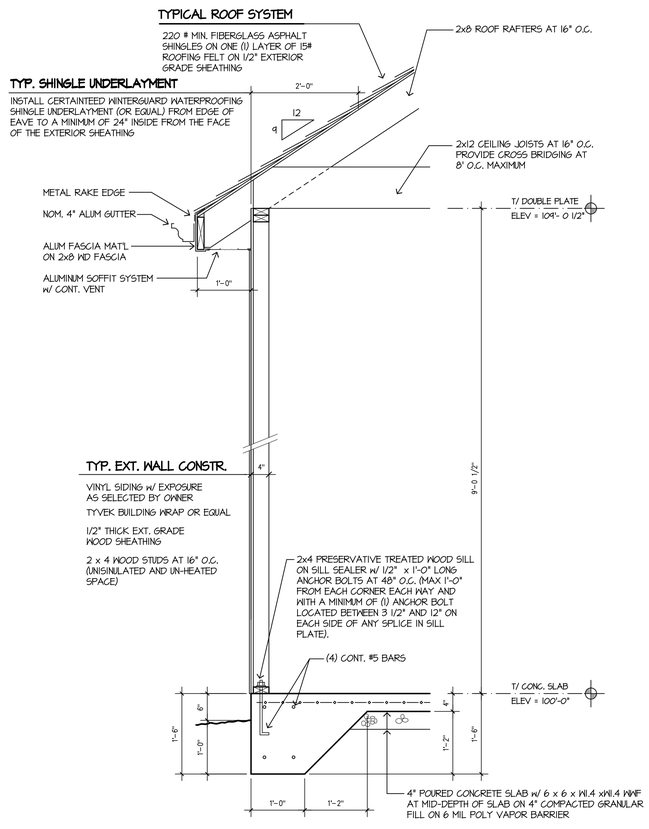

8 / A15 **GARAGE WALL SECTION**

SCALE: 3/4" = 1'-0"

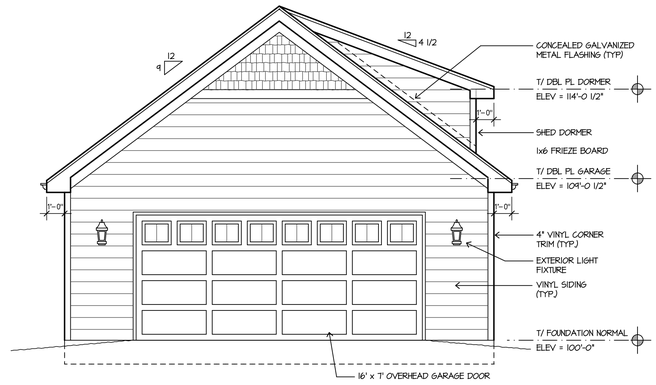

4 / A15 **FRONT ELEVATION**

SCALE: 1/4" = 1'-0"

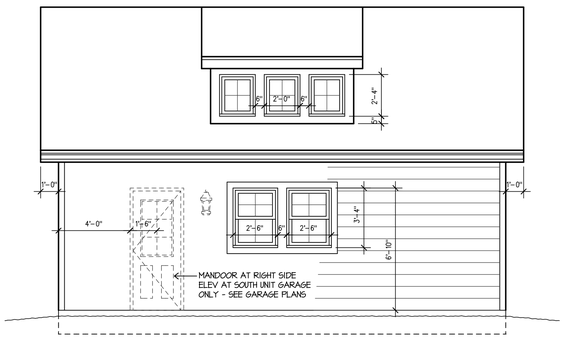

3 / A15 **RIGHT SIDE ELEVATION**

SCALE: 1/4" = 1'-0"

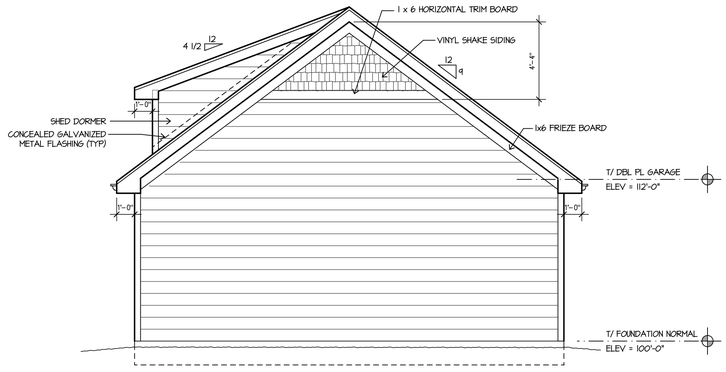

6 / A15 **REAR ELEVATION**

SCALE: 1/4" = 1'-0"

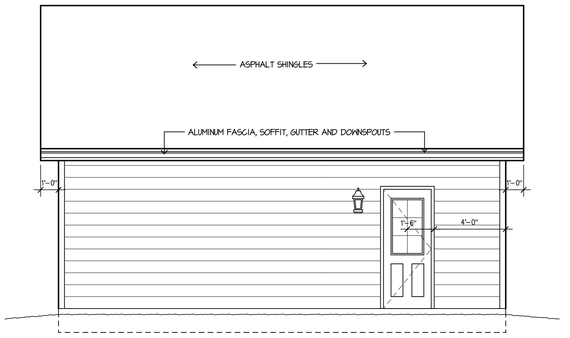

5 / A15 **LEFT SIDE ELEVATION**

SCALE: 1/4" = 1'-0"

Gregory A. Norris Architect

437 South Van Buren Street
Batavia, IL 60510-2751
630 - 336- 4368
ganarchitect@aol.com

IL License No.: 001-011764

CONVERSION OF THE BLAINE STREET SCHOOL TO TOWNHOME UNITS

Project Location:
607 S Jefferson St
Batavia, IL 60510

General Contractor:
Spillane & Son's Buildng and Remodeling
253 Trudy Court
Batavia, IL 60510
ph: 630-688-4479
fax: 630-879-6218

REVISIONS

For Permit ~ Sept 30, 2016

Gregory A. Norris, Architect
© 2016, All Rights Reserved

ISSUE DATE: September 30, 2016

DRAWN BY: GAN

FILENAME: Blaine St Garages

GAN JOB No.: GAN 2016-20

DETACHED GARAGE PLANS, ELEVATIONS AND DETAILS

SHEET NO. : A-15 OF 15

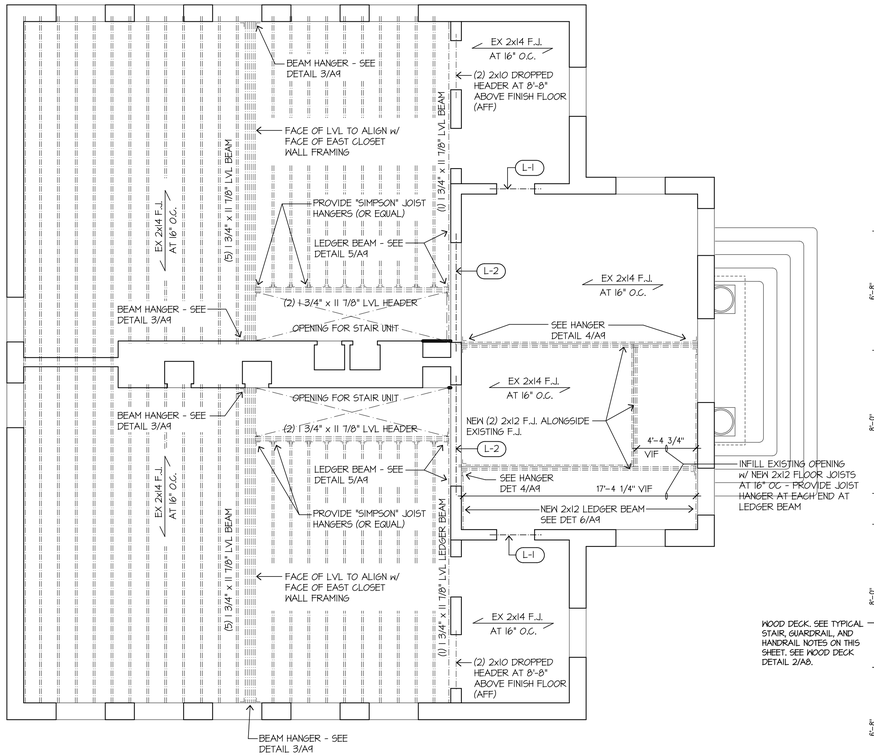

2 / A9 FIRST FLOOR - STRUCTURAL PLAN

SCALE: 3/16" = 1'-0"

LINTEL SCHEDULE			
MARK	DESCRIPTION	BEARING	TYPE
L-1	(2) STEEL ANGLES 3 1/2 x 3 1/2 x 3/8" B/ LINTEL TO BE 8'-8" AFF	8" EACH END	⊥⊥
L-2	(2) STEEL ANGLES 6 x 3 1/2 x 3/8" LLV B/ LINTEL TO BE 8'-8" AFF	8" EACH END	⊥⊥

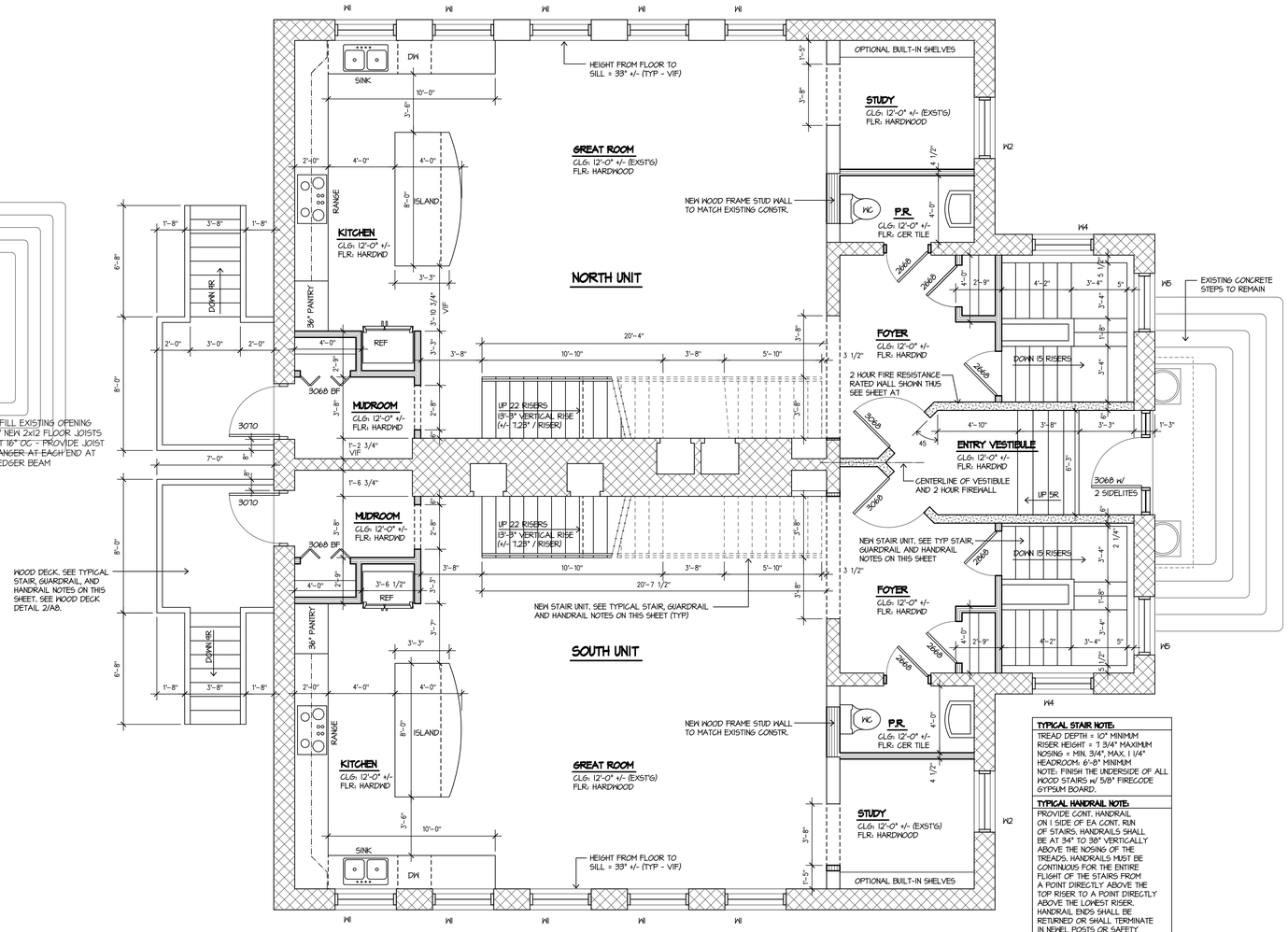

1 / A9 FIRST FLOOR - NEW PLAN

SCALE: 1/4" = 1'-0"

TYPICAL STAIR NOTE:
TREAD DEPTH = 10" MINIMUM
RISER HEIGHT = 7 3/4" MAXIMUM
NOSING = MIN. 3/4", MAX. 1 1/4"
HEADROOM: 6'-8" MINIMUM
NOTE: FINISH THE UNDERSIDE OF ALL WOOD STAIRS w/ 5/8" FIRECODE GYPSUM BOARD.

TYPICAL HANDRAIL NOTE:
PROVIDE CONT. HANDRAIL ON 1 SIDE OF EA CONT. RUN OF STAIRS. HANDRAILS SHALL BE AT 34" TO 38" VERTICALLY ABOVE THE NOSING OF THE TREADS. HANDRAILS MUST BE CONTINUOUS FOR THE ENTIRE FLIGHT OF THE STAIRS FROM A POINT DIRECTLY ABOVE THE TOP RISER TO A POINT DIRECTLY ABOVE THE LOWEST RISER. HANDRAIL ENDS SHALL BE RETURNED OR SHALL TERMINATE IN NEWEL POSTS OR SAFETY TERMINALS PER THE 2006 IRC SECTION R311.5.6.

TYPICAL GUARDRAIL NOTE
PROVIDE GUARDRAILS AT ALL PORCHES, BALCONIES, OR SIMILAR RAISED FLOORS THAT ARE LOCATED MORE THAN 30" ABOVE THE FLOOR OR GRADE BELOW. GUARDRAILS SHALL BE 36" IN HEIGHT AND HAVE INTERMEDIATE RAILS THAT DO NOT ALLOW THE PASSAGE OF A 4" DIAMETER SPHERE. ALL GUARDRAILS SHALL COMPLY WITH THE 2006 IRC SECTIONS R312.1 AND R312.2.

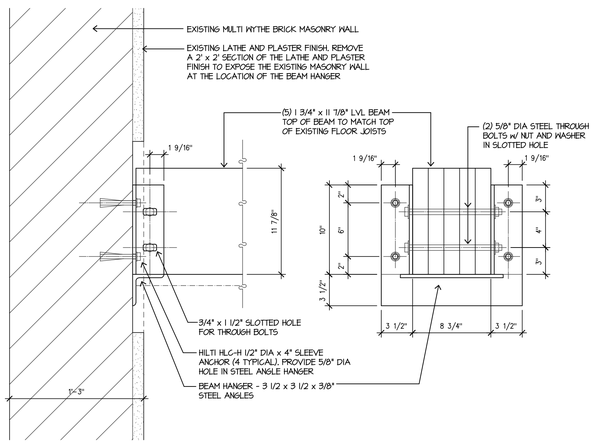

3 / A9 BEAM HANGER DETAIL

SCALE: 1 1/2" = 1'-0"

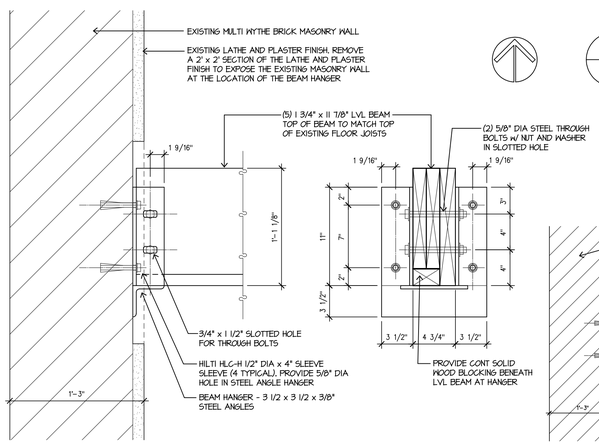

4 / A9 BEAM HANGER DETAIL

SCALE: 1 1/2" = 1'-0"

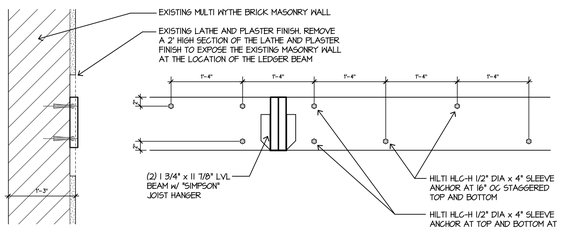

5 / A9 LEDGER BEAM DETAIL

SCALE: 3/4" = 1'-0"

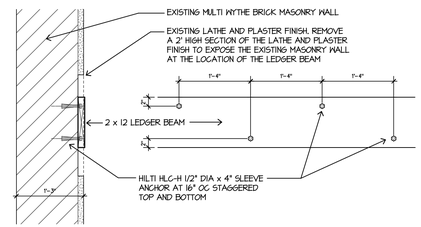

6 / A9 LEDGER BEAM DETAIL

SCALE: 3/4" = 1'-0"

Gregory A. Norris Architect
437 South Van Buren Street
Batavia, IL 60510-2751
630 - 336- 4368
ganarchitect@aol.com
IL License No.: 001-011764

CONVERSION OF THE BLAINE STREET SCHOOL TO TOWNHOME UNITS

Project Location:
607 S Jefferson St
Batavia, IL 60510

General Contractor:
Spillane & Son's Buildng and Remodeling
253 Trudy Court
Batavia, IL 60510
ph: 630-688-4479
fax: 630-879-6218

REVISIONS
For Permit ~ Sept 30, 2016

Gregory A. Norris, Architect
© 2016, All Rights Reserved

ISSUE DATE: September 30, 2016
DRAWN BY: GAN
FILENAME: Blaine St CD's
GAN JOB No.: GAN 2016-20

NEW FIRST FLOOR PLAN, 1ST FLOOR STRUCTURAL PLAN AND BEAM DETAILS

SHEET NO. : A-9 OF 15

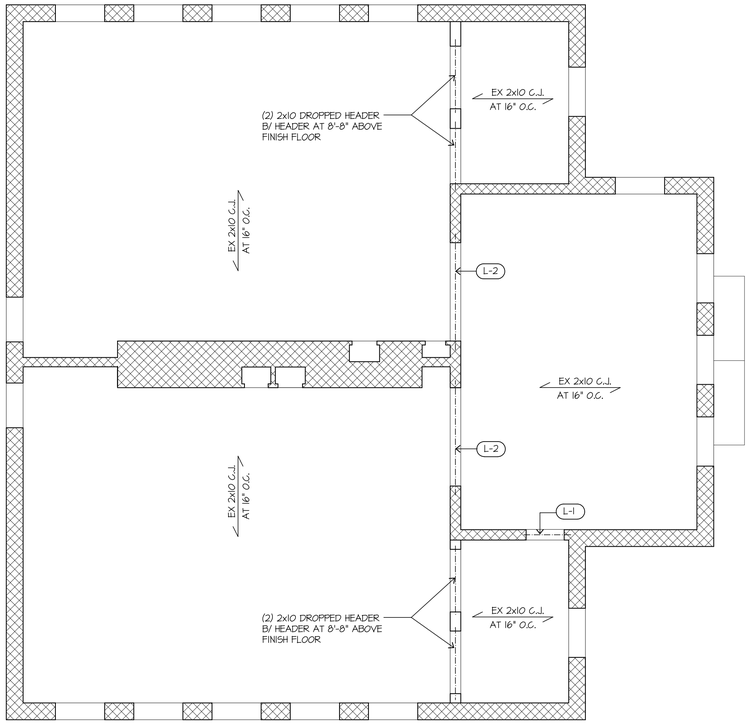

2 A10 SECOND FLOOR - STRUCTURAL PLAN

SCALE: 3/16" = 1'-0"

LINTEL SCHEDULE			
MARK	DESCRIPTION	BEARING	TYPE
L-1	(2) STEEL ANGLES 3 1/2 x 3 1/2 x 3/8" B/ LINTEL TO BE 8'-8" AFF	8" EACH END	⊥⊥
L-2	(2) STEEL ANGLES 6 x 3 1/2 x 3/8" LLV B/ LINTEL TO BE 8'-8" AFF	8" EACH END	⊥L

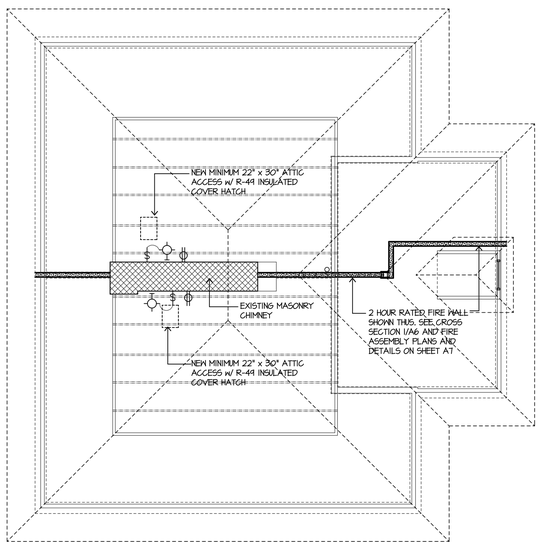

3 A10 ATTIC - NEW PLAN

SCALE: 1/8" = 1'-0"

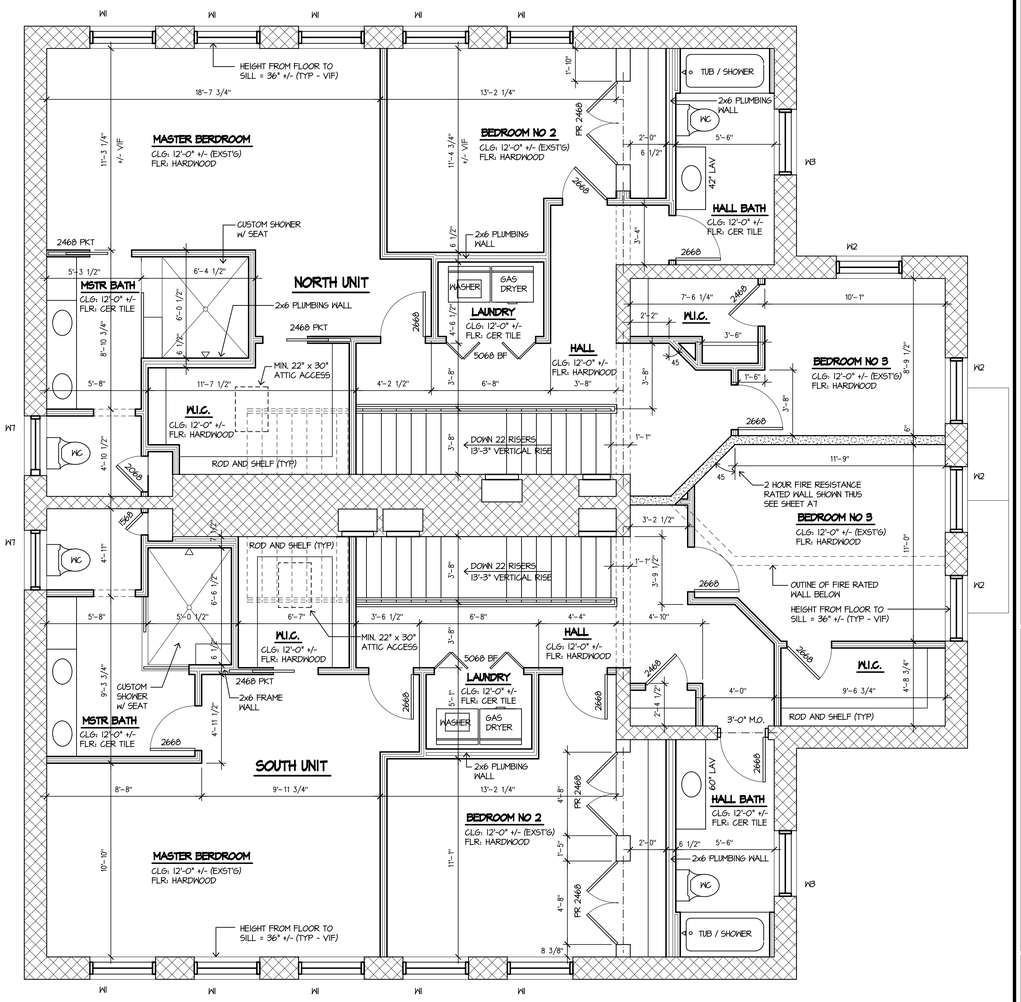

1 A10 SECOND FLOOR - NEW PLAN

SCALE: 1/4" = 1'-0"

Gregory A. Norris Architect
437 South Van Buren Street
Batavia, IL 60510-2751
630 - 336- 4368
ganarchitect@aol.com
IL License No.: 001-011764

CONVERSION OF THE BLAINE STREET SCHOOL TO TOWNHOME UNITS

Project Location:
607 S Jefferson St
Batavia, IL 60510

General Contractor:
Spillane & Son's Buildng and Remodeling
253 Trudy Court
Batavia, IL 60510
ph: 630-688-4479
fax: 630-879-6218

REVISIONS
For Permit ~ Sept 30, 2016

Gregory A. Norris, Architect
© 2016, All Rights Reserved

ISSUE DATE: September 30, 2016
DRAWN BY: GAN
FILENAME: Blaine St CD's
GAN JOB No.: GAN 2016-20

NEW SECOND FLOOR PLAN, 2ND FLOOR STRUCTURAL PLAN & NEW ATTIC PLAN

SHEET NO. :
A-10 OF 15