F.A.U. RTE.	SECTION	COUNTY	TOTAL SHEETS	SHEET NO.
2327	07-00068-00-BR	KANE	78	1
		ILLINOIS	CONTRACT NO. 61A88	

STATE OF ILLINOIS

DEPARTMENT OF TRANSPORTATION

DIVISION OF HIGHWAYS

PLANS FOR PROPOSED FEDERAL AID HIGHWAY

FOR INDEX OF SHEETS, SEE SHEET NO. 2

F.A.U. ROUTE 2327 (DEERPATH ROAD) SAUPP DRIVE (FORMERLY LIMESTONE DRIVE) TO MAIN STREET BRIDGE REPLACEMENT SECTION 07–00068–00–BR PROJECT BRM–9003(276) CITY OF BATAVIA KANE COUNTY

C–91–479–09

LOCATION OF SECTION INDICATED THUS:– ■

DESIGN SPEED

DEERPATH ROAD – 35 MPH

POSTED SPEED

DEERPATH ROAD – 30 MPH

DESIGN DESIGNATIONS

DEERPATH ROAD – 3,300 (2015) COLLECTOR 0.19 (HMA–20)

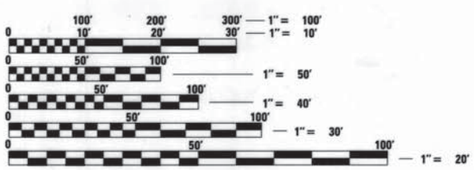

FULL SIZE PLANS HAVE BEEN PREPARED USING STANDARD ENGINEERING SCALES. REDUCED SIZED PLANS WILL NOT CONFORM TO STANDARD SCALES. IN MAKING MEASUREMENTS ON REDUCED PLANS, THE ABOVE SCALES MAY BE USED.

J.U.L.I.E.
JOINT UTILITY LOCATION INFORMATION FOR EXCAVATION
1–800–892–0123
OR 811

LOCATION MAP
(NOT TO SCALE)

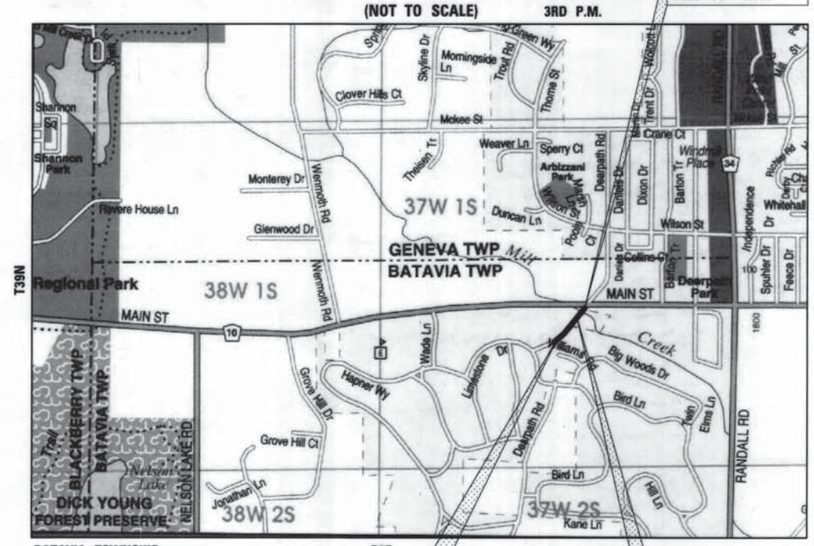

GROSS LENGTH = 560 FT. = 0.106 MILE

NET LENGTH = 560 FT. = 0.106 MILE

DEREK N. MALL 062-051308 LICENSED PROFESSIONAL ENGINEER OF ILLINOIS

10/12/15

REGISTERED P.E., STATE OF ILLINOIS
NO. 062–051308; EXPIRES 11–30–2017
APPLIES TO SHEETS 1 TO 38 AND 54 TO 78.

STATE OF ILLINOIS GREGORY J. RATLIFF/AD 081-005562 CIVILTECH ENGINEERING, INC. STRUCTURAL

10/9/15

REGISTERED S.E., STATE OF ILLINOIS
NO. 081–005562; EXPIRES 11–30–2016
APPLIES TO SHEETS 39 TO 53.

CIVILTECH ENGINEERING, INC. 184-000826 LS/PE/SE CORPORATION ILLINOIS

PLANS PREPARED BY:

CIVILTECH
450 E. Devon Ave, Suite 300 - Itasca, Illinois 60143
Tel: 630.773.3900 - Fax: 630.773.3975
www.civiltechinc.com

STATE OF ILLINOIS
DEPARTMENT OF TRANSPORTATION
DIVISION OF HIGHWAYS

APPROVED 10/12/20 15
RAHAT BARI, P.E.
CITY ENGINEER, CITY OF BATAVIA

PASSED _____ 20 ____

DISTRICT ONE ENGINEER OF LOCAL ROADS AND STREETS

RELEASING FOR BID BASED ON LIMITED REVIEW _____ 20 ____

DEPUTY DIRECTOR OF HIGHWAYS, REGION ONE ENGINEER

PRINTED BY THE AUTHORITY OF THE STATE OF ILLINOIS

FEDERAL AID PROGRAM ENGINEER: FAWAD AQUEEL, P.E. (847) 705–4021 SCHAUMBURG, IL

CONTRACT NO. 61A88

PLOT DRIVER = ...\vsgn\dms80314\cen.pdf.plt
PEN TABLE = ...\pentbl\cen.idot.general.tbl
FILE NAME = ...\2637-sht-cover.dgn

SPECIFICATIONS, STANDARDS AND SPECIAL PROVISIONS

1. ALL CONSTRUCTION SHALL BE IN ACCORDANCE WITH THE "STANDARD SPECIFICATIONS FOR ROAD AND BRIDGE CONSTRUCTION" ("STANDARD SPECIFICATIONS"), ADOPTED JANUARY 1, 2012; THE "SUPPLEMENTAL SPECIFICATIONS AND RECURRING SPECIAL PROVISIONS", ADOPTED JANUARY 1, 2015; THE LATEST EDITION OF THE "ILLINOIS MANUAL ON UNIFORM TRAFFIC CONTROL DEVICES FOR STREETS AND HIGHWAYS" (IMUTCD); THE "STANDARD SPECIFICATIONS FOR WATER AND SEWER CONSTRUCTION IN ILLINOIS", 7TH EDITION, 2014; THE LATEST EDITION OF THE "ILLINOIS URBAN MANUAL"; THE DETAILS IN THE PLANS; AND THE SPECIAL PROVISIONS AND IDOT STANDARD DRAWINGS INCLUDED IN THE CONTRACT DOCUMENTS.

2. ALL REFERENCES TO "ENGINEER" SHALL BE INTERPRETED AS THE RESIDENT ENGINEER.

3. ALL UTILITY COMPANIES, SCHOOL DISTRICTS, AND LOCAL POLICE AND FIRE DEPARTMENTS SHALL BE NOTIFIED BY THE CONTRACTOR AT LEAST 72 HOURS PRIOR TO THE START OF CONSTRUCTION.

STAKING

1. ALL RADII FOR PROPOSED CURB AND GUTTER ARE TO THE EDGE OF PAVEMENT UNLESS OTHERWISE NOTED.

2. THE STATION/OFFSET/ELEVATIONS NOTED FOR ALL DRAINAGE STRUCTURES LOCATED IN THE CURB LINE REFER TO THE POSITION OF THE ADJACENT EDGE OF PAVEMENT. THE CONTRACTOR SHALL BE RESPONSIBLE FOR DETERMINING THE OFFSET NECESSARY FOR EACH STRUCTURE TO SET THE FRAME AND GRATE IN THE PROPER LOCATION. ALL OTHER STRUCTURES ARE DIMENSIONED TO THE CENTER OF STRUCTURE, UNLESS OTHERWISE NOTED.

3. PAVEMENT GRADES: THE ELEVATIONS INDICATED ON THE PLANS ARE FINISHED GRADES OF PROPOSED PAVEMENT, UNLESS OTHERWISE INDICATED.

4. THE CONSTRUCTION BASELINE HAS BEEN ESTABLISHED FOR STAKING PURPOSES ONLY AND IS NOT INTENDED TO BE A CENTERLINE OF RIGHT-OF-WAY.

5. THE CONTRACTOR SHALL PROTECT AND CAREFULLY PRESERVE ALL SECTION OR SUBSECTION MONUMENTS OR PROPERTY OR REFERENCE MARKERS UNTIL THE CITY, ITS AGENT OR AN AUTHORIZED SURVEYOR HAS WITNESSED OR OTHERWISE REFERENCED THEIR LOCATIONS.

PAVING AND CURB & GUTTER

1. THE CONTRACTOR SHALL SAW CUT PAVEMENT, CURB & GUTTER, MEDIAN AND SIDEWALK AS INDICATED ON THE PLANS TO SEPARATE THE EXISTING MATERIAL TO BE REMOVED BY MEANS OF AN APPROVED SAW TO FULL DEPTH AS SHOWN ON THE PLANS OR AS DIRECTED BY THE ENGINEER. THIS WORK SHALL BE INCLUDED IN THE COST OF THE ITEM BEING REMOVED.

   THE CONTRACTOR SHALL BE REQUIRED TO SAW VERTICAL CUTS SO AS TO FORM CLEAN VERTICAL JOINTS. SHOULD THE CONTRACTOR DEFACE ANY EDGE, A NEW SAWED JOINT SHALL BE PROVIDED AND ANY ADDITIONAL WORK, INCLUDING REMOVAL AND REPLACEMENT, SHALL BE DONE AT THE CONTRACTOR'S EXPENSE.

2. BINDER COURSE SHALL NOT BE PLACED ADJACENT TO CURB AND GUTTER UNTIL THE CURB AND GUTTER HAS BEEN PROPERLY CURED AND BACKFILLED TO THE SATISFACTION OF THE ENGINEER.

3. HOT-MIX ASPHALT SURFACE COURSE SHALL NOT BE PLACED IN A STAGE UNTIL ALL EARTH EXCAVATION, TOPSOIL PLACEMENT, AND HOT-MIX ASPHALT BINDER COURSE WITHIN THE STAGE HAVE BEEN COMPLETED TO THE SATISFACTION OF THE ENGINEER.

4. THE THICKNESSES OF HOT-MIX ASPHALT MIXTURES SHOWN ON THE PLANS ARE NOMINAL. DEVIATIONS MAY OCCUR DUE TO IRREGULARITIES IN THE BINDER OR BASE UPON WHICH THE HOT-MIX ASPHALT MATERIALS ARE PLACED.

5. THE 6 INCH SIDE CURB ADJACENT TO SIDEWALK RAMPS SHALL BE INCLUDED IN THE MEASURED AREA AND PAID FOR AS "PORTLAND CEMENT CONCRETE SIDEWALK, 5 INCH". THE 6 INCH SIDE CURB SHALL BE IN ACCORDANCE WITH IDOT HIGHWAY STANDARDS 424001 & 424016.

6. THE FINAL EDGE-OF-PAVEMENT SURFACE ELEVATION SHALL BE 1/4" ABOVE THE GUTTER AS SHOWN IN IDOT STANDARD 606001 DETAIL FOR BOTH THE RESURFACING AND RECONSTRUCTION AREAS.

EXCAVATION

1. ALL EXCESS MATERIAL (BROKEN CONCRETE, SEWER PIPE, WASTE ROADWAY EXCAVATION AND SURPLUS MATERIAL FROM SEWER TRENCHES) SHALL BE LEGALLY DISPOSED OF OUTSIDE THE LIMITS OF THE RIGHT-OF-WAY. IT SHALL BE THE CONTRACTOR'S RESPONSIBILITY TO SELECT DUMP SITES AND OBTAIN PERMISSION AND ALL NECESSARY PERMITS TO USE SUCH DUMP SITES. THE COST OF THIS WORK SHALL BE INCLUDED IN THE COST OF THE REMOVAL ITEMS IN THE CONTRACT.

2. AGGREGATE SUBGRADE IMPROVEMENT HAS BEEN PROVIDED TO REPLACE SOILS WHICH TEND TO BE UNSTABLE WHEN WET. THE ACTUAL NEED FOR REMOVAL AND REPLACEMENT WITH AGGREGATE SUBGRADE IMPROVEMENT WILL BE DETERMINED IN THE FIELD AT THE TIME OF CONSTRUCTION BY THE ENGINEER. IF UNSUITABLE SOILS ARE ENCOUNTERED THE SOILS SHALL BE REMOVED AND REPLACED WITH AGGREGATE SUBGRADE IMPROVEMENT. THE REMOVAL AND REPLACEMENT AREA SHALL EXTEND TO 12 INCHES BEYOND THE CURB AND GUTTER AND COME UP AT A 1:1 SLOPE TO EXISTING GROUND SURFACE. THESE LIMITS MAY BE ALTERED BY THE ENGINEER IF FIELD CONDITIONS SO WARRANT. GEOTECHNICAL FABRIC FOR GROUND STABILIZATION SHALL BE PLACED BETWEEN THE EXISTING SUBGRADE AND THE PROPOSED AGGREGATE SUBGRADE IMPROVEMENT.

SEWER

1. THE COST OF MAKING SEWER CONNECTIONS TO EXISTING OR PROPOSED SEWER OR DRAINAGE STRUCTURES SHALL BE INCLUDED IN THE COST OF THE SEWER OR STRUCTURE BEING CONSTRUCTED.

2. UNLESS OTHERWISE NOTED ON THE PLANS, THE EXISTING DRAINAGE FACILITIES SHALL REMAIN IN USE DURING THE PERIOD OF CONSTRUCTION. LOCATIONS OF EXISTING DRAINAGE STRUCTURES AND SEWERS AS SHOWN ON THE PLANS ARE APPROXIMATE. PRIOR TO COMMENCING WORK THE CONTRACTOR, AT HIS OWN EXPENSE, SHALL DETERMINE THE EXACT LOCATIONS OF EXISTING STRUCTURES WHICH ARE WITHIN THE PROPOSED CONSTRUCTION LIMITS. DURING CONSTRUCTION, IF THE CONTRACTOR ENCOUNTERS OR OTHERWISE BECOMES AWARE OF ANY SEWERS, UNDERDRAINS OR FIELD DRAINS WITHIN THE RIGHT-OF-WAY OTHER THAN THOSE SHOWN ON THE PLANS, HE SHALL SO INFORM THE ENGINEER, WHO SHALL DIRECT THE WORK NECESSARY TO MAINTAIN OR REPLACE THE FACILITIES IN SERVICE AND TO PROTECT THEM FROM DAMAGE DURING CONSTRUCTION IF MAINTAINED. EXISTING FACILITIES TO BE MAINTAINED THAT ARE DAMAGED BECAUSE OF THE NON-COMPLIANCE WITH THIS PROVISION SHALL BE REPLACED AT THE CONTRACTOR'S OWN EXPENSE. SHOULD THE ENGINEER HAVE DIRECTED THE REPLACEMENT OF A FACILITY, THE NECESSARY WORK AND PAYMENT SHALL BE IN ACCORDANCE WITH SECTIONS 550 AND 601, AND ARTICLE 104.02 OF THE STANDARD SPECIFICATIONS.

3. WHEN EXISTING DRAINAGE FACILITIES ARE DISTURBED, THE CONTRACTOR SHALL PROVIDE AND MAINTAIN TEMPORARY OUTLETS AND CONNECTIONS FOR ALL PRIVATE OR PUBLIC DRAINS, SEWERS OR CATCH BASINS. THE CONTRACTOR SHALL PROVIDE FACILITIES TO TAKE IN ALL STORM WATER WHICH WILL BE RECEIVED BY THESE DRAINS AND SEWERS AND DISCHARGE THE SAME. HE SHALL PROVIDE AND MAINTAIN AN EFFICIENT PUMPING PLANT, IF NECESSARY, AND A TEMPORARY OUTLET. HE SHALL BE PREPARED AT ALL TIMES TO DISPOSE OF THE WATER RECEIVED FROM TEMPORARY CONNECTIONS UNTIL SUCH TIME AS THE PERMANENT CONNECTIONS WITH SEWER ARE BUILT AND IN SERVICE. THIS WORK WILL NOT BE PAID FOR SEPARATELY, BUT SHALL BE INCLUDED IN THE CONTRACT.

4. ALL ABANDONED PIPE AND STRUCTURE INVERTS SHALL BE PLUGGED WITH BRICK AND MORTAR TO THE SATISFACTION OF THE ENGINEER. THIS WORK SHALL BE INCLUDED IN THE COST OF ITEMS BEING REMOVED.

5. TOP OF FRAME ("RIM") ELEVATIONS GIVEN ON THE PLANS ARE ONLY TO ASSIST THE CONTRACTOR IN DETERMINING THE APPROXIMATE OVERALL HEIGHT OF EACH STRUCTURE. FRAMES ON ALL NEW STRUCTURES SHALL BE ADJUSTED TO THE FINAL ELEVATIONS OF THE AREAS IN WHICH THEY ARE LOCATED, AS PART OF THE STRUCTURE COST.

6. DRAINAGE STRUCTURE FLAT-TOPS AND CONES SHALL BE TURNED SO THAT THE FRAMES ARE CLOSEST TO THE CENTERLINE OF THE ROAD. ALL FLAT-TOPS AND CONES ARE ASSUMED TO BE ECCENTRIC.

7. ALL SEWER AND WATER SERVICES CROSSED BY NEW STORM SEWERS SHALL BE PROPERLY LOCATED AND PROTECTED DURING CONSTRUCTION. ANY DAMAGE TO SAID SERVICES NOT CONSIDERED TO BE IN CONFLICT WITH THE PROPOSED STORM SEWER SHALL BE REPAIRED BY THE CONTRACTOR AT HIS OWN EXPENSE.

WATERMAIN

1. THE CONTRACTOR SHALL GIVE THE CITY A MINIMUM OF 48 HOURS NOTICE PRIOR TO BEGINNING ANY WATERMAIN WORK, INCLUDING WATERMAIN SHUT OFFS.

2. WATERMAIN SHALL BE INSTALLED AT A MINIMUM COVER OF 5.5' BELOW FINISHED GRADE AND NO DEEPER THAN 8' FROM FINISHED GRADE WITHOUT THE PRIOR APPROVAL OF THE ENGINEER.

3. SERVICE LINES SHALL HAVE A MINIMUM COVER OF 5.5' AND A MAXIMUM COVER OF 8'. COUPLINGS SHALL NOT BE INSTALLED UNDER PAVEMENT. WHEN INSTALLING A BACK LOOP OVER OR UNDER WATERMAIN, THE LOOP SHALL HAVE A MAXIMUM RADIUS OF 4'.

4. WATERMAIN SHALL NOT BE SLEEVED OR ENCASED WITHOUT THE PRIOR APPROVAL OF THE ENGINEER.

5. ALL WATERMAIN SHALL BE WRAPPED. THE WRAPPING SHALL BE INSTALLED PER MANUFACTURER GUIDELINES. AFTER THE WRAPPING HAS BEEN REMOVED TO INSTALL SERVICE TAPS, LATERAL CONNECTION, ETC., THE WATERMAIN SHALL BE RE-WRAPPED WATER TIGHT WITH BLACK VINYL TAPE MEETING ASTM D1000.

6. THE COST FOR REMOVING EXISTING WATERMAIN AND FITTINGS AS WELL AS CAPPING THE EXISTING WATERMAIN IN ORDER TO INSTALL PROPOSED WATERMAIN, STORM SEWER, AND SANITARY SEWER SHALL BE INCLUDED IN THE COST OF THE PROPOSED WATERMAIN, STORM SEWER, OR SANITARY SEWER BEING INSTALLED AS SHOWN IN THE PLANS.

7. ALL ENDS OF ABANDONED WATERMAIN SHALL BE CAPPED USING MECHANICAL JOINT CAPS. BRICK AND MORTAR WILL NOT BE ALLOWED. THIS WORK SHALL NOT BE PAID FOR SEPARATELY BUT SHALL BE INCLUDED IN THE COST OF THE ITEM BEING CONSTRUCTED OR REMOVED.

8. ALL WATERMAIN SHALL BE THOROUGHLY FLUSHED AND THEN SUBJECTED TO A 2 HOUR PRESSURE AND LEAKAGE TEST AT 150 PSI BY THE CONTRACTOR AND SHALL BE CHLORINATED IN ACCEPTANCE WITH CITY STANDARDS AND THE STANDARD SPECIFICATIONS FOR WATER AND SEWER MAIN CONSTRUCTION IN ILLINOIS. PRESSURE TESTING OF WATERMAIN SHALL INCLUDE HYDRANTS BY PRESSURE TESTING AGAINST THE INTERNAL VALVE OF HYDRANT. MAKE-UP WATER SHALL BE SUPPLIED FROM AN OPEN DRUM, AND THE VOLUME OF WATER USED SHALL NOT EXCEED THAT ALLOWED BY THE STANDARD SPECIFICATIONS.

9. WATER TIGHT VALVE VAULTS SHALL BE PROVIDED FOR ALL VALVES. VALVE VAULTS SHALL CONFORM TO THE SPECIFICATIONS IN THE CONTRACT DOCUMENTS AND THE DETAILS IN THE PLANS. ALL VALVES SHALL BE RESILIENT WEDGE GATE VALVES CONFORMING TO AWWA C509, NONRISING STEM, MECHANICAL JOINT ENDS, 200 PSI WORKING PRESSURE INSTALLED WITH PROPER BACKING, AND RIGHT HAND CLOSING. ALL TRIM BOLTS SHALL BE STAINLESS STEEL.

10. NON-PREFORMED MASTIC SHALL BE USED BETWEEN ALL VALVE VAULT SECTIONS INCLUDING FROM TOP OF CONE OR FLAT TOP SECTION TO BOTTOM OF FRAME, AND ALL ADJUSTING RINGS.

11. BUFFALO BOXES (B-BOXES) SHALL BE ADJUSTED TO THE FINAL GRADE AND WILL BE KEYABLE AFTER THE COMPLETION OF PAVED AREAS (FOR THOSE AREAS WHERE B-BOXES WILL BE LOCATED IN PAVED AREAS) AND FINAL LANDSCAPING. THE ADJUSTMENT TO THE FINAL GRADE SHALL NOT BE PAID FOR SEPARATELY.

12. THE CONTRACTOR SHALL PROVIDE "AS-BUILT" DRAWINGS OF ALL SEWER AND WATERMAIN INSTALLATIONS WITHIN 14 DAYS AFTER THE COMPLETION OF THE INSTALLATION.

INDEX OF SHEETS

SHEET NO.	DESCRIPTION
1	COVER SHEET
2	GENERAL NOTES AND INDEX OF SHEETS
3	GENERAL NOTES AND STANDARD DRAWINGS
4 - 8	SUMMARY OF QUANTITIES
9 - 10	TYPICAL SECTIONS
11	EARTHWORK SCHEDULES
12	ALIGNMENT, TIES AND BENCHMARKS
13	ROADWAY, DRAINAGE AND UTILITIES REMOVAL PLAN
14 - 15	ROADWAY PLAN AND PROFILE
16	MAINTENANCE OF TRAFFIC - DETOUR PLAN
17	EROSION AND SEDIMENT CONTROL GENERAL NOTES
18 - 19	EROSION AND SEDIMENT CONTROL PLAN
20 - 26	EROSION AND SEDIMENT CONTROL DETAILS
27 - 28	DRAINAGE & UTILITIES PLAN AND PROFILE
29	COMPENSATORY STORAGE - GRADING PLAN
30 - 35	PLAT OF HIGHWAYS
36	PAVEMENT MARKING AND SIGNING PLAN
37 - 38	LANDSCAPING PLAN
39 - 53	STRUCTURE PLAN
54 - 65	CONSTRUCTION DETAILS
66 - 78	CROSS SECTIONS

SIGNING, STRIPING & LANDSCAPING

1. THE CONTRACTOR SHALL ADHERE TO LIMITS OF RESTORATION SHOWN. AREAS OUTSIDE THESE LIMITS THAT ARE DAMAGED OR DISTURBED BY THE CONTRACTOR SHALL BE RESTORED BY THE CONTRACTOR AT HIS OWN EXPENSE, AND NO ADDITIONAL COMPENSATION WILL BE ALLOWED.
2. ALL EXISTING TRAFFIC SIGNS WHICH INTERFERE WITH THE CONTRACTOR'S WORK SHALL BE REMOVED, A RECORD MADE OF THEIR CONDITION, AND SAFELY STORED AND SAFEGUARDED BY THE CONTRACTOR UNTIL THE ENGINEER DETERMINES THAT THEY BE REINSTALLED IN THE PERMANENT LOCATIONS.
3. ANY SIGN WHICH IS DAMAGED DURING THE TIME IT IS STORED SHALL BE REPAIRED OR REPLACED IN KIND BY THE CONTRACTOR AT HIS OWN EXPENSE PRIOR TO PERMANENT REINSTALLATION.
4. ALL EXISTING SIGNS AND POSTS REMOVED AND NOT REINSTALLED SHALL BE RETURNED TO THE JURISIDICTION FROM WHICH IT WAS REMOVED: CITY OF BATAVIA.

UTILITIES

1. THE CONTRACTOR SHALL COORDINATE CONSTRUCTION ACTIVITIES WITH UTILITY COMPANIES. THE LOCATION OF PUBLIC OR PRIVATE UTILITIES SHOWN ON THE PLANS ARE APPROXIMATE AND THE ENGINEER DOES NOT GUARANTEE THEIR ACCURACY. THE CONTRACTOR WILL BE REQUIRED TO ASCERTAIN THE EXACT LOCATION OF SUCH UTILITIES AND EXERCISE CARE DURING HIS CONSTRUCTION OPERATIONS SO AS NOT TO DAMAGE THEM IN ACCORDANCE WITH THE SPECIAL PROVISIONS AND ARTICLE 107.31 OF THE "STANDARD SPECIFICATIONS." THE CONTRACTOR SHALL BE RESPONSIBLE FOR CONTACTING THE OWNERS OF ALL EXISTING UTILITIES SO THAT THEIR FACILITIES MAY BE LOCATED AND ADJUSTED OR MOVED, IF NECESSARY, PRIOR TO THE START OF THE CONSTRUCTION OPERATIONS.
2. THE CONTRACTOR SHALL BE RESPONSIBLE FOR THE PROTECTION OF ALL ABOVE AND BELOW GROUND UTILITIES EVEN THOUGH THEY MAY NOT BE SHOWN ON THE PLANS. ANY UTILITY THAT IS DAMAGED DURING CONSTRUCTION SHALL BE REPAIRED OR REPLACED TO THE SATISFACTION OF THE ENGINEER OR THE UTILITY OWNER. THIS WORK SHALL BE AT THE CONTRACTOR'S EXPENSE. THE CONTRACTOR SHALL NOTIFY ALL UTILITY OWNERS OF HIS CONSTRUCTION SCHEDULE AND SHALL COORDINATE CONSTRUCTION OPERATIONS WITH THE UTILITY OWNERS SO THAT RELOCATION OF UTILITY LINES AND STRUCTURES MAY PROCEED IN AN ORDERLY MANNER. NOTIFICATION SHALL BE IN WRITING, WITH COPIES TRANSMITTED TO THE ENGINEER.
3. ANY EXISTING OR PROPOSED SEWER DAMAGED BY THE CONTRACTOR DURING CONSTRUCTION SHALL BE REPLACED BY THE CONTRACTOR TO THE SATISFACTION OF THE ENGINEER AT NO COST TO THE CITY.
4. THE CONTRACTOR SHALL RECEIVE NO ADDITIONAL COMPENSATION FOR CONSTRUCTION STAGING NECESSARY TO ACCOMMODATE UTILITY RELOCATION OR ADJUSTMENT AND/OR FOR DELAYS CAUSED BY UTILITY RELOCATION OR ADJUSTMENT.
5. THE CONTRACTOR SHALL FURNISH ALL LABOR, EQUIPMENT AND MATERIAL NECESSARY FOR DEWATERING TRENCH EXCAVATIONS AS WELL AS SHORING TRENCH WALLS DURING UTILITY OPERATIONS. COMPLIANCE WITH THE ABOVE WILL BE INCLUDED IN THE COST OF THE UTILITY INSTALLATIONS.

CLEARING

1. CONTRACTOR SHALL PAY SPECIAL ATTENTION TO ARTICLE 201.01(a) OF THE STANDARD SPECIFICATIONS. REMOVAL OF ALL OBSTRUCTIONS IN THE RIGHT-OF-WAY, THAT ARE NOT INCLUDED IN A SPECIFIC REMOVAL ITEM, SHALL BE CONSIDERED CLEARING AND INCLUDED IN THE COST OF THE CONTRACT. THIS SHALL INCLUDE, BUT NOT LIMITED TO, FENCES, WALLS, FOUNDATIONS, BUILDINGS, WOODEN POWER POLES, WOODEN PLANTERS, GATES, AND ALL VEGETATION, TREES, SHRUBS, ETC. LESS THAN 6" IN DIAMETER.

EPOXY COATING ON REINFORCEMENT

1. FOR WORK OUTSIDE THE LIMITS OF BRIDGE APPROACH PAVEMENT, ALL REFERENCES IN THE HIGHWAY STANDARDS AND STANDARD SPECIFICATIONS FOR REINFORCEMENT, DOWEL BARS AND TIE BARS IN PAVEMENT, SHOULDERS, CURB, GUTTER, COMBINATION CURB AND GUTTER AND MEDIAN, AND CHAIR SUPPORTS FOR CRC PAVEMENT, SHALL BE EPOXY COATED, UNLESS NOTED ON THE PLANS.

STRUCTURE

1. THE ILLINOIS DEPARTMENT OF TRANSPORTATION IS NOT THE OWNER OF RECORD FOR THIS BRIDGE. THOSE SEEKING HISTORIC AS-BUILT OR OTHER RECORD PLANS AND DOCUMENTS MUST CONTACT THE OWNER OF RECORD (SEE CONTACT BELOW) TO MAKE ARRANGEMENTS FOR ACCESS TO THIS INFORMATION.

GEOTECHNICAL AND CCDD REPORTS

1. THOSE SEEKING THE FULL GEOTECHNICAL AND CCDD REPORTS SHOULD CONTACT THE OWNER OF RECORD. TO MAKE ARRANGEMENTS FOR ACCESS TO THIS INFORMATION, PLEASE CONTACT:

   ANDREA M. PODRAZA, P.E., CFM
   SENIOR CIVIL ENGINEER
   CITY OF BATAVIA
   (630) 454-2750

ADDITIONAL SYMBOLS, ABBREVIATIONS AND PATTERNS

- EX & PR VALVE VAULT
- EXISTING VALVE AND VALVE BOX
- EX & PR FIRE HYDRANT
- EXISTING DOMESTIC WATER SERVICE BOX
- EXISTING GAS VALVE
- EXISTING TELEPHONE/JUNCTION BOX PEDESTAL
- DEPRESSED CURB (LOCATIONS SHOWN ON ROADWAY PLANS)
- PITCH OUT GUTTER (LOCATIONS SHOWN ON ROADWAY PLANS)
- CLASS D PATCHES (TYPE AND DEPTH NOTED ON ROADWAY PLANS)
- HOT-MIX ASPHALT SURFACE REMOVAL - BUTT JOINT (REMOVAL PLAN)
- HOT-MIX ASPHALT SURFACE REMOVAL, 2" (REMOVAL PLAN)
  HOT-MIX ASPHALT SURFACE COURSE, MIX "D", N50, 2" (ROADWAY PLAN)
- PAVEMENT REMOVAL
- DRIVEWAY PAVEMENT REMOVAL
  SIDEWALK REMOVAL
- HOT-MIX ASPHALT REMOVAL OVER PATCHES, 2"
- COMBINATION CURB AND GUTTER REMOVAL
- SINGLE ITEM REMOVAL
- SURVEY "MAG" NAIL
- SURVEY 5/8" IRON ROD WITH PLASTIC CAP

MISCELLANEOUS

1. DIMENSIONS: IT SHALL BE THE CONTRACTOR'S RESPONSIBILITY TO VERIFY ALL DIMENSIONS AND CONDITIONS EXISTING IN THE FIELD PRIOR TO ORDERING MATERIALS AND BEGINNING CONSTRUCTION.
2. UNLESS OTHERWISE AUTHORIZED BY THE ENGINEER, ALL EXISTING ACCESS POINTS SHALL BE MAINTAINED AT ALL TIMES BY THE CONTRACTOR.

STATE STANDARDS

STANDARD NO.	DESCRIPTION
000001-06	STANDARD SYMBOLS, ABBREVIATIONS AND PATTERNS
280001-07	TEMPORARY EROSION CONTROL SYSTEMS
420401-11	BRIDGE APPROACH PAVEMENT CONNECTOR
424001-08	PERPENDICULAR CURB RAMPS FOR SIDEWALKS
424016-02	MID-BLOCK CURB RAMPS FOR SIDEWALKS
442201-03	CLASS C AND D PATCHES
515001-03	NAME PLATE FOR BRIDGES
542301-03	PRECAST REINFORCED CONCRETE FLARED END SECTION
602001-02	CATCH BASIN TYPE A
602301-04	INLET - TYPE A
602401-03	MANHOLE TYPE A
602501-02	VALVE VAULT TYPE A
602601-03	PRECAST REINFORCED CONCRETE FLAT SLAB TOP
604001-04	FRAME AND LIDS TYPE 1
604086-03	FRAME & GRATE TYPE 23
606001-06	CONCRETE CURB TYPE B AND COMBINATION CONCRETE CURB AND GUTTER
630001-10	STEEL PLATE BEAM GUARDRAIL
630201-06	PCC/HMA STABILIZATION AT STEEL PLATE BEAM GUARDRAIL
630301-06	SHOULDER WIDENING FOR TYPE 1 (SPECIAL) GUARDRAIL TERMINALS
631031-13	TRAFFIC BARRIER TERMINAL, TYPE 6
635001-01	DELINEATORS
635006-03	REFLECTOR AND TERMINAL MARKER PLACEMENT
635011-02	REFLECTOR MARKER AND MOUNTING DETAILS
701001-02	OFF-RD OPERATIONS, 2L, 2W, MORE THAN 15' AWAY
701006-05	OFF-RD OPERATIONS, 2L, 2W, MORE THAN 15' TO 24' FROM PAVEMENT EDGE
701301-04	LANE CLOSURE, 2L, 2W, SHORT TIME OPERATIONS
701311-03	LANE CLOSURE, 2L, 2W, MOVING OPERATIONS - DAY ONLY
701501-06	URBAN LANE CLOSURE, 2L, 2W, UNDIVIDED
701801-05	SIDEWALK, CORNER OR CROSSWALK CLOSURE
701901-04	TRAFFIC CONTROL DEVICES
720001-01	SIGN PANEL MOUNTING DETAILS
720006-04	SIGN PANEL ERECTION DETAILS
728001-01	TELESCOPING STEEL SIGN SUPPORT
780001-05	TYPICAL PAVEMENT MARKINGS

CITY OF BATAVIA STANDARDS

STANDARD NO.	DESCRIPTION
ST_CGSTD	CURB & GUTTER DETAIL
STM_CB SNOUT	CATCH BASIN - GRIT OIL STOP (SNOUT)
STM_MH	STORM SEWER MANHOLE
STM_MH LID	STORM MANHOLE LID DETAIL
WM_FH	FIRE HYDRANT DETAIL

NOTE: ADDITIONAL DETAIL SHOWN IN THE CITY OF BATAVIA STANDARDS SHALL BE USED IN ADDITION TO STATE STANDARDS

SUMMARY OF QUANTITIES

SUMMARY OF QUANTITIES				CONSTRUCTION CODES STP BRIDGE FUNDING 80% FEDERAL / 20% LOCAL						
CODE NO.	ITEM DESCRIPTION	UNIT	TOTAL QUANTITY	ROADWAY RECON 0004	BRIDGE REPLACE 0011	SAFETY 0021	BICYCLE & PEDESTRIAN 0028	LANDSCAPE 0031	TRAINEES 0042	UTILITIES 0043
20100110	TREE REMOVAL (6 TO 15 UNITS DIAMETER)	UNIT	206	206	0	0	0	0	0	0
20100210	TREE REMOVAL (OVER 15 UNITS DIAMETER)	UNIT	102	102	0	0	0	0	0	0
20101000	TEMPORARY FENCE	FOOT	192	192	0	0	0	0	0	0
20101200	TREE ROOT PRUNING	EACH	9	9	0	0	0	0	0	0
20101300	TREE PRUNING (1 TO 10 INCH DIAMETER)	EACH	12	12	0	0	0	0	0	0
20101350	TREE PRUNING (OVER 10 INCH DIAMETER)	EACH	4	4	0	0	0	0	0	0
20200100	EARTH EXCAVATION	CU YD	3,394	3,394	0	0	0	0	0	0
20201200	REMOVAL AND DISPOSAL OF UNSUITABLE MATERIAL	CU YD	3,506	3,506	0	0	0	0	0	0
20300100	CHANNEL EXCAVATION	CU YD	428	0	428	0	0	0	0	0
20800150	TRENCH BACKFILL	CU YD	106	106	0	0	0	0	0	0
20900110	POROUS GRANULAR BACKFILL	CU YD	101	0	101	0	0	0	0	0
21001000	GEOTECHNICAL FABRIC FOR GROUND STABILIZATION	SQ YD	300	300	0	0	0	0	0	0
21101625	TOPSOIL FURNISH AND PLACE, 6"	SQ YD	6,665	0	0	0	0	6,665	0	0
25000200	SEEDING, CLASS 2	ACRE	0.50	0	0	0	0	0.50	0	0
25000400	NITROGEN FERTILIZER NUTRIENT	POUND	118	0	0	0	0	118	0	0
25000600	POTASSIUM FERTILIZER NUTRIENT	POUND	118	0	0	0	0	118	0	0
25100115	MULCH, METHOD 2	ACRE	0.50	0	0	0	0	0.50	0	0
25100630	EROSION CONTROL BLANKET	SQ YD	4,347	0	0	0	0	4,347	0	0
25100635	HEAVY DUTY EROSION CONTROL BLANKET	SQ YD	723	0	0	0	0	723	0	0
25200110	SODDING, SALT TOLERANT	SQ YD	1,021	0	0	0	0	1,021	0	0
25200200	SUPPLEMENTAL WATERING	UNIT	10	0	0	0	0	10	0	0
28000250	TEMPORARY EROSION CONTROL SEEDING	POUND	138	138	0	0	0	0	0	0
28000305	TEMPORARY DITCH CHECKS	FOOT	196	196	0	0	0	0	0	0
28000400	PERIMETER EROSION BARRIER	FOOT	1,166	1,166	0	0	0	0	0	0
28000500	INLET AND PIPE PROTECTION	EACH	1	1	0	0	0	0	0	0
28000510	INLET FILTERS	EACH	16	16	0	0	0	0	0	0
28100105	STONE RIPRAP, CLASS A3	SQ YD	119	119	0	0	0	0	0	0

SUMMARY OF QUANTITIES

SUMMARY OF QUANTITIES				CONSTRUCTION CODES STP BRIDGE FUNDING 80% FEDERAL / 20% LOCAL						
CODE NO.	ITEM DESCRIPTION	UNIT	TOTAL QUANTITY	ROADWAY RECON 0004	BRIDGE REPLACE 0011	SAFETY 0021	BICYCLE & PEDESTRIAN 0028	LANDSCAPE 0031	TRAINEES 0042	UTILITIES 0043
28100107	STONE RIPRAP, CLASS A4	SQ YD	531	0	531	0	0	0	0	0
28200200	FILTER FABRIC	SQ YD	650	119	531	0	0	0	0	0
30300001	AGGREGATE SUBGRADE IMPROVEMENT	CU YD	100	100	0	0	0	0	0	0
30300112	AGGREGATE SUBGRADE IMPROVEMENT 12"	SQ YD	680	680	0	0	0	0	0	0
35101600	AGGREGATE BASE COURSE, TYPE B 4"	SQ YD	388	0	0	0	388	0	0	0
35101800	AGGREGATE BASE COURSE, TYPE B 6"	SQ YD	860	25	0	0	835	0	0	0
40201000	AGGREGATE FOR TEMPORARY ACCESS	TON	22	22	0	0	0	0	0	0
40600275	BITUMINOUS MATERIALS (PRIME COAT)	POUND	3,349	1,471	0	0	1,878	0	0	0
40600625	LEVELING BINDER (MACHINE METHOD), N50	TON	15	15	0	0	0	0	0	0
40600982	HOT-MIX ASPHALT SURFACE REMOVAL - BUTT JOINT	SQ YD	47	47	0	0	0	0	0	0
40603335	HOT-MIX ASPHALT SURFACE COURSE, MIX "D", N50	TON	252	111	0	0	141	0	0	0
40701861	HOT-MIX ASPHALT PAVEMENT (FULL-DEPTH), 9"	SQ YD	360	360	0	0	0	0	0	0
42001300	PROTECTIVE COAT	SQ YD	588	200	0	0	388	0	0	0
42001430	BRIDGE APPROACH PAVEMENT CONNECTOR (FLEXIBLE)	SQ YD	27	27	0	0	0	0	0	0
42400200	PORTLAND CEMENT CONCRETE SIDEWALK 5 INCH	SQ FT	3,486	0	0	0	3,486	0	0	0
42400800	DETECTABLE WARNINGS	SQ FT	119	0	0	0	119	0	0	0
44000100	PAVEMENT REMOVAL	SQ YD	443	443	0	0	0	0	0	0
44000157	HOT-MIX ASPHALT SURFACE REMOVAL, 2"	SQ YD	956	956	0	0	0	0	0	0
44000200	DRIVEWAY PAVEMENT REMOVAL	SQ YD	33	33	0	0	0	0	0	0
44000500	COMBINATION CURB AND GUTTER REMOVAL	FOOT	229	229	0	0	0	0	0	0
44000600	SIDEWALK REMOVAL	SQ FT	1,688	0	0	0	1,688	0	0	0
44002208	HOT-MIX ASPHALT REMOVAL OVER PATCHES, 2"	SQ YD	14	14	0	0	0	0	0	0
44201717	CLASS D PATCHES, TYPE II, 6 INCH	SQ YD	36	36	0	0	0	0	0	0
48203021	HOT-MIX ASPHALT SHOULDERS, 6"	SQ YD	208	0	0	208	0	0	0	0
50101700	REMOVAL OF EXISTING SUPERSTRUCTURES NO. 1	EACH	1	0	1	0	0	0	0	0
50102400	CONCRETE REMOVAL	CU YD	21.6	0	21.6	0	0	0	0	0
50200300	COFFERDAM EXCAVATION	CU YD	922	0	922	0	0	0	0	0

SUMMARY OF QUANTITIES

SUMMARY OF QUANTITIES				CONSTRUCTION CODES STP BRIDGE FUNDING 80% FEDERAL / 20% LOCAL						
CODE NO.	ITEM DESCRIPTION	UNIT	TOTAL QUANTITY	ROADWAY RECON 0004	BRIDGE REPLACE 0011	SAFETY 0021	BICYCLE & PEDESTRIAN 0028	LANDSCAPE 0031	TRAINEES 0042	UTILITIES 0043
50200400	ROCK EXCAVATION FOR STRUCTURES	CU YD	7	0	7	0	0	0	0	0
50201121	COFFERDAM (TYPE 2) (LOCATION - 1)	EACH	1	0	1	0	0	0	0	0
50201122	COFFERDAM (TYPE 2) (LOCATION - 2)	EACH	1	0	1	0	0	0	0	0
50201123	COFFERDAM (TYPE 2) (LOCATION - 3)	EACH	1	0	1	0	0	0	0	0
50300225	CONCRETE STRUCTURES	CU YD	126.3	0	126.3	0	0	0	0	0
50300255	CONCRETE SUPERSTRUCTURE	CU YD	194.4	0	194.4	0	0	0	0	0
50300260	BRIDGE DECK GROOVING	SQ YD	394	0	394	0	0	0	0	0
50300300	PROTECTIVE COAT	SQ YD	481	0	481	0	0	0	0	0
50800205	REINFORCEMENT BARS, EPOXY COATED	POUND	49,660	0	49,660	0	0	0	0	0
50901720	BICYCLE RAILING	FOOT	106	0	106	0	0	0	0	0
50901750	PARAPET RAILING	FOOT	98	0	98	0	0	0	0	0
51500100	NAME PLATES	EACH	1	0	1	0	0	0	0	0
59100100	GEOCOMPOSITE WALL DRAIN	SQ YD	81	0	81	0	0	0	0	0
54213657	PRECAST REINFORCED CONCRETE FLARED END SECTIONS 12"	EACH	1	1	0	0	0	0	0	0
54213669	PRECAST REINFORCED CONCRETE FLARED END SECTIONS 24"	EACH	4	4	0	0	0	0	0	0
550A0050	STORM SEWERS, CLASS A, TYPE 1 12"	FOOT	95	95	0	0	0	0	0	0
550A0120	STORM SEWERS, CLASS A, TYPE 1 24"	FOOT	70	70	0	0	0	0	0	0
550A0340	STORM SEWERS, CLASS A, TYPE 2 12"	FOOT	212	212	0	0	0	0	0	0
550A0380	STORM SEWERS, CLASS A, TYPE 2 18"	FOOT	45	45	0	0	0	0	0	0
550A0410	STORM SEWERS, CLASS A, TYPE 2 24"	FOOT	70	70	0	0	0	0	0	0
56103000	DUCTILE IRON WATER MAIN 6"	FOOT	30	0	0	0	0	0	0	30
56103200	DUCTILE IRON WATER MAIN 10"	FOOT	317	0	0	0	0	0	0	317
56105100	WATER VALVES 10"	EACH	2	0	0	0	0	0	0	2
56400500	FIRE HYDRANTS TO BE REMOVED	EACH	2	0	0	0	0	0	0	2
56400820	FIRE HYDRANT WITH AUXILIARY VALVE AND VALVE BOX	EACH	2	0	0	0	0	0	0	2
60201330	CATCH BASINS, TYPE A, 4'-DIAMETER, TYPE 23 FRAME AND GRATE	EACH	7	7	0	0	0	0	0	0
60205030	CATCH BASINS, TYPE A, 5'-DIAMETER, TYPE 23 FRAME AND GRATE	EACH	1	1	0	0	0	0	0	0

SUMMARY OF QUANTITIES

SUMMARY OF QUANTITIES				CONSTRUCTION CODES STP BRIDGE FUNDING 80% FEDERAL / 20% LOCAL						
CODE NO.	ITEM DESCRIPTION	UNIT	TOTAL QUANTITY	ROADWAY RECON 0004	BRIDGE REPLACE 0011	SAFETY 0021	BICYCLE & PEDESTRIAN 0028	LANDSCAPE 0031	TRAINEES 0042	UTILITIES 0043
60218400	MANHOLES, TYPE A, 4'-DIAMETER, TYPE 1 FRAME, CLOSED LID	EACH	2	2	0	0	0	0	0	0
60221100	MANHOLES, TYPE A, 5'-DIAMETER, TYPE 1 FRAME, CLOSED LID	EACH	1	1	0	0	0	0	0	0
60237460	INLETS, TYPE A, TYPE 23 FRAME AND GRATE	EACH	5	5	0	0	0	0	0	0
60248700	VALVE VAULTS, TYPE A, 4'-DIAMETER, TYPE 1 FRAME, CLOSED LID	EACH	2	0	0	0	0	0	0	2
60604100	COMBINATION CONCRETE CURB AND GUTTER, TYPE B-6.12 (MODIFIED)	FOOT	805	805	0	0	0	0	0	0
63000001	STEEL PLATE BEAM GUARDRAIL, TYPE A, 6 FOOT POSTS	FOOT	37.5	0	0	37.5	0	0	0	0
63100085	TRAFFIC BARRIER TERMINAL, TYPE 6	EACH	4	0	0	4	0	0	0	0
63100167	TRAFFIC BARRIER TERMINAL, TYPE 1 (SPECIAL) TANGENT	EACH	4	0	0	4	0	0	0	0
67000400	ENGINEER'S FIELD OFFICE, TYPE A	CAL MO	6	6	0	0	0	0	0	0
67100100	MOBILIZATION	L SUM	1	1	0	0	0	0	0	0
70106800	CHANGEABLE MESSAGE SIGN	CAL MO	12	12	0	0	0	0	0	0
72000100	SIGN PANEL - TYPE 1	SQ FT	40	0	0	40	0	0	0	0
72400100	REMOVE SIGN PANEL ASSEMBLY - TYPE A	EACH	5	0	0	5	0	0	0	0
72400500	RELOCATE SIGN PANEL ASSEMBLY - TYPE A	EACH	2	0	0	2	0	0	0	0
72800100	TELESCOPING STEEL SIGN SUPPORT	FOOT	108	0	0	108	0	0	0	0
78000200	THERMOPLASTIC PAVEMENT MARKING - LINE 4"	FOOT	949	0	0	949	0	0	0	0
78000400	THERMOPLASTIC PAVEMENT MARKING - LINE 6"	FOOT	58	0	0	58	0	0	0	0
78000600	THERMOPLASTIC PAVEMENT MARKING - LINE 12"	FOOT	48	0	0	48	0	0	0	0
78006110	PREFORMED THERMOPLASTIC PAVEMENT MARKING - LINE 4"	FOOT	341	0	0	341	0	0	0	0
78200410	GUARDRAIL MARKERS, TYPE A	EACH	8	0	0	8	0	0	0	0
78201000	TERMINAL MARKER - DIRECT APPLIED	EACH	4	0	0	4	0	0	0	0
81028410	UNDERGROUND CONDUIT, PVC, 6" DIA.	FOOT	296	0	0	0	0	0	0	296
81603000	UNIT DUCT, 600V, 2-1C NO.8, 1/C NO.8 GROUND, (XLP-TYPE USE), 3/4" DIA. POLYETHYLENE	FOOT	177	0	0	177	0	0	0	0
84400105	RELOCATE EXISTING LIGHTING UNIT	EACH	2	0	0	2	0	0	0	0
Z0004510	HOT-MIX ASPHALT DRIVEWAY PAVEMENT, 3"	SQ YD	25	25	0	0	0	0	0	0
Z0013796	SEDIMENT CONTROL, STABILIZED CONSTRUCTION ENTRANCE	SQ YD	156	156	0	0	0	0	0	0
Z0013798	CONSTRUCTION LAYOUT	L SUM	1	1	0	0	0	0	0	0

SUMMARY OF QUANTITIES

SUMMARY OF QUANTITIES				CONSTRUCTION CODES STP BRIDGE FUNDING 80% FEDERAL / 20% LOCAL						
CODE NO.	ITEM DESCRIPTION	UNIT	TOTAL QUANTITY	ROADWAY RECON 0004	BRIDGE REPLACE 0011	SAFETY 0021	BICYCLE & PEDESTRIAN 0028	LANDSCAPE 0031	TRAINEES 0042	UTILITIES 0043
Z0017400	DRAINAGE & UTILITY STRUCTURES TO BE ADJUSTED	EACH	2	2	0	0	0	0	0	0
Z0017700	DRAINAGE & UTILITY STRUCTURES TO BE RECONSTRUCTED	EACH	2	2	0	0	0	0	0	0
Z0019600	DUST CONTROL WATERING	UNIT	100	100	0	0	0	0	0	0
Z0033028	MAINTENANCE OF LIGHTING SYSTEM	CAL MO	6	0	0	6	0	0	0	0
Z0076600	TRAINEES	HOUR	1	0	0	0	0	0	1	0
A2001916	TREE, ACER SACCHARUM LEGACY (LEGACY SUGAR MAPLE), 2" CALIPER, BALLED AND BURLAPPED	EACH	5	0	0	0	0	5	0	0
A2005020	TREE, GYMNOCLADUS DIOICUS (KENTUCKY COFFEETREE), 2-1/2" CALIPER, BALLED AND BURLAPPED	EACH	4	0	0	0	0	4	0	0
A2006820	TREE, QUERCUS MUEHLENBERGII (CHINKAPIN OAK), 2-1/2" CALIPER, BALLED AND BURLAPPED	EACH	3	0	0	0	0	3	0	0
A2007120	TREE, QUERCUS RUBRA (RED OAK), 2-1/2" CALIPER, BALLED AND BURLAPPED	EACH	3	0	0	0	0	3	0	0
B2001420	TREE, CORNUS MAS (CORNELIAN CHERRY DOG WOOD), 2" CALIPER, TREE FORM, BALLED AND BURLAPPED	EACH	6	0	0	0	0	6	0	0
B2003320	TREE, MALUS DONALD WYMAN (DONALD WYMAN CRABAPPLE), 2-1/2" CALIPER, TREE FORM, BALLED AND BURLAPPED	EACH	6	0	0	0	0	6	0	0
X0322906	WEEP HOLES CORED	EACH	3	0	3	0	0	0	0	0
X0322936	REMOVE EXISTING FLARED END SECTION	EACH	2	2	0	0	0	0	0	0
X0322939	RELOCATE EXISTING FLARED END SECTION	EACH	1	1	0	0	0	0	0	0
X0323261	TEMPORARY SEDIMENT BASIN	EACH	2	2	0	0	0	0	0	0
X0324045	SEDIMENT CONTROL, STABILIZED CONSTRUCTION ENTRANCE REMOVAL	EACH	2	2	0	0	0	0	0	0
X2130010	EXPLORATION TRENCH, SPECIAL	FOOT	200	200	0	0	0	0	0	0
X2501800	SEEDING, CLASS 4 (MODIFIED)	ACRE	0.50	0	0	0	0	0.50	0	0
X2501810	SEEDING, CLASS 5 (SPECIAL)	ACRE	0.25	0	0	0	0	0.25	0	0
X2501820	SEEDING, CLASS 5 (MODIFIED)	ACRE	0.50	0	0	0	0	0.50	0	0
X2502024	SEEDING, CLASS 4B (MODIFIED)	ACRE	0.25	0	0	0	0	0.25	0	0
X5091725	BICYCLE RAILING, SPECIAL	FOOT	113	0	0	113	0	0	0	0
X5610004	DUCTILE IRON WATER MAIN FITTINGS	POUND	2,670	0	0	0	0	0	0	2,670
X5610700	WATER MAIN REMOVAL	FOOT	134	0	0	0	0	0	0	134
X6064200	COMBINATION CONCRETE CURB AND GUTTER, TYPE B-6.12 (SPECIAL)	FOOT	279	279	0	0	0	0	0	0
X7010216	TRAFFIC CONTROL AND PROTECTION, (SPECIAL)	L SUM	1	1	0	0	0	0	0	0
XX003536	CONNECTION TO EXISTING WATER MAIN (NON PRESSURE)	EACH	3	0	0	0	0	0	0	3
XX008743	STORM SEWERS, CLASS B, TYPE 1 8"	FOOT	8	8	0	0	0	0	0	0

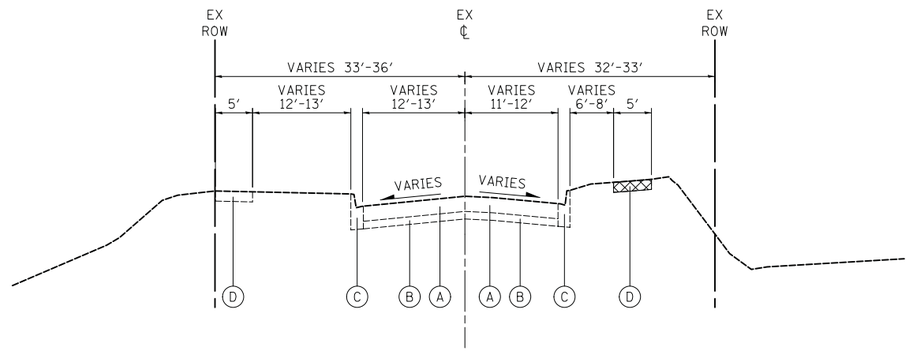

DEERPATH ROAD – EXISTING TYPICAL SECTION

STA. 100+00 TO STA. 102+87.65

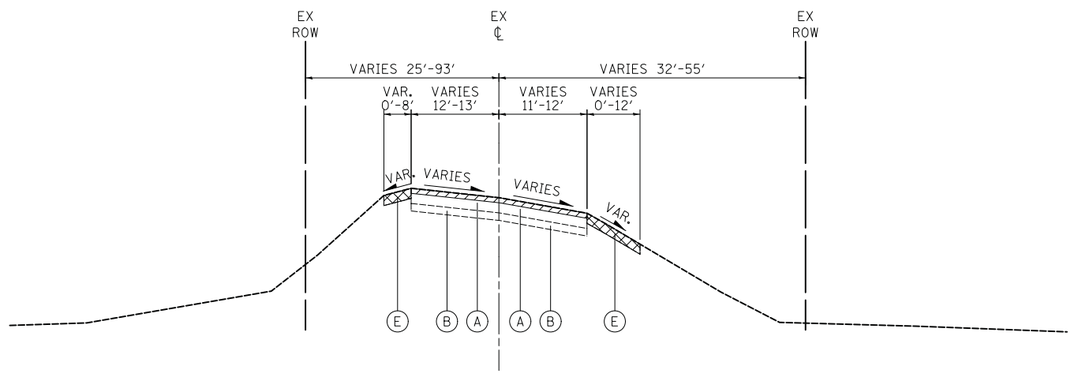

DEERPATH ROAD – EXISTING TYPICAL SECTION

STA. 102+87.65 TO STA. 104+30
STA. 106+50 TO STA. 108+47.69

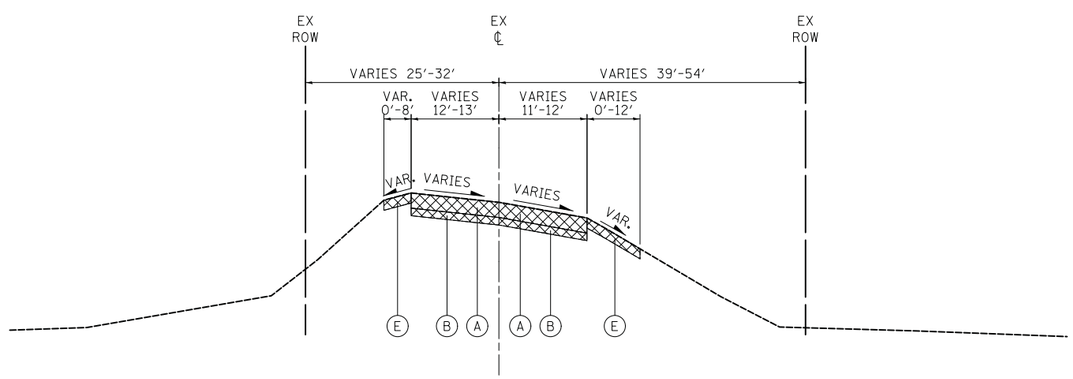

DEERPATH ROAD – EXISTING TYPICAL SECTION

STA. 104+30 TO STA. 104+81.57
STA. 105+35.57 TO STA. 106+50
STRUCTURE TYPICAL SECTION OMITTED (SEE NOTE 1)

LEGEND

- (A) EXISTING HMA PAVEMENT, VARIES 5¼" TO 6¼"
- (B) EXISTING GRANULAR BASE COURSE, VARIES 2½" TO 3"
- (C) EXISTING CURB AND GUTTER, TYPE B-6.12
- (D) EXISTING PCC SIDEWALK
- (E) EXISTING AGGREGATE SHOULDER

HOT-MIX ASPHALT SURFACE REMOVAL, 2"

PAVEMENT REMOVAL
SIDEWALK REMOVAL
REMOVAL OF ITEMS B & E (SEE NOTE 2)

NOTES

1. THE STATION RANGE FOR THE STRUCTURE HAS BEEN OMITTED FROM THESE TYPICAL SECTIONS. SEE STRUCTURE PLANS FOR STRUCTURE REMOVAL DETAILS.
2. THE REMOVAL OF ITEMS B & E IS PAID FOR AS "EARTH EXCAVATION".

PLOT DRIVER = ...\mjp\dms60314\ce1.pdf.plt
PEN TABLE = ...\pentbl\ce1.idot.general.tbl
FILE NAME = ...\2637-sht-typical01.dgn

CIVILTECH	USER NAME = mjp	DESIGNED - MJP	REVISED -	STATE OF ILLINOIS DEPARTMENT OF TRANSPORTATION	DEERPATH ROAD OVER MILL CREEK EXISTING TYPICAL SECTIONS
		DRAWN - MJP	REVISED -		
	PLOT SCALE = 1.0000 ' / in.	CHECKED - DNM	REVISED -		
	PLOT DATE = 10/10/2015	DATE - 10/12/15	REVISED -		SCALE: N.T.S. SHEET OF SHEETS STA. TO STA.

F.A.U. RTE.	SECTION	COUNTY	TOTAL SHEETS	SHEET NO.
2327	07-00068-00-BR	KANE	78	9
		CONTRACT NO. 61A88		
		ILLINOIS FED. AID PROJECT		

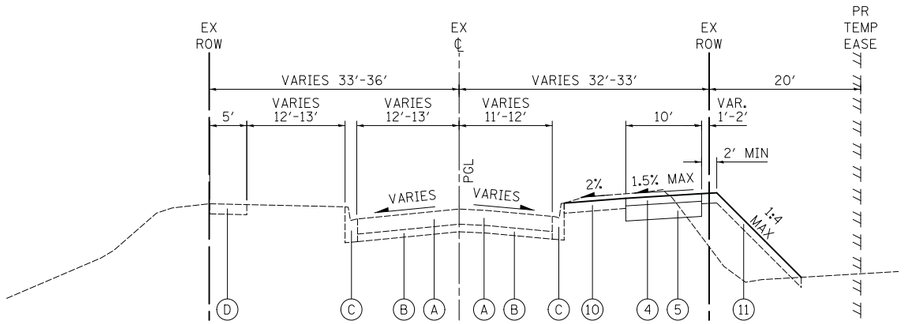

DEERPATH ROAD – PROPOSED TYPICAL SECTION

STA. 100+00 TO STA. 102+87.65

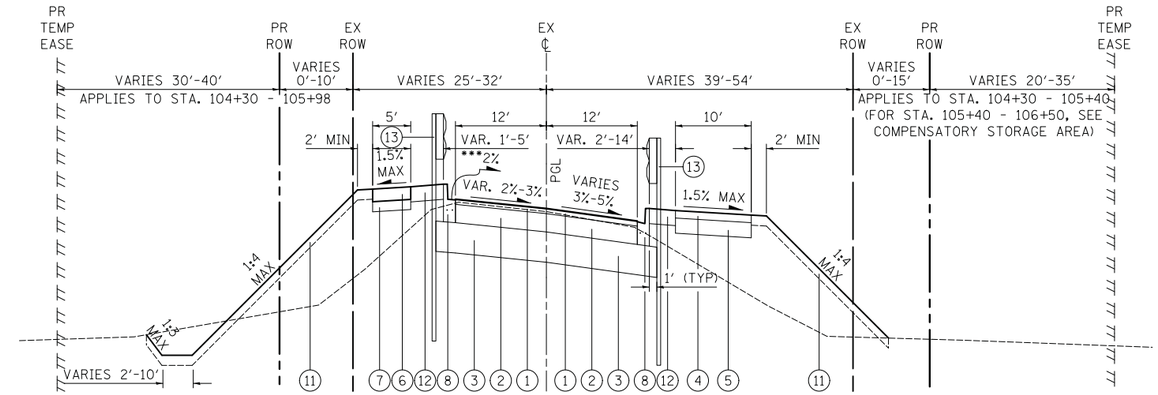

DEERPATH ROAD – PROPOSED TYPICAL SECTION (RECONSTRUCTION)

STA. 104+30 TO STA. 104+66.06
STA. 105+51.07 TO STA. 106+50
STRUCTURE TYPICAL SECTION OMITTED (SEE NOTE 1)
***WHEN PAVEMENT IS SUPERELEVATED, PITCH OUT GUTTER AT A SLOPE OF 2%

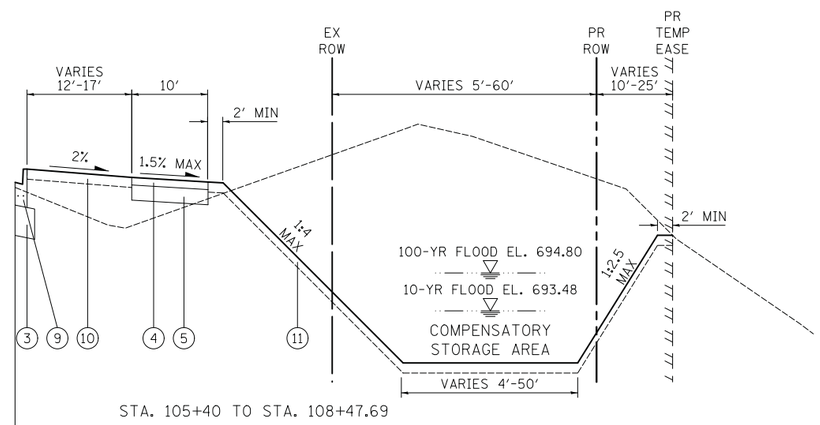

STA. 105+40 TO STA. 108+47.69

HOT-MIX ASPHALT MIXTURE REQUIREMENTS	
MIXTURE TYPE	AIR VOIDS @ NDES
PAVEMENT RESURFACING	
HOT-MIX ASPHALT SURFACE COURSE, MIX "D", N50 (IL 9.5 mm); 2"	4% @ 50 GYR.
†LEVELING BINDER (MACHINE METHOD), N50 (IL 9.5 mm)	4% @ 50 GYR.
PAVEMENT RECONSTRUCTION (FULL-DEPTH)	
HOT-MIX ASPHALT SURFACE COURSE, MIX "D", N50 (IL 9.5 mm); 2"	4% @ 50 GYR.
HOT-MIX ASPHALT BINDER COURSE, IL-19.0, N50; 7"	4% @ 50 GYR.
CLASS D PATCHES	
CLASS D PATCH (HMA BINDER IL-19.0 mm)	4% @ 70 GYR.
HOT-MIX ASPHALT SHOULDERS	
HOT-MIX ASPHALT SURFACE COURSE, MIX "D", N50 (IL 9.5 mm); 3"	4% @ 50 GYR.
HMA SHOULDER (HMA BINDER IL-19.0 mm); 3"	4% @ 50 GYR.
HOT-MIX ASPHALT DRIVEWAY PAVEMENT AND BIKE PATH	
HOT-MIX ASPHALT SURFACE COURSE, MIX "D", N50 (IL 9.5 mm); 3"	4% @ 50 GYR.

THE UNIT WEIGHT USED TO CALCULATE ALL HOT-MIX ASPHALT MIXTURES IS 112 LB/SQ YD/IN. FOR HMA FULL-DEPTH "AC TYPE" AND USE OF RECYCLED MATERIALS, SEE SPECIAL PROVISIONS. THE "AC-TYPE" FOR NON-POLYMERIZED HMA MIXES SHALL BE "PG 64-22" UNLESS MODIFIED BY DISTRICT ONE SPECIAL PROVISIONS.

†FOR USE OF LEVELING BINDER, SEE LEVELING BINDER NOTE CALL-OUT IN PROFILE VIEW OF THE ROADWAY PLAN AND PROFILE SHEETS.

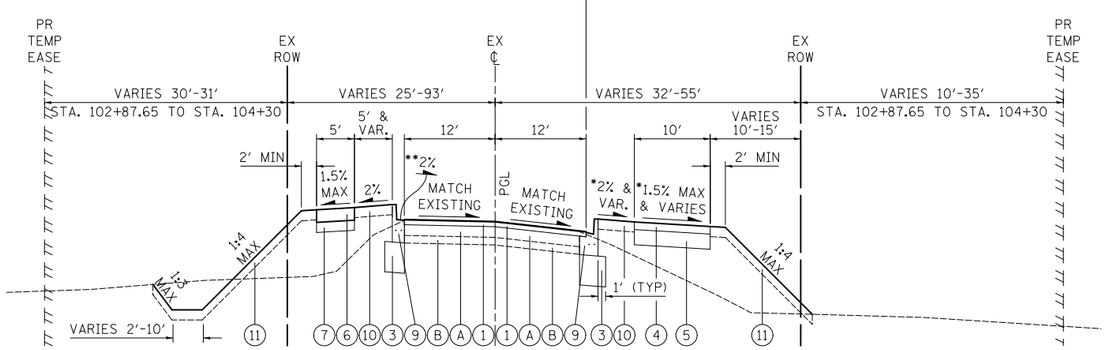

DEERPATH ROAD – PROPOSED TYPICAL SECTION (RESURFACING)

STA. 102+87.65 TO STA. 104+30
STA. 106+50 TO STA. 108+47.69
*TRANSITION BIKE PATH FROM PITCHING TOWARDS ROADWAY TO PITCHING AWAY FROM ROADWAY BETWEEN STA. 103+25 AND STA. 103+75
**WHEN PAVEMENT IS SUPERELEVATED, PITCH OUT GUTTER AT A SLOPE OF 2%

LEGEND

- (A) EXISTING HMA PAVEMENT, VARIES 5¼" TO 6¼"
- (B) EXISTING GRANULAR BASE COURSE, VARIES 2½" TO 3"
- (C) EXISTING CURB AND GUTTER, TYPE B-6.12
- (D) EXISTING PCC SIDEWALK
- ††(1) HOT-MIX ASPHALT SURFACE COURSE, MIX "D", N50, 2"
- ††(2) HOT-MIX ASPHALT BINDER COURSE, IL-19.0, N50, 7"
- (3) AGGREGATE SUBGRADE IMPROVEMENT 12"
- (4) HOT-MIX ASPHALT SURFACE COURSE, MIX "D", N50, 3"
- (5) AGGREGATE BASE COURSE, TYPE B 6"
- (6) PORTLAND CEMENT CONCRETE SIDEWALK 5 INCH
- (7) AGGREGATE BASE COURSE, TYPE B 4"
- (8) COMBINATION CONCRETE CURB AND GUTTER, TYPE B-6.12 (SPECIAL)
- (9) COMBINATION CONCRETE CURB AND GUTTER, TYPE B-6.12 (MODIFIED) (SEE NOTE 2)
- (10) TOPSOIL FURNISH AND PLACE, 6" SODDING, SALT TOLERANT
- (11) TOPSOIL FURNISH AND PLACE, 6" SEEDING
- (12) HOT-MIX ASPHALT SHOULDERS, 6"
- (13) STEEL PLATE BEAM GUARDRAIL (TYPE AS NOTED ON PLANS)

††ITEMS NO. 1 & 2 WILL BE MEASURED IN SQUARE YARDS AND WILL BE PAID FOR AS HOT-MIX ASPHALT PAVEMENT (FULL-DEPTH), 9" FOR THE RECONSTRUCTION SECTION

NOTES

1. THE STATION RANGE FOR THE STRUCTURE HAS BEEN OMITTED FROM THESE TYPICAL SECTIONS. SEE STRUCTURE PLANS FOR PROPOSED STRUCTURAL DETAILS.
2. FOR COMBINATION CONCRETE CURB AND GUTTER, TYPE B-6.12 (MODIFIED) DETAILS, SEE SHEET NO. 54.

PLOT DRIVER = ...\mjp\dms00314\ce1.pdf.plt
PEN TABLE = ...\pentbl\ce1.idot-general.tbl
FILE NAME = ...\2637-sht-typicals02.dgn

CIVILTECH

USER NAME = mjp	DESIGNED - MJP	REVISED -	
	DRAWN - MJP	REVISED -	
PLOT SCALE = 1.0000 ' / in.	CHECKED - DNM	REVISED -	
PLOT DATE = 10/10/2015	DATE - 10/12/15	REVISED -	

STATE OF ILLINOIS
DEPARTMENT OF TRANSPORTATION

DEERPATH ROAD OVER MILL CREEK
PROPOSED TYPICAL SECTIONS

SCALE: N.T.S. | SHEET OF SHEETS | STA. TO STA.

F.A.U. RTE.	SECTION	COUNTY	TOTAL SHEETS	SHEET NO.
2327	07-00068-00-BR	KANE	78	10

CONTRACT NO. 61A88

ILLINOIS FED. AID PROJECT

EARTHWORK SCHEDULES

DEERPATH ROAD - EARTHWORK SCHEDULE

STATION	DISTANCE	EARTH EXCAVATION	EMBANKMENT	UNSUITABLE MATERIAL	EARTH EXCAVATION	EMBANKMENT	UNSUITABLE MATERIAL	EARTH EX SHRINKAGE (15%)	EARTHWORK BALANCE WASTE (+) OR SHORTAGE (-)
	(FT)	(SQ FT)	(SQ FT)	(SQ FT)	(CU YD)	(CU YD)	(CU YD)	(CU YD)	(CU YD)
100+30		37.8	0.3	0.0					
	20				17.9	4.2	0.0	15.2	11.0
100+50		10.4	11.1	0.0					
	50				25.4	10.3	0.0	21.6	11.3
101+00		17.0	0.0	0.0					
	50				38.7	0.3	0.0	32.9	32.6
101+50		24.8	0.3	0.0					
	50				48.8	0.3	0.0	41.4	41.2
102+00		27.9	0.0	0.0					
	50				38.3	8.2	0.0	32.6	24.4
102+50		13.5	8.8	0.0					
	37.65				27.3	44.0	0.0	23.2	-20.8
102+87.65		25.6	54.4	0.0					
	12.35				13.7	25.1	0.0	11.7	-13.4
103+00		34.5	55.5	0.0					
	50				55.8	102.4	0.0	47.5	-54.9
103+50		25.8	55.1	0.0					
	50				51.2	87.6	0.0	43.5	-44.1
104+00		29.5	39.6	0.0					
	30				48.0	52.3	0.0	40.8	-11.5
104+30		57.0	54.6	0.0					
	20				40.9	48.1	0.0	34.8	-13.3
104+50		53.5	75.3	0.0					
	16.06				36.2	45.8	0.0	30.7	-15.0
104+66.06		68.1	78.6	0.0					
	15.01				29.4	21.9	0.0	25.0	3.2
104+81.07		37.8	0.0	0.0					
	27.50				182.9	0.0	0.0	155.5	155.5
105+08.57		0.0	0.0	0.0					
	27.50				2.2	0.5	0.0	1.9	1.3
105+36.07		4.3	1.0	0.0					
	15.00				12.0	21.4	12.9	10.2	-11.3
105+51.07		38.9	76.2	46.3					
	23.93				116.2	53.5	55.9	98.7	45.2
105+75		223.3	44.6	79.9					
	25				252.2	31.3	88.4	214.3	183.0
106+00		321.4	23.0	111.1					
	25				273.3	21.1	216.7	232.3	211.2
106+25		268.8	22.6	357.0					
	25				256.3	23.6	399.7	217.9	194.2
106+50		284.8	28.5	506.2					
	25				301.9	28.2	468.7	256.6	228.4
106+75		367.2	32.3	506.1					
	25				361.4	33.1	456.6	307.2	274.1
107+00		413.4	39.2	480.1					
	25				393.0	36.6	429.7	334.0	297.5
107+25		435.4	39.8	448.1					
	25				391.6	33.5	388.1	332.8	299.3
107+50		410.4	32.6	390.3					
	20				219.3	25.6	254.9	186.4	160.8
107+70		181.7	36.5	297.9					
	18.23				77.6	17.4	150.0	66.0	48.5
107+88.23		48.2	15.1	146.3					
	11.77				16.5	6.6	31.9	14.0	7.3
108+00		27.4	15.4	0.0					
	47.69				58.8	18.0	0.0	50.0	32.1
108+47.69		39.3	5.0	0.0					
				SUB-TOTAL=	3,386.6	801.0	2,953.5	2,878.6	2,077.6
				DRIVEWAY APRONS=	7.0		0.0		
				CONTINGENCY=	0.0		100.0		
				4" TOPSOIL STRIP=			452.0		
				DEERPATH ROAD TOTAL=	**3,393.6**		**3,505.5**		

NOTES

1. A CONTINGENCY QUANTITY OF 100 CU YD HAS BEEN ADDED TO THE "REMOVAL AND DISPOSAL OF UNSUITABLE MATERIAL" IF FOUND IN THE PAVEMENT RECONSTRUCTION AREA. THE CORRESPONDING CONTINGENCY QUANTITIES HAVE BEEN ADDED TO THE SUMMARY OF QUANTITIES IF UNSUITABLE MATERIAL IS REMOVED IN THE PAVEMENT RECONSTRUCTION AREA:
   -GEOTECHNICAL FABRIC FOR GROUND STABILIZATION
   -AGGREGATE SUBGRADE IMPROVEMENT

2. THE TOPSOIL FOUND IN THE COMPENSATORY STORAGE AREA HAS BEEN INCLUDED IN THE END AREAS OF THE EARTHWORK SCHEDULE. ALL AREAS OUTSIDE THE COMPENSATORY STORAGE AREA HAVE BEEN ASSUMED TO HAVE AN EXISTING TOPSOIL DEPTH OF 4 INCHES. THE VOLUME OF 4" TOPSOIL STRIPPING HAS BEEN INCLUDED AS A SINGLE LINE ITEM FOR "REMOVAL AND DISPOSAL OF UNSUITABLE MATERIAL".

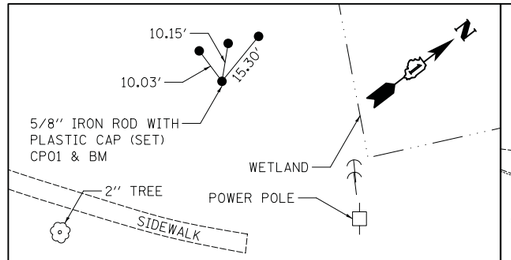

ALL TIES ARE A 5/8" IRON ROD WITH PLASTIC CAP

(NOT TO SCALE)

CONTROL POINT 01 & BENCHMARK

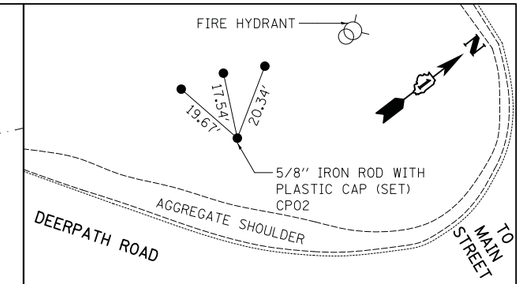

ALL TIES ARE A 5/8" IRON ROD WITH PLASTIC CAP

(NOT TO SCALE)

CONTROL POINT 02

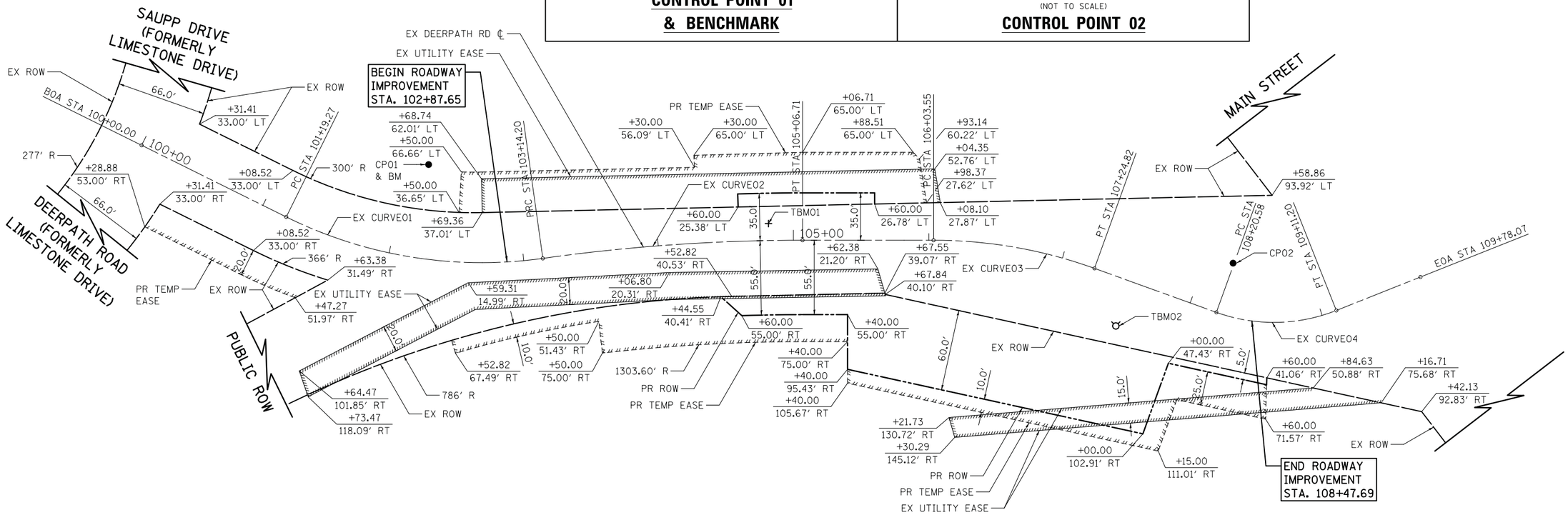

EX CURVE01

PI STA. = 102+19.77
Δ = 34° 21' 55" (LT)
D = 17° 37' 46"
R = 325.00'
T = 100.50'
L = 194.93'
E = 15.18'
P.C. STA. = 101+19.27
P.T. STA. = 103+14.20

EX CURVE02

PI STA. = 104+10.61
Δ = 8° 00' 03" (RT)
D = 4° 09' 22"
R = 1,378.60'
T = 96.41'
L = 192.51'
E = 3.37'
P.C. STA. = 103+14.20
P.T. STA. = 105+06.71

EX CURVE03

PI STA. = 106+64.80
Δ = 19° 51' 03" (RT)
D = 16° 22' 13"
R = 350.00'
T = 61.24'
L = 121.26'
E = 5.32'
P.C. STA. = 106+03.55
P.T. STA. = 107+24.82

EX CURVE04

PI STA. = 108+67.98
Δ = 41° 32' 13" (LT)
D = 45° 50' 12"
R = 125.00'
T = 47.40'
L = 90.62'
E = 8.69'
P.C. STA. = 108+20.58
P.T. STA. = 109+11.20

EXISTING DEERPATH ROAD CENTERLINE

DESCRIPTION	STATION	NORTHING	EASTING
B.O.A.	100+00.00	1,886,067.3771	979,601.2254
P.C.	101+19.27	1,886,119.9469	979,708.2856
P.I.	102+19.77	1,886,164.2418	979,798.4936
P.R.C.	103+14.20	1,886,251.7246	979,847.9533
P.I.	104+10.61	1,886,335.6507	979,895.4022
P.T.	105+06.71	1,886,412.1555	979,954.0704
P.C.	106+03.55	1,866,489.0058	980,013.0036
P.I.	106+64.80	1,886,537.6056	980,050.2727
P.T.	107+24.82	1,886,570.6620	980,101.8304
P.C.	108+20.58	1,886,622.3491	980,182.4462
P.I.	108+67.98	1,886,647.9353	980,222.3526
P.T.	109+11.20	1,886,693.5494	980,235.2574
E.O.A.	109+78.07	1,886,757.8959	980,253.4619

BENCHMARK AND CONTROL POINT INFORMATION

BM / CP	STATION	OFFSET	NORTHING	EASTING	ELEVATION	DESCRIPTION
TBM01	104+81.76	12.54' LT	-	-	695.26	BOX CUT (FOUND) IN SOUTHWEST CORNER OF PARAPET WALL OF DEERPATH ROAD BRIDGE OVER MILL CREEK
TBM02	107+54.13	34.68' RT	-	-	703.30	CROSS CUT (SET) IN NORTHEAST FLANGE BOLT OF FIRE HYDRANT
CP01 & BM	102+18.82	69.49' LT	1,886,226.9576	979,741.5759	701.56	5/8" IRON ROD WITH PLASTIC CAP (SET) LOCATED ON WEST SIDE OF DEERPATH ROAD JUST WEST OF THE END-OF-SIDEWALK AND POWER POLE
CP02	108+19.83	38.41' LT	1,886,654.2830	980,161.0830	-	5/8" IRON ROD WITH PLASTIC CAP (SET) LOCATED SOUTHWEST OF THE INTERSECTION OF DEERPATH ROAD AND MAIN STREET JUST SOUTH OF FIRE HYDRANT

BASIS OF COORDINATES

COORDINATES ARE BASED ON THE ILLINOIS STATE PLANE COORDINATE SYSTEM (NAD 83).

BASIS OF ELEVATIONS

ELEVATIONS ARE BASED ON MULTIPLE GPS RTK OBSERVATIONS MEASURED AT CONTROL POINT 01 ON JANUARY 4, 2010, AS SHOWN HEREON: ELEVATION 701.56 (NAVD 1988).

PLOT DRIVER = ...\mjp\dms0314\ce1.pdf.plt
PEN TABLE = ...\pentbl\ce1.idot.general.tbl
FILE NAME = ...\2837-sht-AT801.dgn

CIVILTECH

USER NAME = mjp	DESIGNED - MJP	REVISED -
	DRAWN - MJP	REVISED -
PLOT SCALE = 40.0000 ' / in.	CHECKED - DNM	REVISED -
PLOT DATE = 10/10/2015	DATE - 10/12/15	REVISED -

STATE OF ILLINOIS
DEPARTMENT OF TRANSPORTATION

DEERPATH ROAD OVER MILL CREEK
ALIGNMENT, TIES AND BENCHMARKS

SCALE: 1" = 40' | SHEET OF SHEETS | STA. TO STA.

F.A.U. RTE.	SECTION	COUNTY	TOTAL SHEETS	SHEET NO.
2327	07-00068-00-BR	KANE	78	12

CONTRACT NO. 61A88

ILLINOIS FED. AID PROJECT

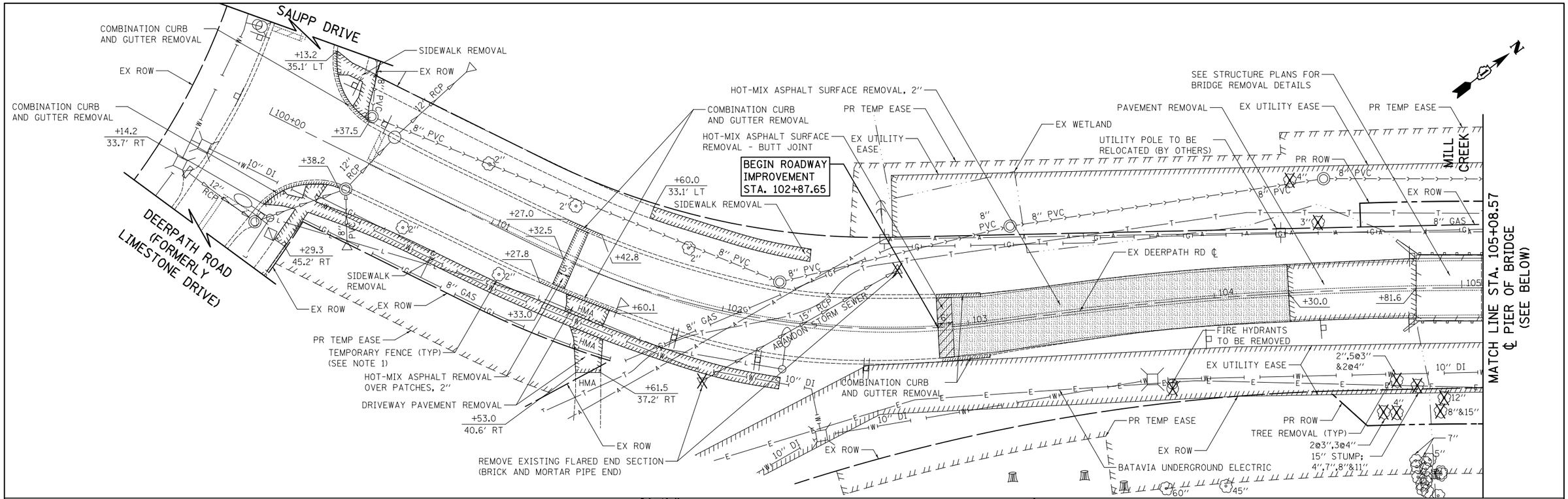

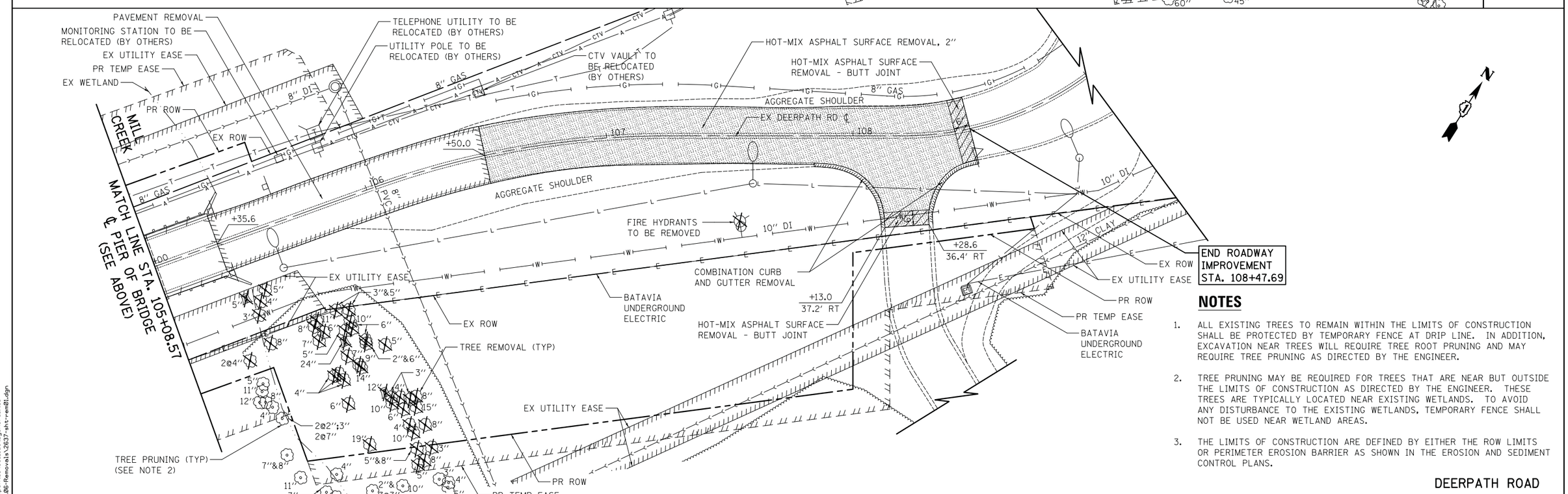

NOTES

1. ALL EXISTING TREES TO REMAIN WITHIN THE LIMITS OF CONSTRUCTION SHALL BE PROTECTED BY TEMPORARY FENCE AT DRIP LINE. IN ADDITION, EXCAVATION NEAR TREES WILL REQUIRE TREE ROOT PRUNING AND MAY REQUIRE TREE PRUNING AS DIRECTED BY THE ENGINEER.

2. TREE PRUNING MAY BE REQUIRED FOR TREES THAT ARE NEAR BUT OUTSIDE THE LIMITS OF CONSTRUCTION AS DIRECTED BY THE ENGINEER. THESE TREES ARE TYPICALLY LOCATED NEAR EXISTING WETLANDS. TO AVOID ANY DISTURBANCE TO THE EXISTING WETLANDS, TEMPORARY FENCE SHALL NOT BE USED NEAR WETLAND AREAS.

3. THE LIMITS OF CONSTRUCTION ARE DEFINED BY EITHER THE ROW LIMITS OR PERIMETER EROSION BARRIER AS SHOWN IN THE EROSION AND SEDIMENT CONTROL PLANS.

DEERPATH ROAD

PLOT DRIVER = ...\mjp\dms00314\ces.pdf.plt
PEN TABLE = ...\pentbl\ces.idot.general.tbl
FILE NAME = ...\06-Removals\2637-sht-rem01.dgn

CIVILTECH

USER NAME = mjp	DESIGNED - MJP	REVISED -
	DRAWN - MJP	REVISED -
PLOT SCALE = 20.0000 ' / in.	CHECKED - DNM	REVISED -
PLOT DATE = 10/10/2015	DATE - 10/12/15	REVISED -

STATE OF ILLINOIS
DEPARTMENT OF TRANSPORTATION

DEERPATH ROAD OVER MILL CREEK
ROADWAY, DRAINAGE AND UTILITIES REMOVAL PLAN

SCALE: 1" = 20' | SHEET OF SHEETS | STA. TO STA.

F.A.U. RTE.	SECTION	COUNTY	TOTAL SHEETS	SHEET NO.
2327	07-00068-00-BR	KANE	78	13
		CONTRACT NO. 61A88		
		ILLINOIS FED. AID PROJECT		

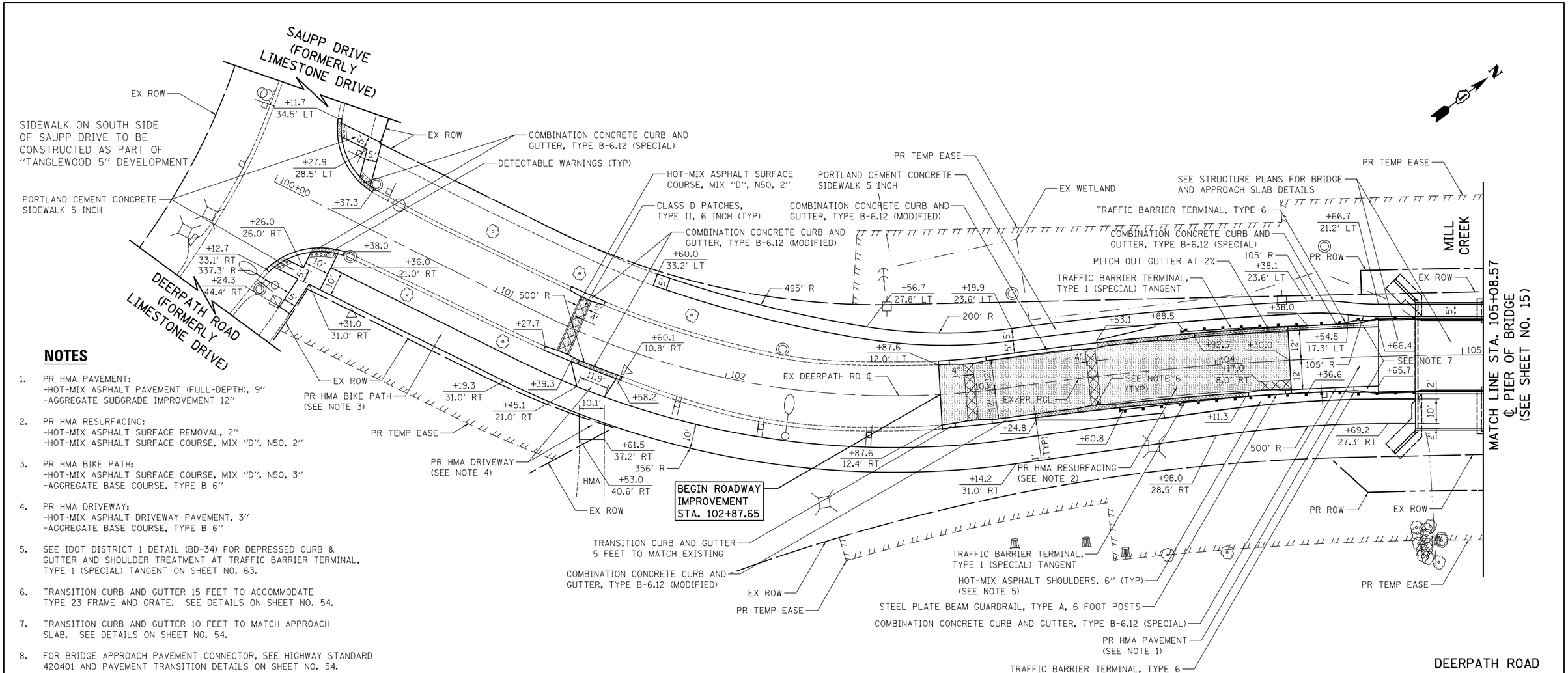

NOTES

1. PR HMA PAVEMENT:
   -HOT-MIX ASPHALT PAVEMENT (FULL-DEPTH), 9"
   -AGGREGATE SUBGRADE IMPROVEMENT 12"

2. PR HMA RESURFACING:
   -HOT-MIX ASPHALT SURFACE REMOVAL, 2"
   -HOT-MIX ASPHALT SURFACE COURSE, MIX "D", N50, 2"

3. PR HMA BIKE PATH:
   -HOT-MIX ASPHALT SURFACE COURSE, MIX "D", N50, 3"
   -AGGREGATE BASE COURSE, TYPE B 6"

4. PR HMA DRIVEWAY:
   -HOT-MIX ASPHALT DRIVEWAY PAVEMENT, 3"
   -AGGREGATE BASE COURSE, TYPE B 6"

5. SEE IDOT DISTRICT 1 DETAIL (BD-34) FOR DEPRESSED CURB & GUTTER AND SHOULDER TREATMENT AT TRAFFIC BARRIER TERMINAL, TYPE 1 (SPECIAL) TANGENT ON SHEET NO. 63.

6. TRANSITION CURB AND GUTTER 15 FEET TO ACCOMMODATE TYPE 23 FRAME AND GRATE. SEE DETAILS ON SHEET NO. 54.

7. TRANSITION CURB AND GUTTER 10 FEET TO MATCH APPROACH SLAB. SEE DETAILS ON SHEET NO. 54.

8. FOR BRIDGE APPROACH PAVEMENT CONNECTOR, SEE HIGHWAY STANDARD 420401 AND PAVEMENT TRANSITION DETAILS ON SHEET NO. 54.

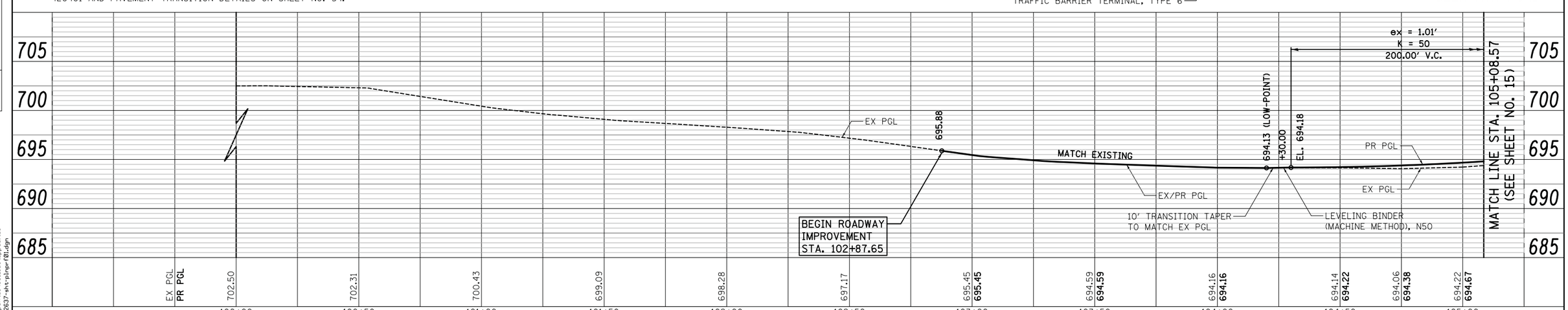

PLAN — SURVEYED / PLOTTED / ALIGNMENT CHECKED / RT. OF WAY CHECKED / CADD FILE NAME — NOTE BOOK NO. ____ — BY — DATE

PROFILE — SURVEYED / PLOTTED / GRADES CHECKED / B.M. NOTED / STRUCTURE NOTAT'NS CHKD — NOTE BOOK NO. ____ — BY — DATE

PLOT DRIVER = ...\mjp\dms00314\cen.pdf.plt
PEN TABLE = ...\pentbl\cei.idot.ppdu.tbl
FILE NAME = ...\2637-sht-plnprf01.dgn

CIVILTECH

USER NAME = mjp	DESIGNED - MJP	REVISED -
	DRAWN - MJP	REVISED -
PLOT SCALE = 20.0000 ' / in.	CHECKED - DNM	REVISED -
PLOT DATE = 10/10/2015	DATE - 10/12/15	REVISED -

STATE OF ILLINOIS
DEPARTMENT OF TRANSPORTATION

DEERPATH ROAD OVER MILL CREEK
ROADWAY PLAN AND PROFILE

SCALE: 1" = 20' | SHEET OF SHEETS | STA. 102+87.65 TO STA. 105+08.57

F.A.U. RTE.	SECTION	COUNTY	TOTAL SHEETS	SHEET NO.
2327	07-00068-00-BR	KANE	78	14

CONTRACT NO. 61A88

ILLINOIS FED. AID PROJECT

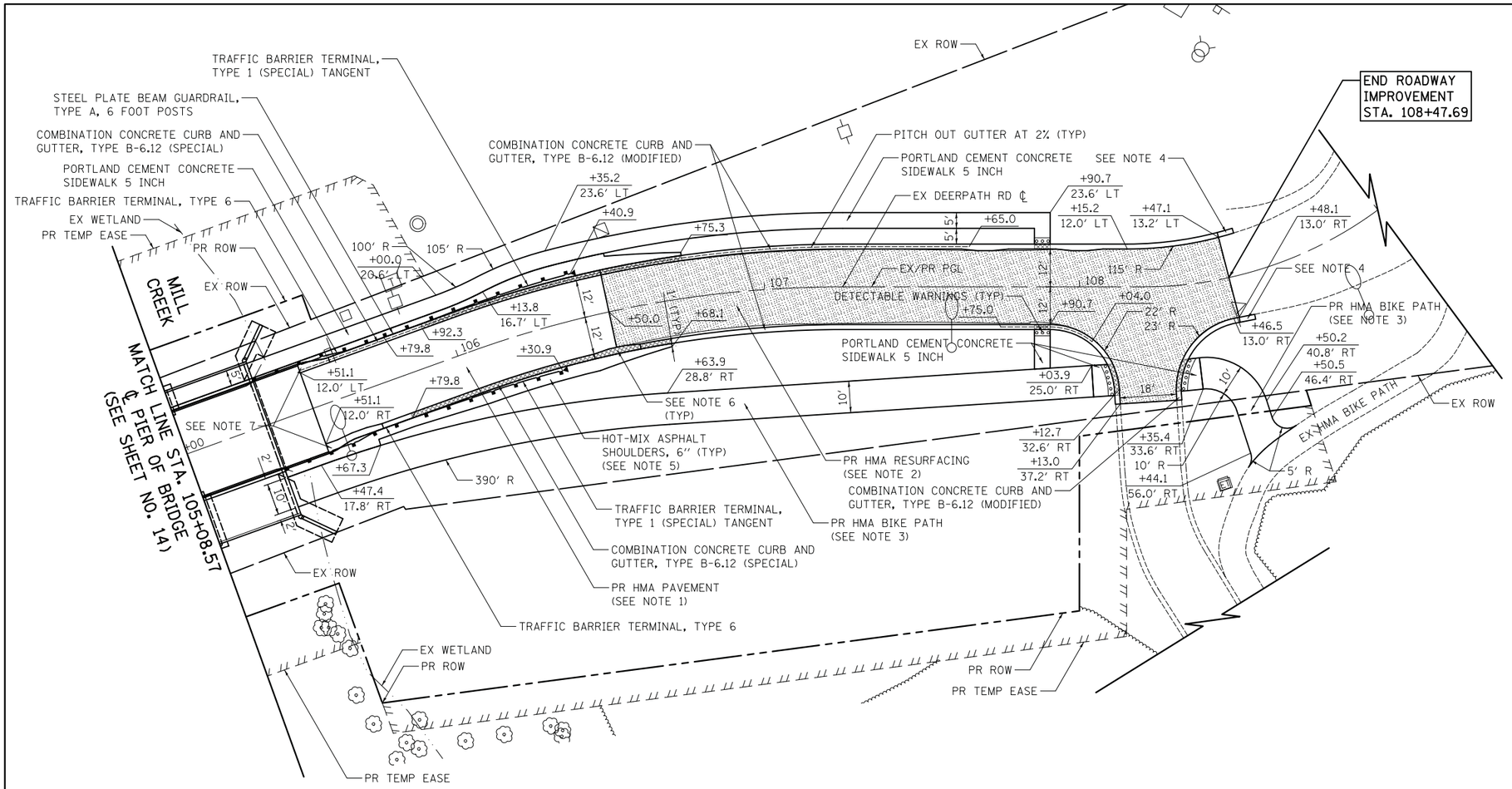

NOTES

1. PR HMA PAVEMENT:
   -HOT-MIX ASPHALT PAVEMENT (FULL-DEPTH), 9"
   -AGGREGATE SUBGRADE IMPROVEMENT 12"
2. PR HMA RESURFACING:
   -HOT-MIX ASPHALT SURFACE REMOVAL, 2"
   -HOT-MIX ASPHALT SURFACE COURSE, MIX "D", N50, 2"
3. PR HMA BIKE PATH:
   -HOT-MIX ASPHALT SURFACE COURSE, MIX "D", N50, 3"
   -AGGREGATE BASE COURSE, TYPE B 6"
4. TRANSITION CURB HEIGHT FROM 6" TO 0" OVER A LENGTH OF 5 FEET.
5. SEE IDOT DISTRICT 1 DETAIL (BD-34) FOR DEPRESSED CURB & GUTTER AND SHOULDER TREATMENT AT TRAFFIC BARRIER TERMINAL, TYPE 1 (SPECIAL) TANGENT ON SHEET NO. 63.
6. TRANSITION CURB AND GUTTER 15 FEET TO ACCOMMODATE TYPE 23 FRAME AND GRATE. SEE DETAILS ON SHEET NO. 54.
7. TRANSITION CURB AND GUTTER 10 FEET TO MATCH APPROACH SLAB. SEE DETAILS ON SHEET NO. 54.
8. FOR BRIDGE APPROACH PAVEMENT CONNECTOR, SEE HIGHWAY STANDARD 420401 AND PAVEMENT TRANSITION DETAILS ON SHEET NO. 54.

DEERPATH ROAD

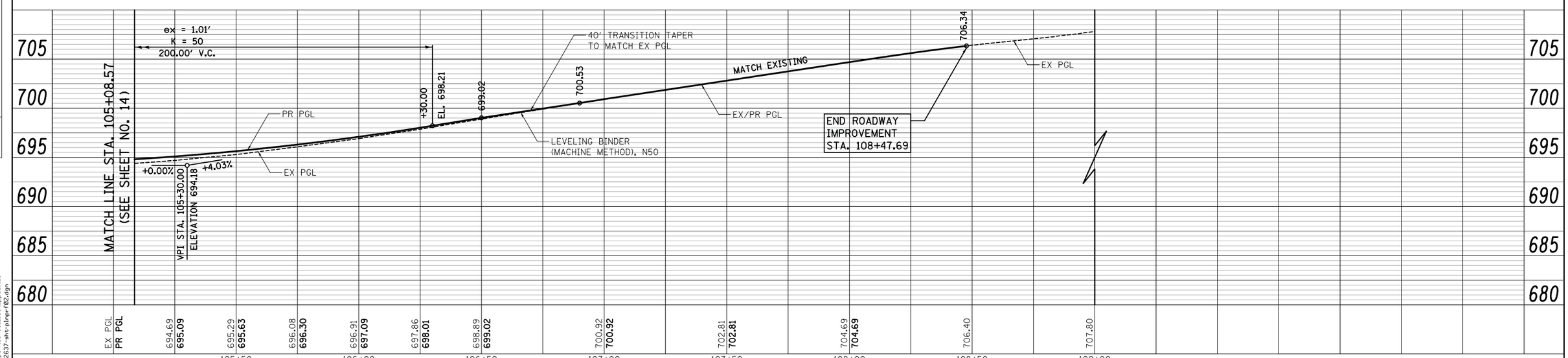

CIVILTECH	USER NAME = mjp	DESIGNED - MJP	REVISED -
		DRAWN - MJP	REVISED -
	PLOT SCALE = 20.0000 ' / in.	CHECKED - DNM	REVISED -
	PLOT DATE = 10/10/2015	DATE - 10/12/15	REVISED -

STATE OF ILLINOIS
DEPARTMENT OF TRANSPORTATION

DEERPATH ROAD OVER MILL CREEK
ROADWAY PLAN AND PROFILE

SCALE: 1" = 20' | SHEET OF SHEETS | STA. 105+08.57 TO STA. 108+47.69

F.A.U. RTE.	SECTION	COUNTY	TOTAL SHEETS	SHEET NO.
2327	07-00068-00-BR	KANE	78	15
		CONTRACT NO. 61A88		
		ILLINOIS FED. AID PROJECT		

PLAN: SURVEYED / PLOTTED / ALIGNMENT CHECKED / RT. OF WAY CHECKED / CADD FILE NAME / NOTE BOOK NO. / BY / DATE

PROFILE: SURVEYED / PLOTTED / PROFILE CHECKED / BLM. NOTED / STRUCTURE NOTATNS CHKD / NOTE BOOK NO. / BY / DATE

PLOT DRIVER = ...\mjp\dms60314\ceu.pdf.plt
PEN TABLE = ...\pentbl\ceu.idot.ppdu.tbl
FILE NAME = ...\2637-sht-plnprf02.dgn

SCHEDULE OF SIGNS

SIGN NO.		SIGN TYPE
A	NORTH	M3-1(0)-2412
B	SOUTH	M3-3(0)-2412
C	Deerpath Rd	W17-I101-2409
D	ROAD CLOSED	R11-2-4830
E	END DETOUR	M4-8A(0)-2418
F	ROAD CLOSED AHEAD	W20-3(0)-4848 WITH AMBER FLASHING LIGHT
G	DETOUR AHEAD	W20-2-4848 WITH AMBER FLASHING LIGHT
H	DETOUR ←	M4-9L(0)-3024
I	DETOUR →	M4-9R(0)-3024
J	DETOUR ↑	M4-9(0)-3030
K	DETOUR	M4-9L(0)-3030
L	DETOUR	M4-9R(0)-3030
M	ROAD CLOSED TO THRU TRAFFIC	R11-4-3624
N	Deerpath Rd BRIDGE CLOSED	SPECIAL(0)-3018
O	BRIDGE OUT	R11-2-4830
P	DETOUR	M4-10L-4818
Q	DETOUR	M4-10R-4818

LEGEND

- SIGN POST
- CONSTRUCTION WORK ZONE
- DETOUR ROUTE
- *TYPE III BARRICADE

DETOUR GENERAL NOTES

1. THE ENGINEER SHALL BE NOTIFIED IN WRITING AT LEAST 14 CALENDAR DAYS PRIOR TO THE DAY THE DETOUR IS TO BE IN EFFECT. THE CONTRACTOR SHALL CONTACT THE APPROPRIATE LOCAL AGENCIES AND INTERESTED PARTIES.
2. ALL SIGNING SHALL BE IN ACCORDANCE WITH THE APPLICABLE PROVISIONS OF THE STANDARD SPECIFICATIONS, THE DETAILS IN THESE PLANS, THE LATEST EDITION OF THE STATE OF ILLINOIS "MANUAL ON UNIFORM TRAFFIC CONTROL DEVICES," AND AS DIRECTED BY THE ENGINEER.
3. THE SIZES OF ALL SIGNS NOT SPECIFIED IN THESE PLANS SHALL BE AS REQUIRED BY THE ILLINOIS "MANUAL ON UNIFORM TRAFFIC CONTRL DEVICES."
4. ADDITIONAL SIGNING AND/OR BARRICADES DEEMED NECESSARY BY THE ENGINEER SHALL BE PROVIDED AND INSTALLED AT NO ADDITIONAL COST.
5. THE CONTRACTOR SHALL PROVIDE THE ENGINEER WITH THE NAMES AND PHONE NUMBERS OF HIS REPRESENTATIVES ON THE CONSTRUCTION SITE, AND HIS REPRESENTATIVE RESPONSIBLE FOR THE DETOUR SIGNING, SEVEN CALENDAR DAYS PRIOR TO THE START OF WORK.
6. THE CONTRACTOR SHALL BE RESPONSIBLE FOR THE FIELD LOCATION OF ALL DETOUR AND CONSTRUCTION SIGNING. THE CONTRACTOR MAY REQUEST THE ENGINEER TO FIELD VERIFY THE POSITIONS OF ANY SIGNS.
7. ACTUAL LOCATIONS FOR SIGNING SHOWN ON THE DETOUR PLANS MAY BE ADJUSTED TO FIT FIELD CONDITIONS.
8. ALL EXISTING SIGNING THAT IS NOT APPLICABLE WHILE THE DETOUR IS IN EFFECT SHALL BE COMPLETELY COVERED BY THE CONTRACTOR IN A MANNER MEETING THE APPROVAL OF THE ENGINEER.
9. ALL DETOUR SIGNING SHALL BE POST MOUNTED.
10. ALL DETOUR SIGNING EXCEPT REGULATORY SIGNS SHALL HAVE BLACK LEGENDS ON FLUORESCENT ORANGE SHEETING AND STANDARD BLACK BORDERS. THE FLUORESCENT ORANGE REFLECTIVE SHEETING SHALL MEET THE REQUIREMENTS OF ARTICLE 1106.01 OF THE STANDARD SPECIFICATIONS. ALL DETOUR SIGNING SHALL BE NEW OR IN LIKE-NEW CONDITION. THE ENGINEER SHALL BE THE SOLE JUDGE OF THE CONDITION OF THE SIGNS.
11. THE ROAD NAME SIGN SHALL BE A BLACK LEGEND ON ORANGE REFLECTIVE SHEETING. THE SIGN BLANK SHALL BE VARIABLE WITH 4 INCH DESIGN SERIES B LETTERS.
12. CHANGEABLE MESSAGE SIGNS SHALL BE USED AS DIRECTED BY THE ENGINEER. TWO CHANGEABLE MESSAGE SIGNS HAVE BEEN PROVIDED FOR THE DURATION OF THE PROJECT.
13. AT A MINIMUM, ALL AMBER FLASHING LIGHTS THAT ARE REQUIRED FOR THE DETOUR SIGNING SHALL MEET THE REQUIREMENTS FOR TYPE A-LOW INTENSITY FLASHING LIGHTS IN ARTICLE 1106.02 OF THE STANDARD SPECIFICATIONS. ALL LIGHTS SHALL OPERATE DURING HOURS OF DARKNESS. ONLY LIGHTS THAT HAVE BEEN APPROVED BY THE ILLINOIS DEPARTMENT OF TRANSPORTATION SHALL BE USED.
14. THE CONTRACTOR SHALL BE RESPONSIBLE FOR ENSURING THAT ALL BARRICADES, SIGNS, LIGHTS AND OTHER DEVICES INSTALLED BY HIM ARE IN PLACE AND OPERATING 24 HOURS EACH DAY, INCLUDING SUNDAYS AND HOLIDAYS.
15. TYPE III BARRICADES SHALL BE USED AT POINTS OF CLOSURE TO THRU TRAFFIC ONLY AND SHALL NOT EXCEED 8 FEET IN WIDTH EACH FOR A SINGLE APPROACH LANE. ALL BARRICADES AT THESE LOCATIONS SHALL HAVE REFLECTORIZED STRIPING ON THE BACK SIDES OF THE BARRICADES.
16. CONSTRUCTION EQUIPMENT SHALL NOT BE PARKED IMMEDIATELY BEHIND THE TYPE III BARRICADES DURING NON-WORKING HOURS. IN ANY EVENT, ARTICLE 701.11 OF THE STANDARD SPECIFICATIONS SHALL APPLY.
17. DURING NON-WORKING HOURS THE CONTRACTOR SHALL PROVIDE A MEANS TO RESTRAIN THE TYPE III BARRICADES FROM EASY MOVEMENT BY VANDALS. THE CHOSEN METHOD SHALL BE APPROVED BY THE ENGINEER.
18. THE CONTRACTOR SHALL BE RESPONSIBLE FOR MAINTAINING THE VISIBILITY OF ALL DETOUR AND CONSTRUCTION SIGNS, INCLUDING BRUSHING BACK VEGETATION IF DEEMED NECESSARY BY THE ENGINEER. THE COST OF THIS WORK SHALL BE INCLUDED IN "TRAFFIC CONTROL AND PROTECTION, (SPECIAL)".
19. THE ENGINEER SHALL BE NOTIFIED AT LEAST 24 HOURS BEFORE THE ROAD IS TO BE REOPENED TO TRAFFIC. THE CONTRACTOR WILL CONTACT THE APPROPRIATE LOCAL AGENCIES AND INTERESTED PARTIES.
20. THE COST OF THE DETOUR SHALL BE INCLUDED IN THE UNIT PRICE FOR "TRAFFIC CONTROL AND PROTECTION, (SPECIAL)".
21. FOR TYPE III BARRICADE DETAILS, SEE TC-21 (DETOUR SIGNING FOR CLOSING STATE HIGHWAYS).

*IF A TYPE III BARRICADE WITH AN ATTACHED SIGN PANEL WHICH MEETS NCHRP 350 REQUIREMENTS IS NOT AVAILABLE, THE SIGNS SHALL BE MOUNTED, ABOVE THE BARRICADES, ON SEPARATE SIGN SUPPORTS THAT MEET NCHRP 350 REQUIREMENTS.

CONSTRUCTION SEQUENCE

PRE-STAGE

- SET UP EROSION AND SEDIMENT CONTROL PLAN.
- SET UP DETOUR PLAN.

STAGE 1

- INSTALL WATER MAIN AND UNDERGROUND ELECTRICAL CONDUIT.
- EXCAVATE FOR COMPENSATORY STORAGE AREA.

STAGE 2

- REMOVE AND REPLACE BRIDGE STRUCTURE.
- INSTALL STORM SEWERS AND DRAINAGE STRUCTURES.
- REMOVE PAVEMENT AND REMOVE HMA SURFACE.
- REMOVE CURB AND GUTTER, SIDEWALK AND DRIVEWAYS.
- INSTALL CURB AND GUTTER, SIDEWALK AND DRIVEWAYS.
- INSTALL PAVEMENT (IN RECONSTRUCTION AREAS) TO HMA BINDER.

STAGE 3

- LANDSCAPE.
- INSTALL HMA SURFACE.
- REMOVE DETOUR PLAN.

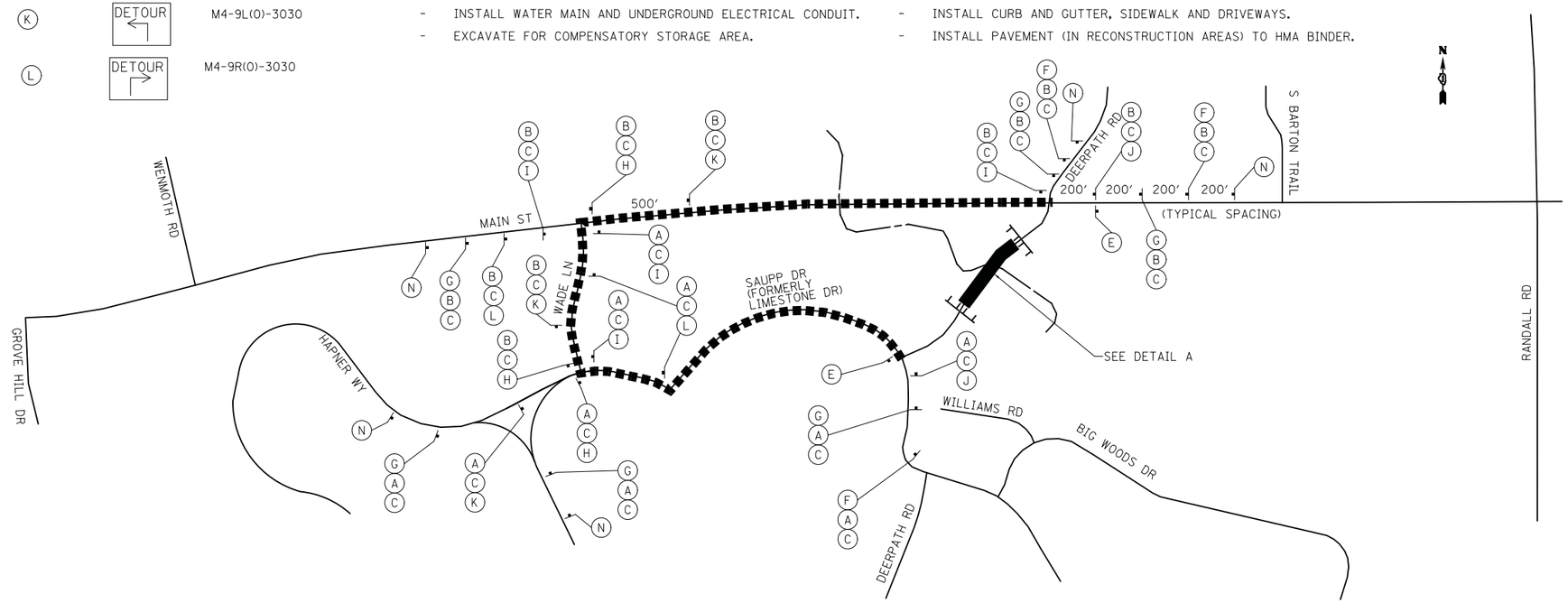

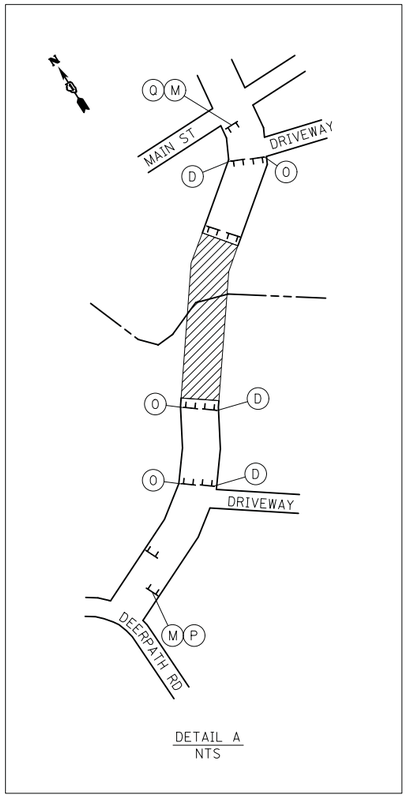

DETAIL A
NTS

PLOT DRIVER = ...\mjp\dms00314\cei_pdf.plt
PEN TABLE = ...\pentbl\cei_idot_general.tbl
FILE NAME = ...\2637-sht-staging01.dgn

CIVILTECH	USER NAME = mjp	DESIGNED - EAD	REVISED -
		DRAWN - EAD	REVISED -
	PLOT SCALE = 100.0000 ' / in.	CHECKED - DNM	REVISED -
	PLOT DATE = 10/10/2015	DATE - 10/12/15	REVISED -

STATE OF ILLINOIS
DEPARTMENT OF TRANSPORTATION

DEERPATH ROAD OVER MILL CREEK
MAINTENANCE OF TRAFFIC - DETOUR PLAN

SCALE: N.T.S. | SHEET OF SHEETS | STA. TO STA.

F.A.U. RTE.	SECTION	COUNTY	TOTAL SHEETS	SHEET NO.
2327	07-00068-00-BR	KANE	78	16

CONTRACT NO. 61A88

ILLINOIS FED. AID PROJECT

GENERAL SOIL EROSION AND SEDIMENT CONTROL NOTES

1. ALL VEGETATIVE AND STRUCTURAL EROSION CONTROL PRACTICES SHALL BE CONSTRUCTED AND MAINTAINED IN ACCORDANCE WITH THE MINIMUM STANDARDS AND SPECIFICATIONS OF THE "ILLINOIS URBAN MANUAL (JUNE, 2013 EDITION)".

2. SOIL DISTURBANCE SHALL BE CONDUCTED IN SUCH A MANNER AS TO MINIMIZE EROSION. SOIL STABILIZATION MEASURES SHALL CONSIDER THE TIME OF YEAR, SITE CONDITIONS AND THE USE OF TEMPORARY OR PERMANENT MEASURES.

3. ALL EROSION CONTROL MEASURES SHALL BE IN PLACE BEFORE ANY WORK BEGINS.

4. THE CONTRACTOR SHALL INSPECT ALL EROSION CONTROL MEASURES WEEKLY AND AFTER EACH ½" RUNOFF-PRODUCING RAINFALL EVENT. ANY NECESSARY REPAIRS OR CLEANUP TO MAINTAIN THE EFFECTIVENESS OF SAID MEASURES SHALL BE MADE IMMEDIATELY. ALL MAINTENANCE OF EROSION CONTROL ITEMS IS INCLUDED IN THE COST OF THE ITEM AND NO ADDITIONAL COMPENSATION SHALL BE GIVEN TO THE CONTRACTOR.

5. ALL STORM SEWER FACITILTIES THAT ARE OR WILL BE FUNCTIONING DURING CONSTRUCTION SHALL BE PROTECTED, FILTERED OR OTHERWISE TREATED TO REMOVE SEDIMENT. MUD AND SEDIMENT DEPOSITS SHALL BE REMOVED FROM THE ROADWAY AT THE END OF EACH WORK DAY BY SHOVELING AND/OR SWEEPING.

6. INLET FILTERS SHALL BE PLACED ON ALL CATCH BASINS, INLETS, AND MANHOLES WITH OPEN GRATES IN THE CURB AND GUTTER.

7. ALL SLOPES SHALL BE COVERED WITH SOD OR SEED & EROSION CONTROL BLANKET AS SOON AS GRADING AND PLACEMENT OF TOPSOIL HAS BEEN COMPLETED.

8. THE EROSION CONTROL MEASURES INDICATED ON THE PLANS ARE THE MINIMUM REQUIREMENTS. ADDITIONAL MEASURES MAY BE REQUIRED AS DIRECTED BY THE ENGINEER.

PERMIT

1. **THIS PROJECT REQUIRES A US ARMY CORPS OF ENGINEERS (USACE) 404 PERMIT THAT WILL BE SECURED BY THE CITY OF BATAVIA. AS A CONDITION OF THIS PERMIT, THE CONTRACTOR WILL NEED TO SUBMIT AN IN-STREAM WORK PLAN TO THE CITY FOR APPROVAL. GUIDELINES ON ACCEPTABLE IN-STREAM WORK TECHNIQUES CAN BE FOUND ON THE USACE WEBSITE. THE USACE DEFINES AND DETERMINES IN-STREAM WORK. THE COST OF ALL MATERIALS, EQUIPMENT, AND LABOR NECESSARY TO COMPLY WITH THE ABOVE PROVISIONS TO PREPARE AND IMPLEMENT AN IN-STREAM WORK PLAN WILL NOT BE PAID FOR SEPARATELY BUT SHALL BE CONSIDERED AS INCLUDED IN THE UNIT BID PRICES OF THE CONTRACT, AND NO ADDITIONAL COMPENSATION WILL BE ALLOWED.**

DEWATERING

1. IF DEWATERING THE CONSTRUCTION AREA IS NECESSARY, ALL WATERS SHALL BE FILTERED BY USING FILTER BAGS OR AN ALTERNATIVE MEASURE APPROVED BY THE CITY. ALL FILTER BAGS MUST HAVE SECONDARY CONTAINMENT DEVICES AND SHOULD BE PLACED ON LEVEL GROUND. WATER MUST HAVE SEDIMENT REMOVED BEFORE BEING ALLOWED TO RETURN TO THE ORIGINAL LAKE, CREEK AND/OR DITCH. THE DISCHARGE SHALL BE DESIGNED SO THAT RETURNING WATERS DO NOT CAUSE EROSION. THE CONTRACTOR SHALL SUBMIT A DEWATERING PLAN TO THE CITY THAT INCLUDES THE METHOD, DESIGN, LOCATION, AND MAINTENANCE OF DEWATERING AS PART OF THE IN-STREAM WORK PLAN.

WORKING IN AND NEAR FLOWING WATER

1. NO WORK SHALL BE PERFORMED IN FLOWING WATER. WORK IN AND NEAR THE CRITICAL AREAS SHALL BE ISOLATED FROM CONCENTRATED FLOWS OR STREAM FLOW. ONCE WORK IN THIS AREA BEGINS, PRIORITY SHALL BE GIVEN TO THE COMPLETION OF THE WORK AND FINAL STABILIZATION OF ALL DISTURBED AREAS. THE CONTRACTOR SHALL BE RESPONSIBLE FOR DIVERTING OR BYPASSING FLOWS AWAY FROM CONSTRUCTION AREAS. THE METHOD OF DEWATERING OR BYPASS SHALL BE SUBMITTED BY THE CONTRACTOR TO THE CITY AS PART OF THE IN-STREAM WORK PLAN.

2. THE DEWATERING OR BYPASS SYSTEM SHALL BE DESIGNED TO CONVEY THE ANTICIPATED BASE FLOW OF THE CHANNEL DURING CONSTRUCTION. THE SYSTEM SHALL ALSO BE DESIGNED SO THAT DISCHARGES FROM LARGER STORM EVENTS CAN PASS DOWNSTREAM WITHOUT CREATING SOIL EROSION AND WATER QUALITY ISSUES.

3. ALL SYSTEMS TO DIVERT WATER AWAY FROM WORK AREAS SHALL BE INSTALLED PRIOR TO THE START OF WORK. WATER SHALL BE DIVERTED OR BYPASS PUMPED SO THAT FLOWING WATER IS NOT WITHIN EXCAVATION AREAS.

4. WORK IN THE WATERWAY SHALL BE TIMED TO TAKE PLACE DURING LOW OR NO-FLOW CONDITIONS.

5. THE DIVERSION/ISOLATION OF THE CREEK FLOWS MUST BE CONSTRUCTED FROM NON-ERODIBLE MATERIALS.

6. THE WORK SHALL BE PERFORMED IN A MANNER THAT SHALL NOT ALLOW A VIOLATION OF FEDERAL, STATE, OR LOCAL WATER QUALITY STANDARDS.

7. EXCAVATED AREAS SHALL BE STABILIZED AS SOON AS THE WORK HAS BEEN COMPLETED.

KANE-DUPAGE SOIL & WATER CONSERVATION DISTRICT NOTES

1. THE KANE-DUPAGE SOIL AND WATER CONSERVATION DISTRICT (KDSWCD) MUST BE NOTIFIED ONE WEEK PRIOR TO THE PRE-CONSTRUCTION CONFERENCE, ONE WEEK PRIOR TO THE COMMENCEMENT OF LAND DISTURBING ACTIVITES, AND ONE WEEK PRIOR TO THE FINAL INSPECTION.

2. A COPY OF THE APPROVED EROSION & SEDIMENT CONTROL PLANS AND IN-STREAM WORK PLAN SHALL BE MAINTAINED ON THE SITE AT ALL TIMES.

3. KDSWCD MUST BE NOTIFIED AT LEAST 24 HOURS PRIOR TO START OF THE IN-STREAM WORK.

4. KDSWCD MUST BE IN AGREEMENT WITH THE OVERALL METHOD OF CREEK DIVERSION/ISOLATION PRIOR TO THE COMMENCEMENT OF CONSTRUCTION.

5. PRIOR TO COMMENCING LAND DISTURBING ACTIVITIES IN AREAS OTHER THAN INDICATED ON THESE PLANS (INCLUDING BUT NOT LIMITED TO ADDITIONAL PHASES OF DEVELOPMENT AND OFF-SITE BORROW OR WASTE AREAS), A SUPPLEMENTARY EROSION CONTROL PLAN SHALL BE SUBMITTED TO THE OWNER FOR REVIEW BY THE KDSWCD.

6. THE CONTRACTOR IS RESPONSIBLE FOR INSTALLATION OF ANY ADDITIONAL EROSION CONTROL MEASURES NECESSARY TO PREVENT EROSION AND SEDIMENTATION AS DETERMINED BY THE KDSWCD.

7. IT IS THE RESPONSIBILITY OF THE GENERAL CONTRACTOR TO INFORM ANY SUB-CONTRACTOR(S) WHO MAY PERFORM WORK ON THIS PROJECT OF THE REQUIREMENTS IN IMPLEMENTING AND MAINTAINING THESE EROSION CONTROL PLANS AND THE NATIONAL POLLUTION DISCHARGE ELIMINATION SYSTEM (NPDES) PERMIT REQUIREMENTS SET FORTH BY THE ILLINOIS ENVIRONMENTAL PROTECTION AGENCY (IEPA).

WINTER SHUTDOWN

1. A WINTER SHUTDOWN IS NOT ANTICIPATED FOR THIS PROJECT, BUT IF ONE IS NEEDED, THEN THE CONDITION OF THE CONSTRUCTION SITE FOR WINTER SHUTDOWN SHALL BE ADDRESSED EARLY IN THE FALL GROWING SEASON SO THAT SLOPES AND OTHER BARE EARTH AREAS MAY BE STABILIZED WITH TEMPORARY AND/OR PERMANENT VEGETATIVE COVER FOR PROPER EROSION AND SEDIMENT CONTROL. ALL OPEN AREAS THAT ARE TO REMAIN IDLE THROUGHOUT THE WINTER SHALL RECEIVE TEMPORARY EROSION CONTROL MEASURES INCLUDING TEMPORARY SEEDING, MULCHING AND/OR EROSION CONTROL BLANKET PRIOR TO THE END OF FALL GROWING SEASON. THE AREAS TO BE WORKED BEYOND THE END OF THE GROWING SEASON MUST INCORPORATE SOIL STABILIZATION MEASURES THAT DO NOT RELY ON VEGETATIVE COVER SUCH AS EROSION CONTROL BLANKET AND HEAVY MULCHING. THE TEMPORARY AND PERMANENT SOIL STABILIZATION MEASURES NEEDED FOR WINTER SHUTDOWN WILL BE PAID FOR BY USING THE EROSION CONTROL ITEMS PROVIDED IN THE CONTRACT. ANY ADDITIONAL WORK NOT COVERED IN THE CONTRACT WILL BE PAID FOR ACCORDING TO ARTICLE 109.04 OF THE STANDARD SPECIFICATIONS.

STABILIZING CONSTRUCTION AREAS

1. TEMPORARY STABILIZATION OF THE CONSTRUCTION AREA SHALL TAKE PLACE AT THE END OF EACH WORK DAY. THIS SHALL INCLUDE REMOVAL OF ALL EQUIPMENT AND HAZARDOUS MATERIAL WITHIN THE CHANNEL.

2. PERMANENT STABILIZATION OF THE CONSTRUCTION AREA SHALL BE COMPLETED AT THE END OF EACH MAJOR STAGE OF WORK.

3. ALL DISTURBED AREAS SHALL BE STABILIZED WITHIN 14 DAYS OF FINAL GRADING OR WHEN LEFT IDLE FOR MORE THAN 14 DAYS.

4. THE COMPLETED SLOPES SHALL BE PERMANENTLY SEEDED WHERE PRACTICAL AS THE EXCAVATION PROCEEDS TO ANOTHER STAGE OF CONSTRUCTION. UNDER NO CIRCUMSTANCES SHALL THE CONTRACTOR PROLONG FINAL GRADING AND SHAPING SO THAT THE ENTIRE PROJECT CAN BE PERMANENTLY LANDSCAPED AT ONE TIME.

IN-STREAM CONSTRUCTION SEQUENCE

1. INSTALL SOIL EROSION AND SEDIMENT CONTROL MEASURES, AND IMPLEMENT APPROVED IN-STREAM WORK PLAN.

2. INSTALL PROPOSED WATERMAIN AND UNDERGROUND ELECTRICAL CONDUIT.

3. REMOVE EXISTING WATERMAIN AND UNDERGROUND ELECTRICAL CONDUIT.

4. REMOVE BRIDGE DECK AS SHOWN IN THE STRUCTURE PLANS.

5. INSTALL COFFERDAMS TO CONSTRUCT ABUTMENT AND PIER EXTENSIONS AS SHOWN IN THE STRUCTURE PLANS.

6. STABILIZE THE AREA AROUND ABUTMENTS AND PIER WITH RIPRAP AND REMOVE COFFERDAMS.

7. POUR THE BRIDGE DECK AND CONSTRUCT REMAINING BRIDGE ITEMS.

8. RESTORE AND STABILIZE THE REMAINING IN-STREAM WORK AREA.

9. REMOVE IN-STREAM WORK PLAN ITEMS.

NOTE: THE IN-STREAM CONSTRUCTION SEQUENCE ABOVE IS A SUGGESTED SEQUENCE. DEPENDING ON HOW THE CONTRACTOR DEVELOPS AND IMPLEMENTS THE IN-STREAM WORK PLAN, THE CONSTRUCTION SEQUENCE MAY VARY. REGARDLESS, THE IN-STREAM WORK PLAN MUST BE APPROVED BY THE CITY AND KDSWCD, AND THE REPLACEMENT OF THE WATERMAIN AND UNDERGROUND ELECTRICAL CONDUIT MUST BE DONE AT THE BEGINNING.

LEGEND

- EROSION CONTROL BLANKET
  TEMPORARY EROSION CONTROL SEEDING
- HEAVY DUTY EROSION CONTROL BLANKET
  TEMPORARY EROSION CONTROL SEEDING
- MULCH, METHOD 2
  TEMPORARY EROSION CONTROL SEEDING
- STONE RIPRAP (CLASS AS NOTED)
- PERIMETER EROSION BARRIER (USE SILT FENCE)
- INLET FILTERS
- TEMPORARY DITCH CHECKS

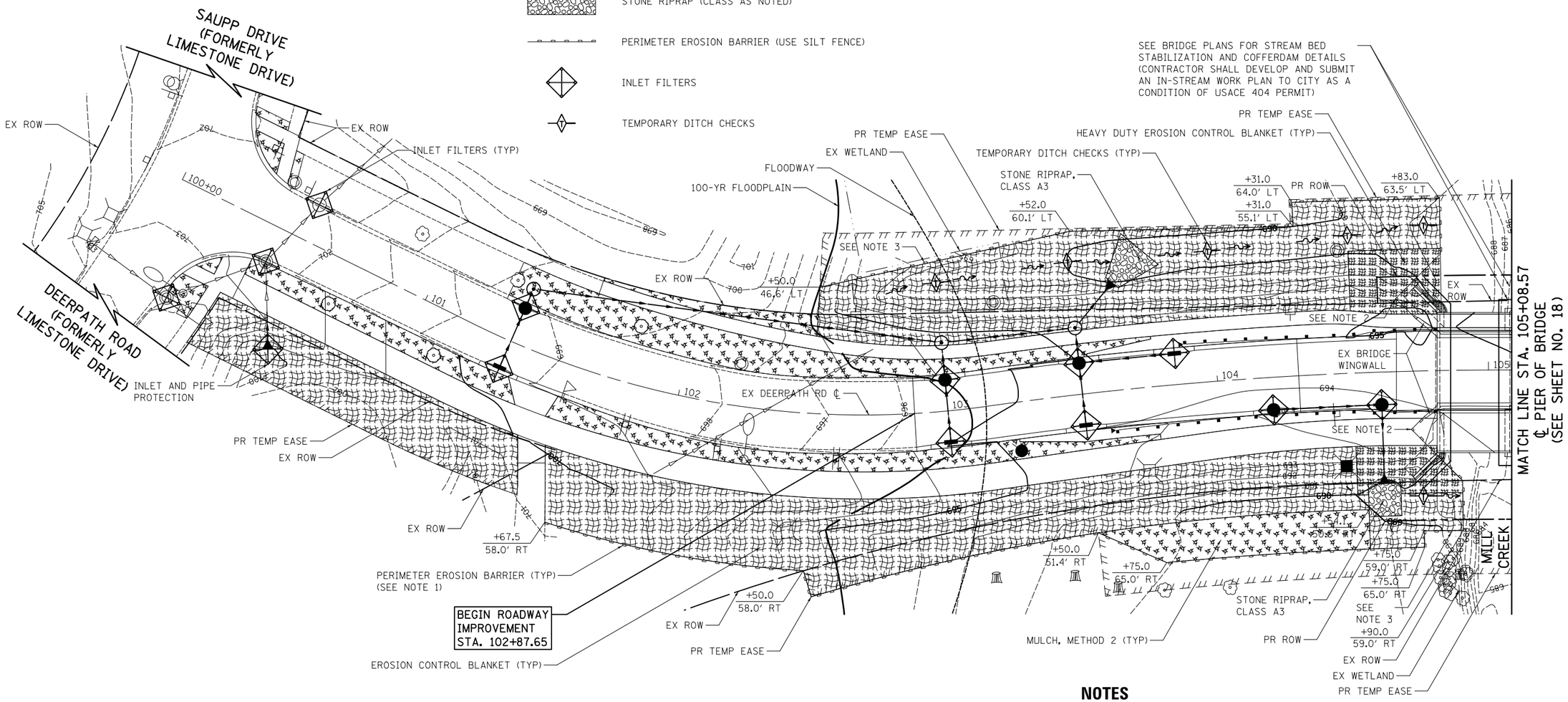

NOTES

1. THE PERIMETER EROSION BARRIER (USE SILT FENCE) SERVES BOTH AS AN EROSION CONTROL MEASURE AND LIMITS OF CONSTRUCTION BARRIER.

2. PRIOR TO BEGINNING OF ANY CONSTRUCTION ACTIVITES, SILT FENCE MAY BE REQUIRED TO PREVENT UNCONTROLLED SHEET FLOW FROM DIRECTLY DISCHARGING INTO MILL CREEK. AS CONSTRUCTION ACTIVITIES COMMENCE, THE SILT FENCE MAY REQUIRE MODIFICATION, PARTIAL REMOVAL, OR COMPLETE REMOVAL. SILT FENCE SHALL BE PAID FOR AS "PERIMETER EROSION BARRIER" WHICH SHALL INCLUDE ALL MAINTENANCE, MODIFICATIONS, PARTIAL REMOVAL, AND COMPLETE REMOVAL AS STATED IN SECTION 280 OF THE STANDARD SPECIFICATIONS AND IN THE PLANS.

3. TO LIMIT WETLAND IMPACTS, THE CONTRACTOR SHALL NOT GO BEYOND THE SILT FENCE LIMITS OR BEYOND THE OFFSET LIMITS OF 43.0' LT AND 55.0' RT (IN BRIDGE AREA) WITHOUT PRIOR APPROVAL FROM THE ENGINEER.

PLOT DRIVER = ...\mjp\dms00314\ceu_pdf.plt
PEN TABLE = ...\pentbl\ceu_idot_general.tbl
FILE NAME = ...\V2637-sht-eros02.dgn

CIVILTECH	USER NAME = mjp	DESIGNED - MJP	REVISED -
		DRAWN - MJP	REVISED -
	PLOT SCALE = 20.0000 ' / in.	CHECKED - DNM	REVISED -
	PLOT DATE = 10/10/2015	DATE - 10/12/15	REVISED -

STATE OF ILLINOIS
DEPARTMENT OF TRANSPORTATION

DEERPATH ROAD OVER MILL CREEK
EROSION AND SEDIMENT CONTROL PLAN

SCALE: 1" = 20' | SHEET OF SHEETS | STA. 102+87.65 TO STA.105+08.57

F.A.U. RTE.	SECTION	COUNTY	TOTAL SHEETS	SHEET NO.
2327	07-00068-00-BR	KANE	78	18

CONTRACT NO. 61A88

ILLINOIS FED. AID PROJECT

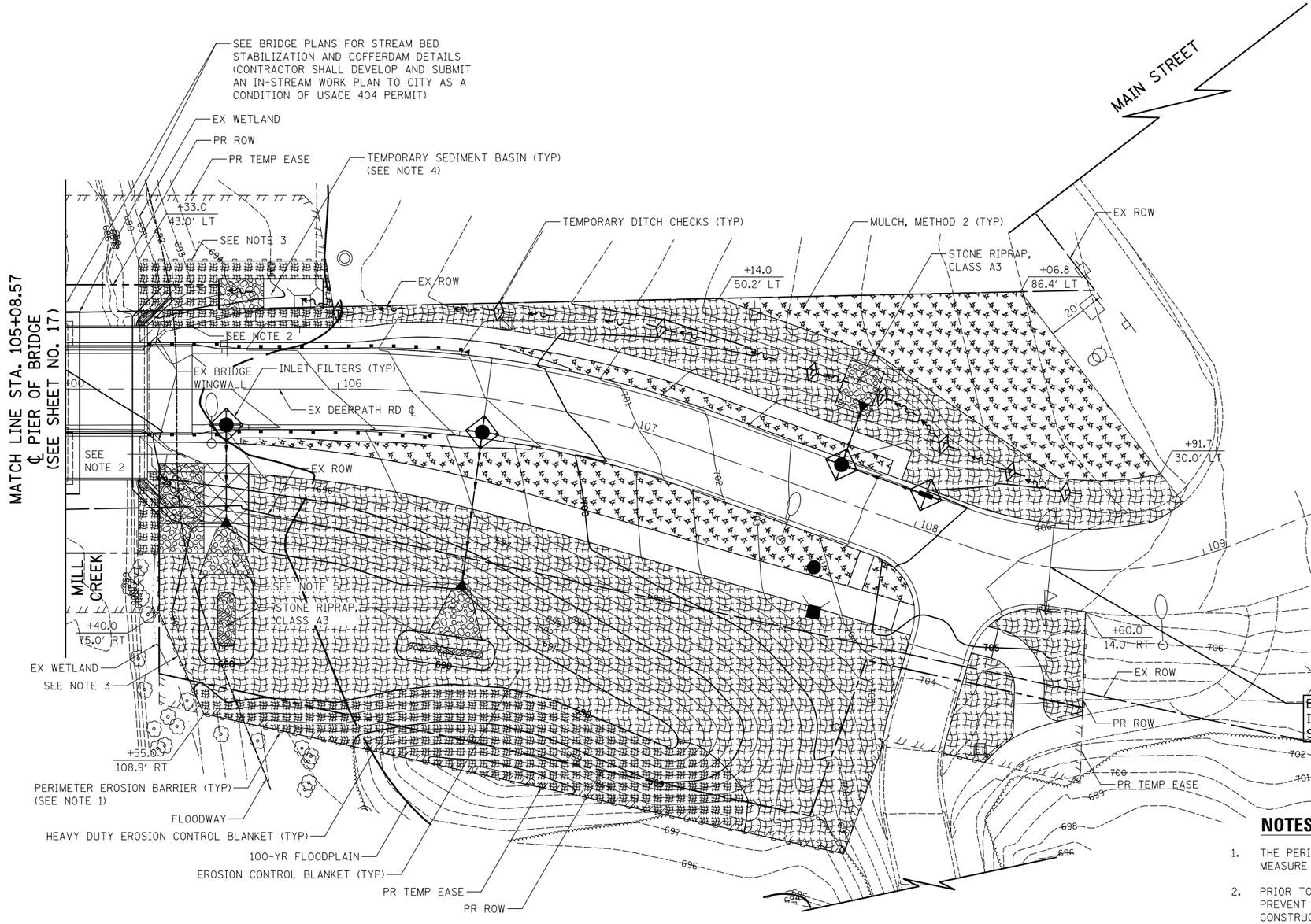

LEGEND

- EROSION CONTROL BLANKET
  TEMPORARY EROSION CONTROL SEEDING
- HEAVY DUTY EROSION CONTROL BLANKET
  TEMPORARY EROSION CONTROL SEEDING
- MULCH, METHOD 2
  TEMPORARY EROSION CONTROL SEEDING
- TEMPORARY SEDIMENT BASIN (SEE NOTE 4)
- TEMPORARY SEDIMENT BASIN REMOVAL (SEE NOTE 4)
- STONE RIPRAP (CLASS AS NOTED)
- PERIMETER EROSION BARRIER (USE SILT FENCE)
- INLET FILTERS
- TEMPORARY DITCH CHECKS

NOTES

1. THE PERIMETER EROSION BARRIER (USE SILT FENCE) SERVES BOTH AS AN EROSION CONTROL MEASURE AND LIMITS OF CONSTRUCTION BARRIER.

2. PRIOR TO BEGINNING OF ANY CONSTRUCTION ACTIVITES, SILT FENCE MAY BE REQUIRED TO PREVENT UNCONTROLLED SHEET FLOW FROM DIRECTLY DISCHARGING INTO MILL CREEK. AS CONSTRUCTION ACTIVITIES COMMENCE, THE SILT FENCE MAY REQUIRE MODIFICATION, PARTIAL REMOVAL, OR COMPLETE REMOVAL. SILT FENCE SHALL BE PAID FOR AS "PERIMETER EROSION BARRIER" WHICH SHALL INCLUDE ALL MAINTENANCE, MODIFICATIONS, PARTIAL REMOVAL, AND COMPLETE REMOVAL AS STATED IN SECTION 280 OF THE STANDARD SPECIFICATIONS AND IN THE PLANS.

3. TO LIMIT WETLAND IMPACTS, THE CONTRACTOR SHALL NOT GO BEYOND THE SILT FENCE LIMITS OR BEYOND THE OFFSET LIMITS OF 43.0' LT AND 55.0' RT (IN BRIDGE AREA) WITHOUT PRIOR APPROVAL FROM THE ENGINEER.

4. THE TEMPORARY SEDIMENT BASIN WILL BE CONSRUCTED PRIOR TO BEGINNING OF ANY CONSTRUCTION ACTIVITES. THE BASIN WILL INTERCEPT EXISTING DITCH FLOW AND PROPOSED DITCH FLOW THROUGHOUT ALL THE STAGES OF CONSTRUCTION. ALL DITCH RUNOFF MUST PASS THROUGH THE BASIN PRIOR TO DISCHARGING INTO MILL CREKK. THE INSTALLATION, MAINTENANCE, MODIFICATION, AND REMOVAL OF TEMPORARY SEDIMENT BASIN WILL BE PAID FOR ONLY ONCE AS "TEMPORARY SEDIMENT BASIN", AS SPECIFIED IN THE SPECIAL PROVISIONS.

5. THE STONE RIPRAP AT THIS LOCATION WILL NOT BE CONSTRUCTED UNTIL THE TEMPORARY SEDIMENT BASIN IS COMPLETELY REMOVED.

PLOT DRIVER = ...\mjp\dms00314\cei.pdf.plt
PEN TABLE = ...\pentbl\cei_idot_general.tbl
FILE NAME = ...\2637-sht-eros03.dgn

CIVILTECH

USER NAME = mjp	DESIGNED - MJP	REVISED -	
	DRAWN - MJP	REVISED -	
PLOT SCALE = 20.0000 ' / in.	CHECKED - DNM	REVISED -	
PLOT DATE = 10/10/2015	DATE - 10/12/15	REVISED -	

STATE OF ILLINOIS
DEPARTMENT OF TRANSPORTATION

DEERPATH ROAD OVER MILL CREEK
EROSION AND SEDIMENT CONTROL PLAN

SCALE: 1" = 20' | SHEET OF SHEETS | STA. 105+08.57 TO STA.108+47.69

F.A.U. RTE.	SECTION	COUNTY	TOTAL SHEETS	SHEET NO.
2327	07-00068-00-BR	KANE	78	19

CONTRACT NO. 61A88

ILLINOIS FED. AID PROJECT

CULVERT INLET PROTECTION - SILT FENCE

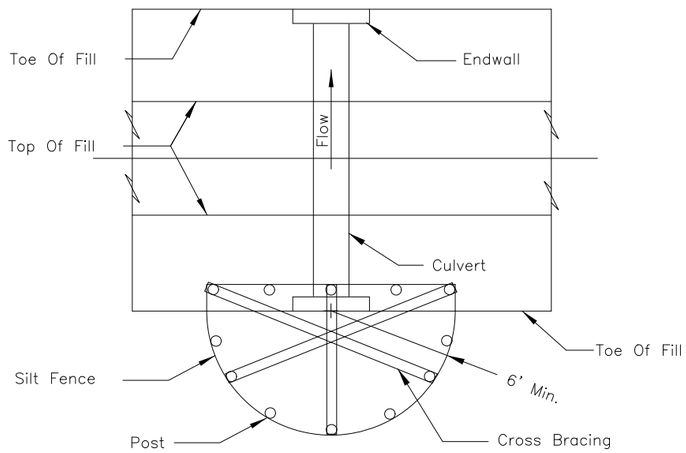

PLAN VIEW

NOTES:
1. The silt fence shall meet the requirements as shown on standard drawing IL-620 SILT FENCE except the maximum post spacing shall be 3 feet and the tops of posts shall be cross braced.
2. Sediment shall be removed when the sediment has accumulated to one-half the height of the silt fence.
3. The maximum drainage area to the culvert being protected is 1 acre.

EROSION CONTROL BLANKET INSTALLATION DETAILS

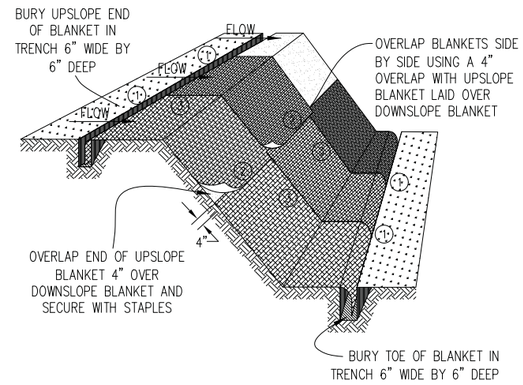

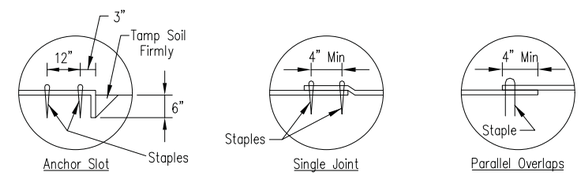

DETAIL 1 DETAIL 2 DETAIL 3

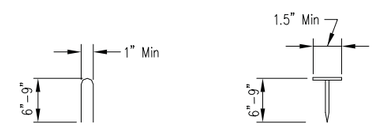

STAPLE DETAIL PUSH PIN DETAIL

NOTES:
1. Staples shall be placed in a diamond pattern at 2 per s.y. for stiched blankets. Non-stiched shall use 4 staples per s.y. of material. This equates to 200 staples with stiched blanket and 400 stapels with non-stiched blanket per 100 s.y. of material.
2. Staple or push pin lengths shall be selected based on soil type and conditions (minimum staple length is 6").
3. Erosion control material shall be placed in contact with the soil over a prepared seedbed.
4. All anchor slots shall be stapled at approximately 12" intervals.

TEMPORARY DITCH CHECK

NOTES:
1. OVERLAP MINIMUM IS THE DIAMETER OF THE FILTER SOCK.
2. 2' SPACING FOR METAL STAKES OR SPACE ACCORDING TO MANUFACTURER'S SPECIFICATIONS.

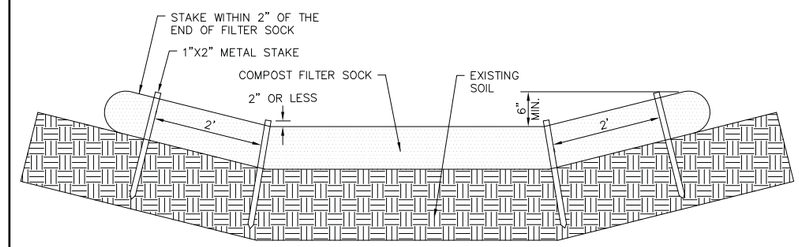

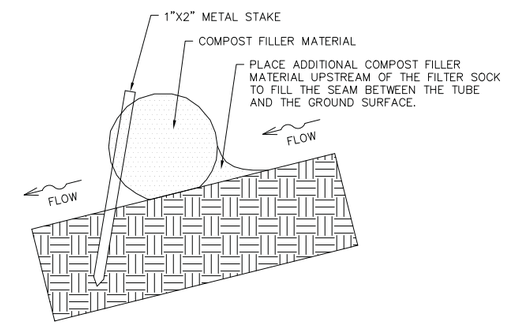

NOTES:
1. END OF FILTER SOCK SHALL BE TURNED AT LEAST 6" UPSLOPE.
2. RECOMMENDED STAKES ARE 1-1/8" WIDE X 1-1/8" THICK X 30" LONG.
3. STAKES SHALL NOT EXTEND ABOVE THE FILTER SOCK MORE THAN 2".
4. SPACING: THE TOE OF THE UPSTREAM DITCH FILTER SHALL CREATE A HORIZONTAL LINE WITH THE TOP OF THE DOWNSTREAM DITCH FILTER.
5. PLACE A COMPOST BERM UPSTREAM OF THE FILTER SOCK, A 3" DEEP TRENCH IS REQUIRED. THE COMPOST FILTER SOCK SHALL BE IN FIRM CONTACT WITH THE SOIL.
6. UNDER NO CIRCUMSTANCES SHALL THE COMPOST FILTER SOCK BE ALLOWED TO BRIDGE OVER SURFACE IRREGULARITIES. REMOVE OR REGRADE THE GROUND SURFACE IN THE VICINITY OF THE FILTER SOCK PLACEMENT TO PRECLUDE ANY FLOW UNDER THE DEVICE.
7. DOWNSTREAM DITCH FILTER SHALL BE IN PLACE BEFORE THE UPSTREAM DITCH FILTER IS REMOVED OR RESET.

REFERENCE	NRCS Natural Resources Conservation Service	STANDARD DWG. NO.	REFERENCE		STANDARD DWG. NO.	REFERENCE		IUM-514
Project		IL-508SF	Project	ILLINOIS URBAN MANUAL	IUM-530	Project		
Designed ____ Date ____		SHEET 1 OF 1	Designed ____ Date ____		SHEET 1 OF 1	Designed ____ Date ____		SHEET 1 OF 1
Checked ____ Date ____		DATE 1-29-99	Checked ____ Date ____		DATE 11-01-2008	Checked ____ Date ____		
Approved ____ Date ____			Approved ____ Date ____			Approved ____ Date ____		

PLOT DRIVER = ...\mjp\dms00314\ce1.pdf.plt
PEN TABLE = ...\pentbl\ce1.idot.general.tbl
FILE NAME = ...\2637-sht-ero84.dgn

CIVILTECH	USER NAME = mjp	DESIGNED - MJP	REVISED -	STATE OF ILLINOIS DEPARTMENT OF TRANSPORTATION	DEERPATH ROAD OVER MILL CREEK EROSION AND SEDIMENT CONTROL DETAILS	F.A.U. RTE.	SECTION	COUNTY	TOTAL SHEETS	SHEET NO.
		DRAWN - MJP	REVISED -			2327	07-00068-00-BR	KANE	78	20
	PLOT SCALE = 1.0000 ' / in.	CHECKED - DNM	REVISED -					CONTRACT NO. 61A88		
	PLOT DATE = 10/10/2015	DATE - 10/12/15	REVISED -		SCALE: N.T.S. SHEET OF SHEETS STA. TO STA.		ILLINOIS FED. AID PROJECT			

INLET PROTECTION - PAVED AREAS
DROP-IN PROTECTION

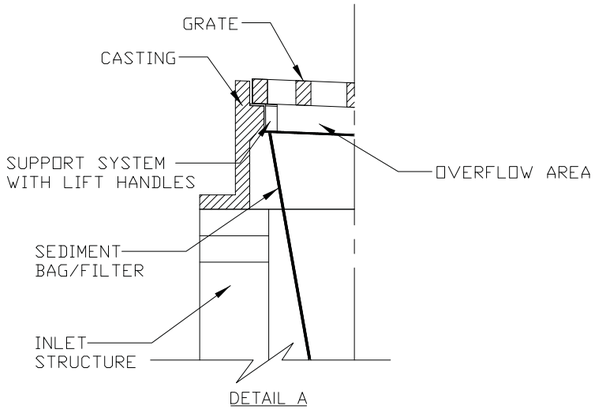

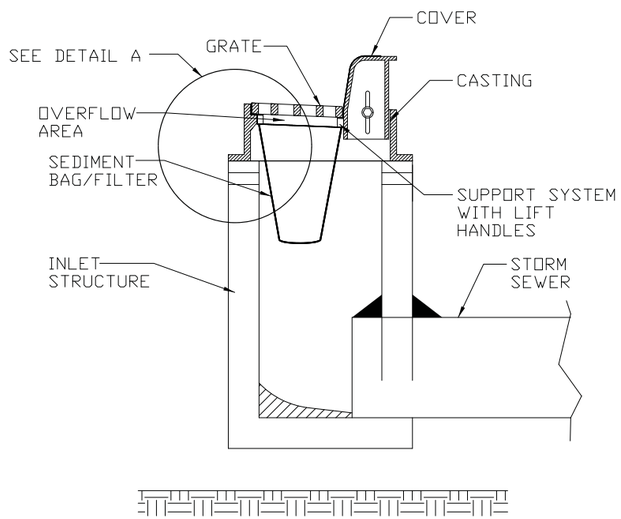

REFERENCE
Project
Designed Date
Checked Date
Approved Date

STANDARD DWG. NO.
IUM-561D
SHEET 1 OF 1
DATE 01-11-11

PIPE OUTLET TO FLAT AREA

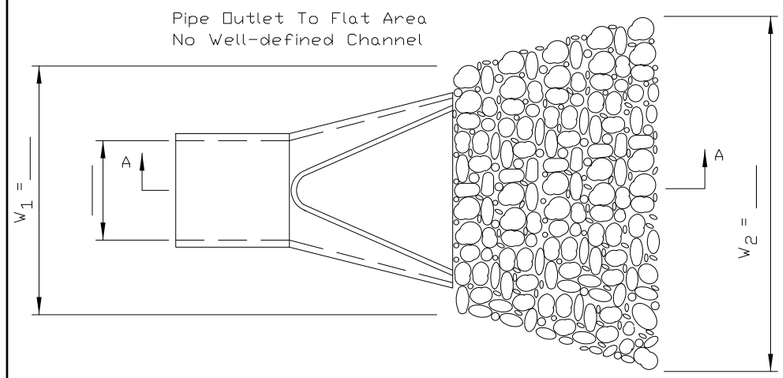

PLAN

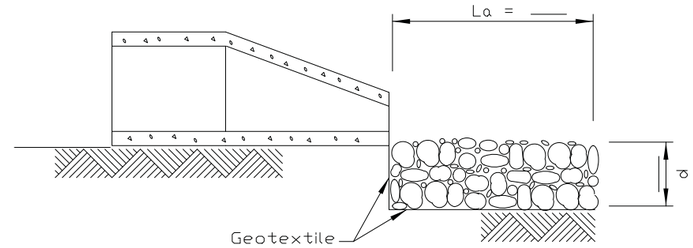

SECTION A-A

NOTES:
1. The filter fabric shall meet the requirements in material specifications 592 GEOTEXTILE Table 1 or 2, class I, II or III.
2. The rock riprap shall shall meet the IDOT requirements for the following gradation: RR _____, Quality _____.
3. The riprap shall be placed according to construction specification 61 LOOSE ROCK RIPRAP. The rock may be equipment placed.

REFERENCE
Project
Designed Date
Checked Date
Approved Date

NRCS
Natural Resources Conservation Service

STANDARD DWG. NO.
IL-610
SHEET 1 OF 1
DATE 9-15-93

PIPE OUTLET TO CHANNEL

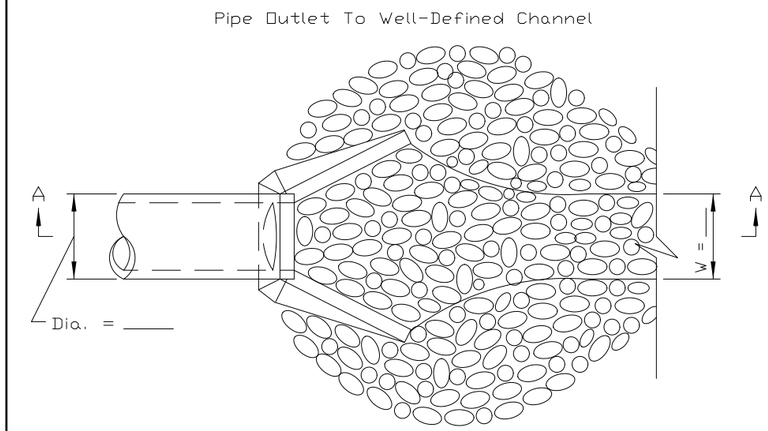

PLAN

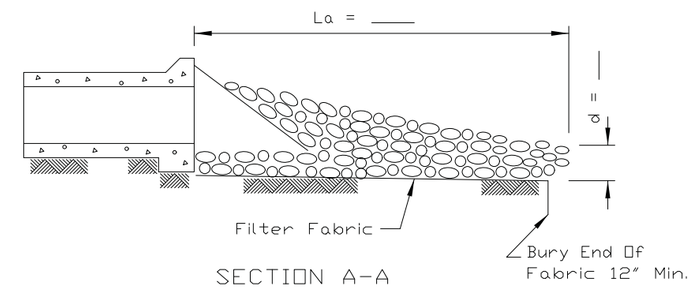

SECTION A-A

NOTES:
1. The filter fabric shall meet the requirements in material specification 592 GEOTEXTILE Table 1 or 2, Class I, II or III.
2. The rock riprap shall meet the IDOT requirements for the following gradation _____.
3. The riprap shall be placed according to construction specification 61 LOOSE ROCK RIPRAP. The rock may be equipment placed.

REFERENCE
Project
Designed Date
Checked Date
Approved Date

NRCS
Natural Resources Conservation Service

STANDARD DWG. NO.
IL-611
SHEET 1 OF 1
DATE 8-18-94

RIPRAP SCHEDULE

STRUCTURE NUMBER	LOCATION		PIPE SIZE	CLASS	THICKNESS	APRON LENGTH	UPSTREAM WIDTH	DOWNSTREAM WIDTH	RIPRAP QUANTITY	FILTER FABRIC QUANTITY
	STATION	OFFSET	(IN)		(IN)	(FT)	(FT)	(FT)	(SQ YD)	(SQ YD)
11	103+65.0	44.5 LT	24	A3	15	16	6	18	22	22
14	104+60.3	41.1 RT	24	A3	15	12	12	12	16	16
16	105+62.5	46.2 RT	24	A3	15	16	6	18	22	22
18	106+50.0	64.6 RT	24	A3	15	16	6	18	22	22
21	107+70.0	33.7 LT	12	A3	15	16	12	12	22	22
-	SEE COMP STORAGE PLAN			A3	15	AREA BASED ON CONTOUR AREA			12	12
-	SEE COMP STORAGE PLAN			A3	15	AREA BASED ON CONTOUR AREA			6	6

PLOT DRIVER = ...\mjp\dms@0314\ces_pdf.plt
PEN TABLE = ...\pentbl\ces_idot_general.tbl
FILE NAME = ...\2637-sht-eros05.dgn

CIVILTECH

USER NAME = mjp	DESIGNED - MJP	REVISED -
	DRAWN - MJP	REVISED -
PLOT SCALE = 1.0000 ' / in.	CHECKED - DNM	REVISED -
PLOT DATE = 10/10/2015	DATE - 10/12/15	REVISED -

STATE OF ILLINOIS
DEPARTMENT OF TRANSPORTATION

DEERPATH ROAD OVER MILL CREEK
EROSION AND SEDIMENT CONTROL DETAILS

SCALE: N.T.S. | SHEET OF SHEETS | STA. TO STA.

F.A.U. RTE.	SECTION	COUNTY	TOTAL SHEETS	SHEET NO.
2327	07-00068-00-BR	KANE	78	21

CONTRACT NO. 61A88

ILLINOIS FED. AID PROJECT

SEDIMENT BASIN DEWATERING DEVICE

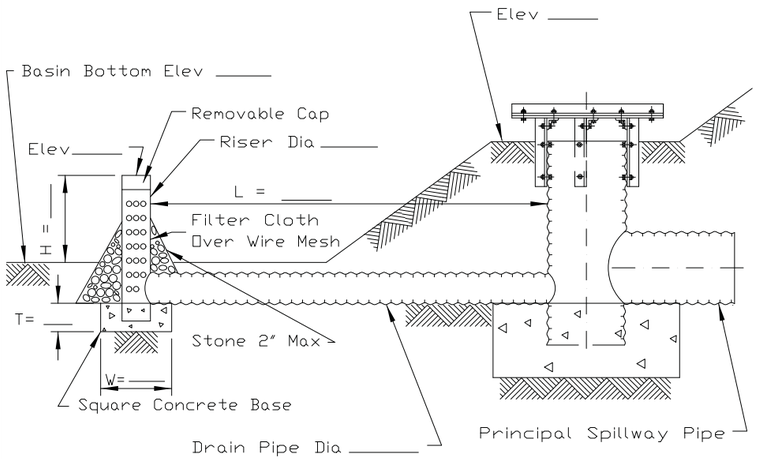

SECTION ON CENTERLINE

NOTES:
1. Slotted inlets shall be fabricated from corrugated metal or smooth steel.
2. Slots shall be cut cleanly and deburred. Ends of slots may be round or square.
3. Gravel filter, if used, shall be pit run sand and gravel with a maximum particle diameter of 2".
4. Fabricated or standard elbow; fabricated or standard tee with the pipe or plug in upstream end; or standard tee with one end embedded in concrete.
5. Thirty 1" diameter holes per foot of riser may be substituted for the 1"x 4" slots for 6" diameter risers.
6. Drain pipe shall be the same material and gauge as the principle spillway pipe.
7. Slot spacing and size shall be as shown on standard drawing IL-580.
8. Coupling bands shall be as shown on standard drawing IL-580.

REFERENCE			STANDARD DWG. NO.
Project			IL-615
Designed	Date	NRCS Natural Resources Conservation Service	SHEET 1 OF 1
Checked	Date		DATE 9-22-93
Approved	Date		

TEMPORARY SEDIMENT TRAP

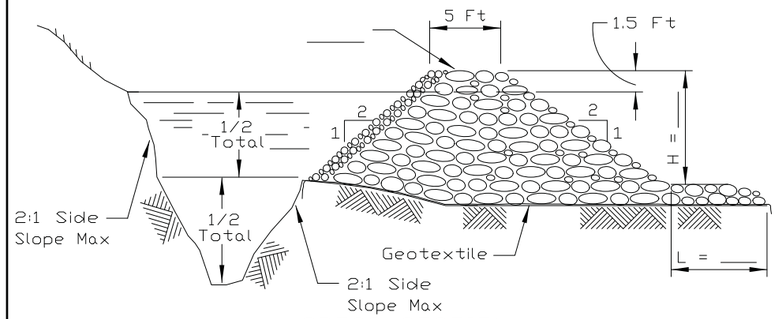

CROSS SECTION

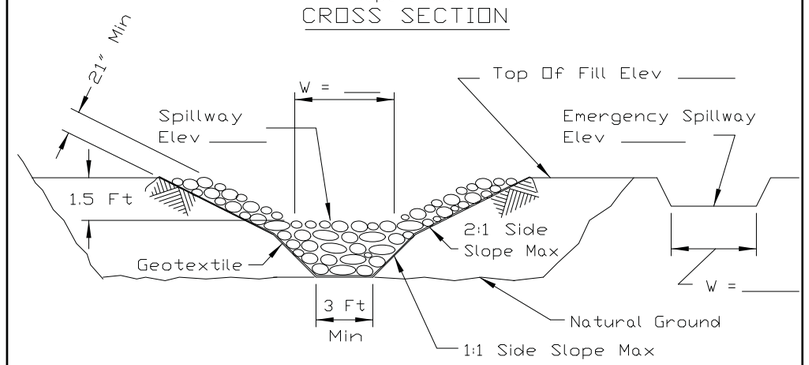

STONE SECTION

NOTES:
1. If the sediment pool is formed or enlarged the side slope will be 2:1 or flatter.
2. The fill shall be constructed using IDOT RR-4 stone size. A 1'layer of IDOT CA-2 should be placed on the inside face to reduce the flow rate.
3. The rock will be placed according to construction specification 25 ROCKFILL. Placement will be by Method 1 and compaction will be class III.
4. The geotextile shall meet the requirements in material specification 592 GEOTEXTILE table 1 or 2, class I, II or IV.

REFERENCE			STANDARD DWG. NO.
Project			IL-660
Designed	Date	NRCS Natural Resources Conservation Service	SHEET 1 OF 1
Checked	Date		DATE 11-20-01
Approved	Date		

SUMP PIT PLAN

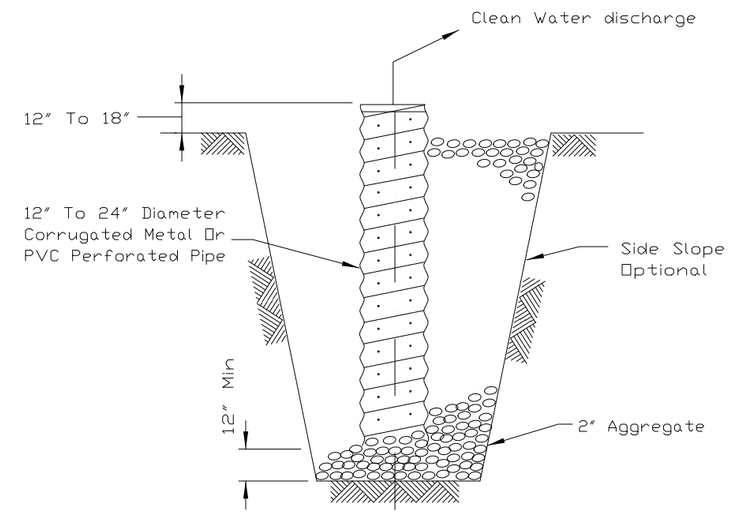

SECTION

NOTES:
1. Pit dimensions are optional.
2. The standpipe will be constructed by perforating a 12"-24" diameter corrugated metal or PVC pipe.
3. A base of 2" aggregate will be placed in the pit to a minimum depth of 12". After installing the standpipe, the pit surrounding the standpipe will then be backfilled with 2" aggregate.
4. The standpipe will extend 12" to 18" above the lip of the pit.
5. If discharge will be pumped directly to a storm drainage system, the standpipe will be wrapped with filter fabric before installation.
6. If desired, 1/4"-1/2" hardware cloth may be placed around the standpipe prior to attaching the filter fabric. This will increase the rate of water seepage into the pipe.

REFERENCE			STANDARD DWG. NO.
Project			IL-650
Designed	Date	NRCS Natural Resources Conservation Service	SHEET 1 OF 1
Checked	Date		DATE 8-11-94
Approved	Date		

PLOT DRIVER = ...\mjp\dms00314\cen.pdf.plt
PEN TABLE = ...\pentbl\cen.idot.general.tbl
FILE NAME = ...\2637-sht-erosd05.dgn

CIVILTECH	USER NAME = mjp	DESIGNED - MJP	REVISED -	STATE OF ILLINOIS DEPARTMENT OF TRANSPORTATION	DEERPATH ROAD OVER MILL CREEK EROSION AND SEDIMENT CONTROL DETAILS	F.A.U. RTE.	SECTION	COUNTY	TOTAL SHEETS	SHEET NO.
		DRAWN - MJP	REVISED -			2327	07-00068-00-BR	KANE	78	22
	PLOT SCALE = 1.0000 ' / in.	CHECKED - DNM	REVISED -					CONTRACT NO. 61A88		
	PLOT DATE = 10/10/2015	DATE - 10/12/15	REVISED -		SCALE: N.T.S. SHEET OF SHEETS STA. TO STA.		ILLINOIS FED. AID PROJECT			

FLOATING SILT CURTAIN - TYPICAL LAYOUT

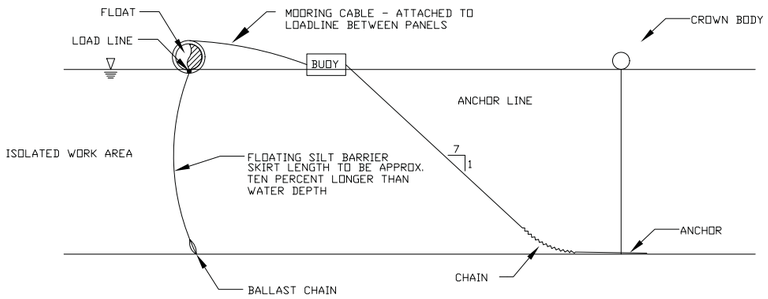

TYPICAL COMPONENTS / ANCHORAGE SYSTEM

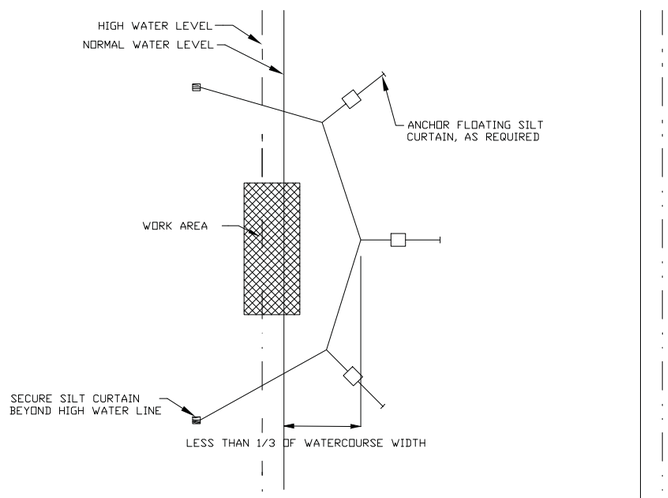

TYPICALPLAN VIEW

Maximum flow for waterbody shall be less than 5fps.

Isolated work area shall not exceed more than 1/3 stream width.

Silt curtain shall be placed parallel to stream flow.

FLOATING SILT CURTAIN - PANEL CONNECTORS

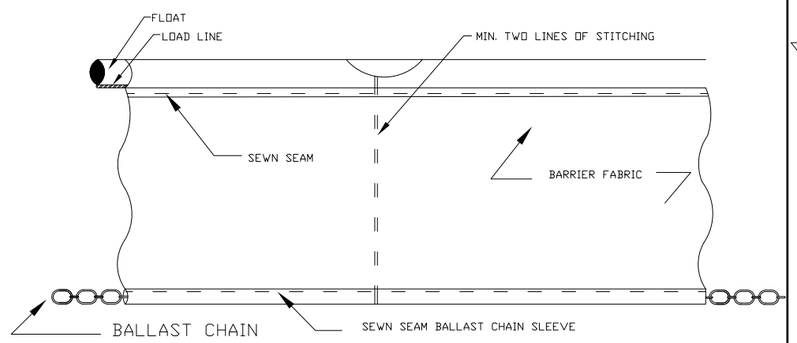

SEWN SEAM

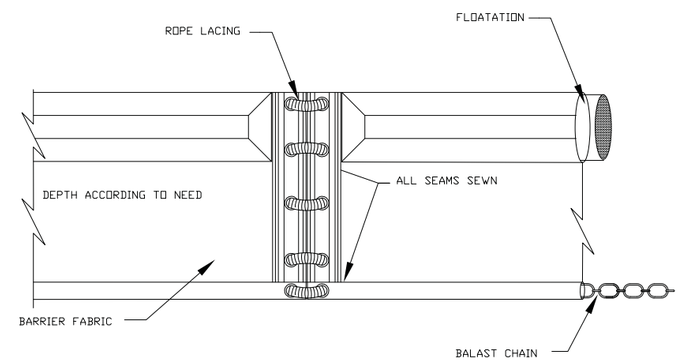

GROMMETED HOLES WITH ROPE LACING

TEMPORARY STREAM CROSSING PLAN

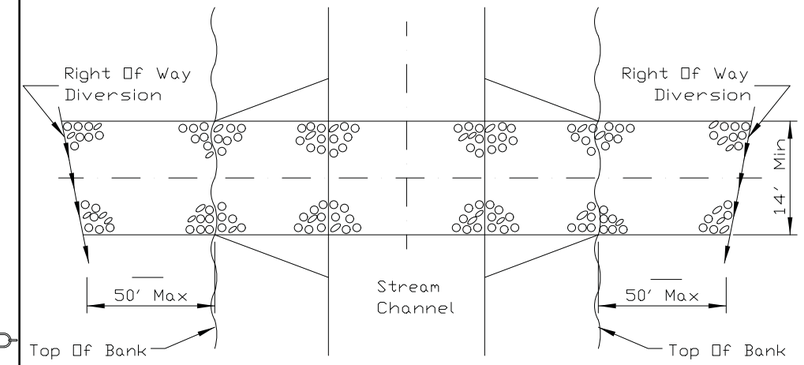

PLAN VIEW

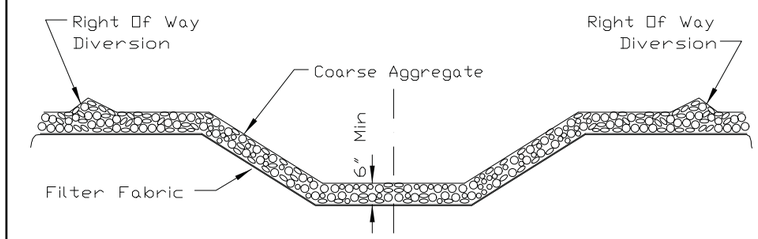

SECTION

NOTES:

1. Filter fabric shall meet the requirements of material specification 592 GEOTEXTILE, Table 1 or 2, Class I, II or IV and shall be placed over the cleared area prior to the placing of rock.
2. Rock or reclaimed concrete shall meet one of the following IDOT coarse aggregate gradation, CA-1, CA-2, CA-3 or CA-4 and be placed according to construction specification 25 ROCKFILL using placement Method I.
3. The stream crossing shall be made as perpendicular to the centerline of the stream as possible.
4. The crossing shall be removed immediately when no longer needed and the stream channel restored to its original cross section.

REFERENCE	STANDARD DWG. NO.	REFERENCE	STANDARD DWG. NO.	REFERENCE	STANDARD DWG. NO.
Project	IUM-617A	Project	IUM-617B	Project	IL-675
Designed Date	SHEET 1 OF 1	Designed Date	SHEET 1 OF 1	Designed Date	SHEET 1 OF 1
Checked Date	DATE 1-06-2012	Checked Date	DATE 1-6-2012	Checked Date	DATE 4-1-94
Approved Date		Approved Date		Approved Date	

NRCS Natural Resources Conservation Service

NOTE: AS STATED ON THE BRIDGE GENERAL PLAN AND ELEVATION SHEET, THE CONTRACTOR WILL NEED TO SUBMIT AN IN-STREAM WORK PLAN TO THE CITY AS A CONDITION OF THE US ARMY CORPS OF ENGINEERS 404 PERMIT. THE EROSION CONTROL DETAILS SHOWN ABOVE SHOULD BE CONSIDERED, BUT NOT LIMITED TO, BY THE CONTRACTOR IN DEVELOPING THE IN-STREAM WORK PLAN. THE IMPLEMENTATION OF EROSION AND SEDIMENT CONTROL MEASURES IN THE IN-STREAM WORK PLAN (DEFINED AS THE BRIDGE AREA BETWEEN STA. 104+83 AND STA. 105+33) WILL NOT BE PAID FOR SEPARATELY BUT SHALL BE INCLUDED IN THE COST OF THE CONTRACT.

PLOT DRIVER = ...\mjp\dms00314\ces.pdf.plt
PEN TABLE = ...\pentbl\ces.idot.general.tbl
FILE NAME = ...\2637-sht-eros07.dgn

CIVILTECH

USER NAME = mjp	DESIGNED - MJP	REVISED -	
	DRAWN - MJP	REVISED -	
PLOT SCALE = 1.0000 ' / in.	CHECKED - DNM	REVISED -	
PLOT DATE = 10/10/2015	DATE - 10/12/15	REVISED -	

STATE OF ILLINOIS
DEPARTMENT OF TRANSPORTATION

DEERPATH ROAD OVER MILL CREEK
EROSION AND SEDIMENT CONTROL DETAILS

SCALE: N.T.S. | SHEET OF SHEETS | STA. TO STA.

F.A.U. RTE.	SECTION	COUNTY	TOTAL SHEETS	SHEET NO.
2327	07-00068-00-BR	KANE	78	23

CONTRACT NO. 61A88

ILLINOIS FED. AID PROJECT

SILT FENCE PLAN

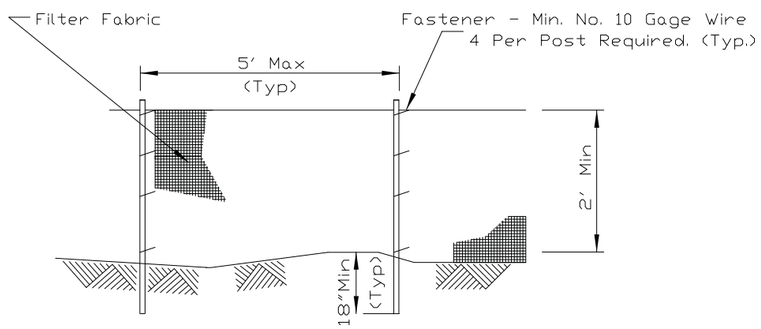

ELEVATION

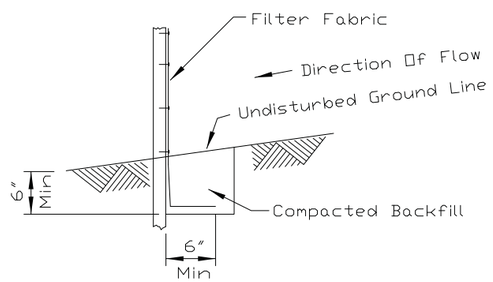

FABRIC ANCHOR DETAIL

NOTES:

1. Temporary sediment fence shall be installed prior to any grading work in the area to be protected. They shall be maintained throughout the construction period and removed in conjunction with the final grading and site stabilization.
2. Filter fabric shall meet the requirements of material specification 592 Geotextile Table 1 or 2, Class I with equivalent opening size of at least 30 for nonwoven and 40 for woven.
3. Fence posts shall be either standard steel post or wood post with a minimum cross-sectional area of 3.0 sq. in.

REFERENCE
Project _____
Designed _____ Date _____
Checked _____ Date _____
Approved _____ Date _____

STANDARD DWG. NO.
IUM-620
SHEET 1 OF 1
DATE 3-16-2012

SILT FENCE WITH WIRE SUPPORT PLAN

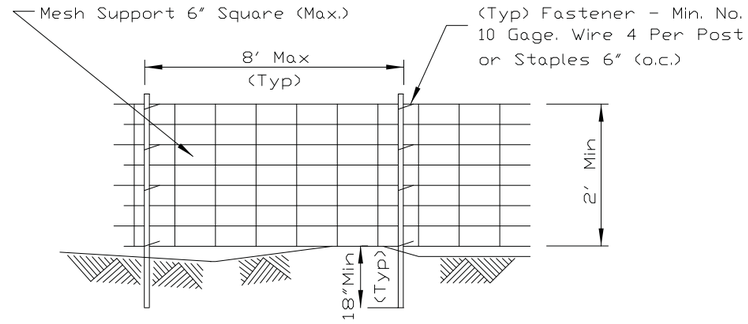

ELEVATION

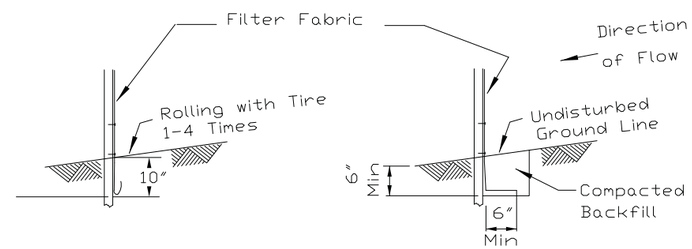

FABRIC ANCHOR DETAIL

STATIC SLICE INSTALLATION TRENCH INSTALLATION

NOTES:

1. Silt Fence shall be installed prior to any grading work in the area to be protected. They shall be maintained throughout the construction period and removed in conjunction with the final grading and site stabilization. Silt fence shall be placed on the flattest area available.
2. Filter fabric shall meet the requirements of material specification 592 Geotextile Table 1 or 2, Class I with equivalent opening size of at least 30 for nonwoven and 40 for woven.
3. Fence posts shall be either standard steel post or wood post with a minimum cross-sectional area of 3.0 sq. in.

REFERENCE
Project _____
Designed _____ Date _____
Checked _____ Date _____
Approved _____ Date _____

STANDARD DWG. NO.
IUM-620A(W)
SHEET 1 OF 1
DATE 3-16-2012

SILT FENCE - SPLICING TWO FENCES

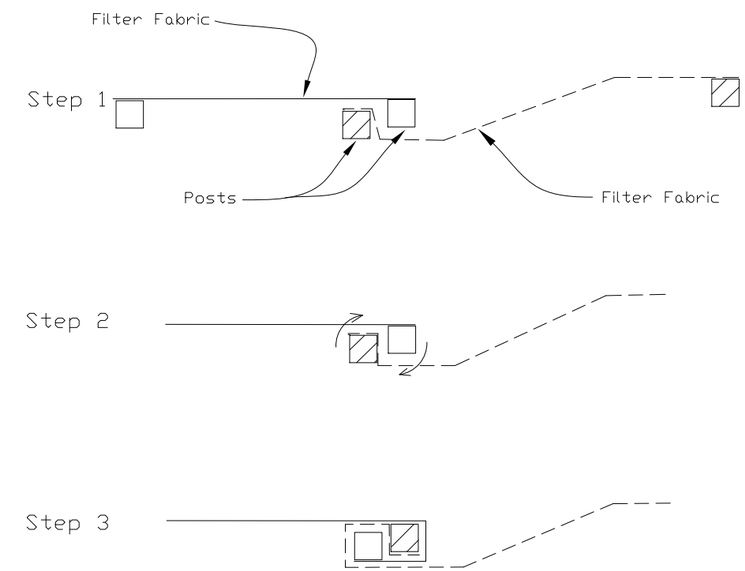

ATTACHING TWO SILT FENCES

NOTES:

1. Place the end post of the second fence inside the end post of the first fence.
2. Rotate both posts at least 180 degrees in a clockwise direction to create a tight seal with the fabric material.
3. Cut the fabric near the bottom of the stakes to accommodate the 6" flap.
4. Drive both posts a minimum of 18 inches into the ground and bury the flap.
5. Compact backfill (particularly at splices) completely to prevent stormwater piping.

REFERENCE
Project _____
Designed _____ Date _____
Checked _____ Date _____
Approved _____ Date _____

STANDARD DWG. NO.
IUM-620B(W)
SHEET 1 OF 1
DATE 3-16-2012

PLOT DRIVER = ...\mjp\dms00314\ces.pdf.plt
PEN TABLE = ...\pentbl\ces.idot.general.tbl
FILE NAME = ...\2637-sht-eros08.dgn

CIVILTECH

USER NAME = mjp	DESIGNED - MJP	REVISED -	
	DRAWN - MJP	REVISED -	
PLOT SCALE = 1.0000 ' / in.	CHECKED - DNM	REVISED -	
PLOT DATE = 10/10/2015	DATE - 10/12/15	REVISED -	

STATE OF ILLINOIS
DEPARTMENT OF TRANSPORTATION

DEERPATH ROAD OVER MILL CREEK
EROSION AND SEDIMENT CONTROL DETAILS

SCALE: N.T.S. | SHEET OF SHEETS | STA. TO STA.

F.A.U. RTE.	SECTION	COUNTY	TOTAL SHEETS	SHEET NO.
2327	07-00068-00-BR	KANE	78	24

CONTRACT NO. 61A88

ILLINOIS FED. AID PROJECT

STABILIZED CONSTRUCTION ENTRANCE PLAN

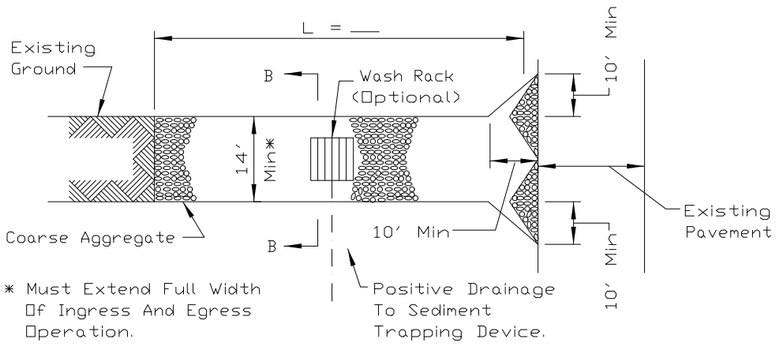

PLAN VIEW

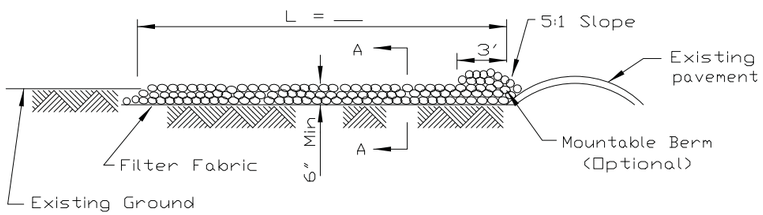

SIDE ELEVATION

NOTES:

1. Filter fabric shall meet the requirements of material specification 592 GEOTEXTILE, Table I or 2, Class I, II or IV and shall be placed over the cleared area prior to the placing of rock.
2. Rock or reclaimed concrete shall meet one of the following IDOT coarse aggregate gradation, CA-1, CA-2, CA-3 or CA-4 and be placed according to construction specification 25 ROCKFILL using placement Method 1 and Class III compaction.
3. Any drainage facilities required because of washing shall be constructed according to manufacturers specifications.
4. If wash racks are used they shall be installed according to the manufacturer's specifications.

REFERENCE			
Project			
Designed		Date	
Checked		Date	
Approved		Date	

NRCS Natural Resources Conservation Service

STANDARD DWG. NO. IL-630
SHEET 1 OF 2
DATE 8-18-94

STABILIZED CONSTRUCTION ENTRANCE PLAN

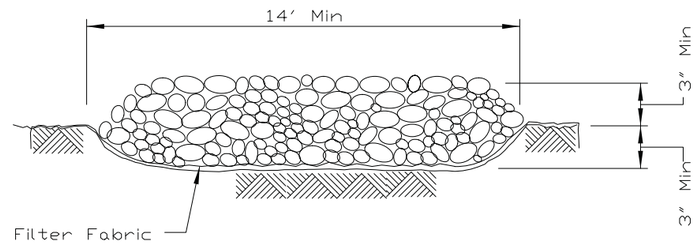

SECTION A-A

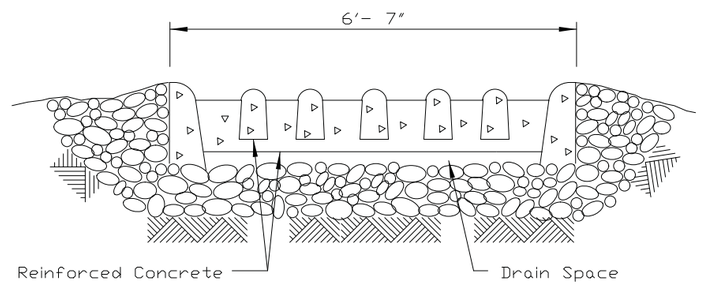

SECTION B-B

REFERENCE			
Project			
Designed		Date	
Checked		Date	
Approved		Date	

NRCS Natural Resources Conservation Service

STANDARD DWG. NO. IL-630
SHEET 2 OF 2
DATE 8-18-94

PLOT DRIVER = ...\mjp\dms00314\cei.pdf.plt
PEN TABLE = ...\pentbl\cei_idot_general.tbl
FILE NAME = ...\2637-sht-eros01.dgn

CIVILTECH	USER NAME = mjp	DESIGNED - MJP	REVISED -
		DRAWN - MJP	REVISED -
	PLOT SCALE = 1.0000 ′/ in.	CHECKED - DNM	REVISED -
	PLOT DATE = 10/10/2015	DATE - 10/12/15	REVISED -

STATE OF ILLINOIS
DEPARTMENT OF TRANSPORTATION

DEERPATH ROAD OVER MILL CREEK
EROSION AND SEDIMENT CONTROL DETAILS

SCALE: N.T.S. | SHEET OF SHEETS | STA. TO STA.

F.A.U. RTE.	SECTION	COUNTY	TOTAL SHEETS	SHEET NO.
2327	07-00068-00-BR	KANE	78	25

CONTRACT NO. 61A88

ILLINOIS FED. AID PROJECT

TEMPORARY CONCRETE WASHOUT FACILITY - STRAW BALE

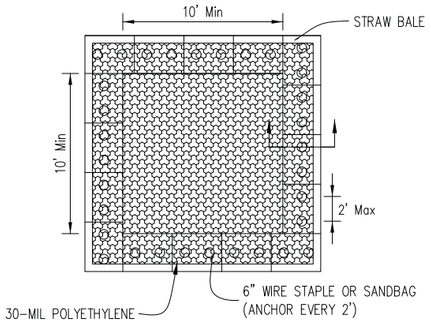

PLAN VIEW

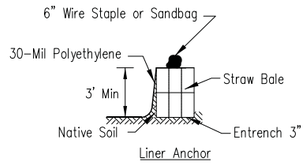

STRAW BALE ANCHOR SECTIONS

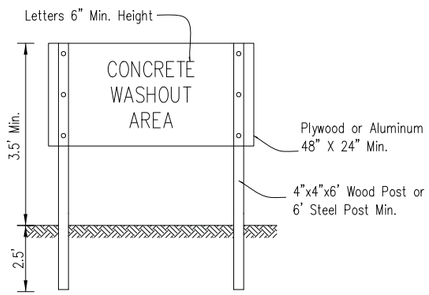

SIGN DETAIL

NOTES:

1. Maintaining temporary concrete washout facilities shall include removing and disposing of hardend concrete and/or slurry and returning the faciliities to a functional condition.
2. Facility shall be cleaned or reconstructed in a new area once washout becomes two-thirds full.
3. Each straw bale is to be staked in place using (2) 2"x2"x4' wooden stakes.

REFERENCE
Project
Designed Date
Checked Date
Approved Date

STANDARD DWG. NO.
IUM-654SB
SHEET 1 OF 3
DATE 6-1-2008

TEMPORARY CONCRETE WASHOUT FACILITY - EARTHEN TYPE

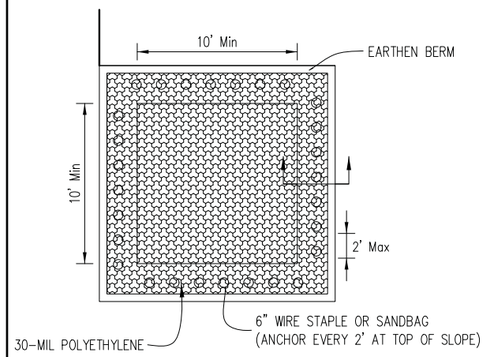

PLAN VIEW

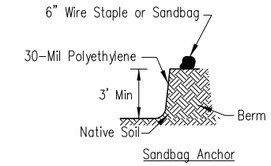

EARTHEN BERM ANCHOR SECTIONS

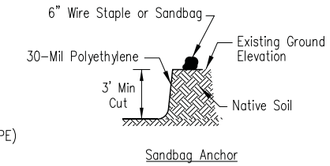

SUBGRADE ANCHOR SECTIONS

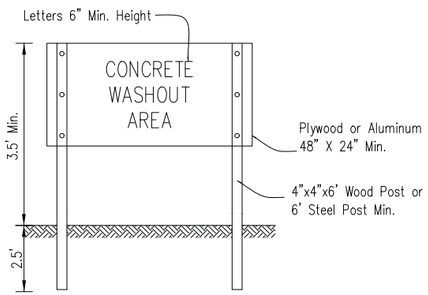

SIGN DETAIL

NOTES:

1. Maintaining temporary concrete washout facilities shall include removing and disposing of hardend concrete and/or slurry and returning the faciliities to a functional condition.
2. Facility shall be cleaned or reconstructed in a new area once washout becomes two-thirds full.

REFERENCE
Project
Designed Date
Checked Date
Approved Date

STANDARD DWG. NO.
IUM-654ET
SHEET 2 OF 3
DATE 6-1-2008

TEMPORARY CONCRETE WASHOUT FACILITY - BARRIER WALL

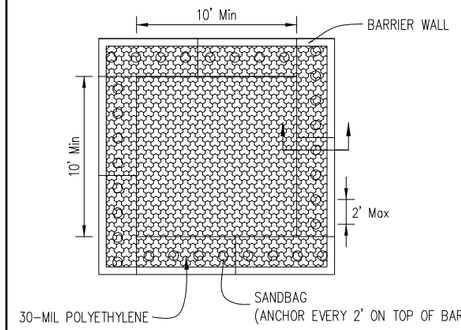

PLAN VIEW

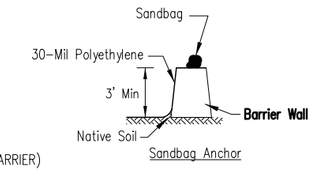

BARRIER WALL ANCHOR SECTION

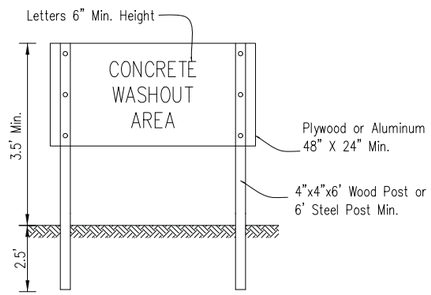

SIGN DETAIL

NOTES:

1. Maintaining temporary concrete washout facilities shall include removing and disposing of hardend concrete and/or slurry and returning the faciliities to a functional condition.
2. Facility shall be cleaned or reconstructed in a new area once washout becomes two-thirds full.

REFERENCE
Project
Designed Date
Checked Date
Approved Date

STANDARD DWG. NO.
IUM-654BW
SHEET 3 OF 3
DATE 6-1-2008

PLOT DRIVER = ...\mjp\dms60314\ce1.pdf.plt
PEN TABLE = ...\pentbl\ce1.idot.general.tbl
FILE NAME = ...\2637-sht-erosl0.dgn

CIVILTECH

USER NAME = mjp	DESIGNED - MJP	REVISED -	
	DRAWN - MJP	REVISED -	
PLOT SCALE = 1.0000 ' / in.	CHECKED - DNM	REVISED -	
PLOT DATE = 10/10/2015	DATE - 10/12/15	REVISED -	

STATE OF ILLINOIS
DEPARTMENT OF TRANSPORTATION

DEERPATH ROAD OVER MILL CREEK
EROSION AND SEDIMENT CONTROL DETAILS

SCALE: N.T.S. | SHEET OF SHEETS | STA. TO STA.

F.A.U. RTE.	SECTION	COUNTY	TOTAL SHEETS	SHEET NO.
2327	07-00068-00-BR	KANE	78	26

CONTRACT NO. 61A88

ILLINOIS FED. AID PROJECT

1 STA 101+35.0, 10.5' RT
INLETS TA T23F&G
RIM = 699.32
INV = 695.32 (12" NW)

2 STA 101+35.0, 13.3' LT
CB TA 4 DIA T23F&G
SNOUT (SEE NOTE 2)
RIM = 699.22
INV = 695.08 (12" SE)
INV = 694.08 (12" NW)

3 STA 101+35.0, 21.0' LT
MAN TA 4 DIA T1F CL
RIM = 699.76
INV = 694.06 (12" SE)
INV = 693.33 (12" NE)

4 STA 103+00.0, 11.5' RT
INLETS TA T23F&G
RIM = 695.02
INV = 691.52 (12" NW)

5 STA 103+00.0, 11.5' LT
CB TA 4 DIA T23F&G
SNOUT (SEE NOTE 2)
RIM = 695.47
INV = 691.29 (12" SE)
INV = 691.19 (12" NW)

6 STA 103+00.0, 25.3' LT
MAN TA 4 DIA T1F CL
RIM = 695.68
INV = 691.11 (12" SE)
INV = 691.85 (12" SW)
INV = 690.65 (18" NE)

7 STA 103+50.0, 11.5' RT
INLETS TA T23F&G
RIM = 694.12
INV = 691.12 (12" NW)

8 STA 103+85.0, 11.5' LT
INLETS TA T23F&G
RIM = 694.28
INV = 691.28 (12" SW)

9 STA 103+50.0, 11.5' LT
CB TA 4 DIA T23F&G
SNOUT (SEE NOTE 2)
RIM = 694.53
INV = 690.95 (12" NE)
INV = 690.89 (12" SE)
INV = 690.77 (12" NW)

10 STA 103+50.0, 24.6' LT
MAN TA 5 DIA T1F CL
RIM = 694.75
INV = 690.70 (12" SE)
INV = 690.20 (18" SW)
INV = 690.10 (24" NW)

11 STA 103+65.0, 44.5' LT
PRC FLAR END SEC 24"
INV = 689.91 (24" SE)

*12 STA 104+20.0, 11.5' RT
CB TA 4 DIA T23F&G
RIM = 693.71
INV = 690.00 (24" NE)

*13 STA 104+60.3, 12.0' RT
CB TA 5 DIA T23F&G
SNOUT (SEE NOTE 2)
RIM = 693.89
INV = 689.64 (24" SW)
INV = 689.64 (24" SE)

14 STA 104+60.3, 41.1' RT
PRC FLAR END SEC 24"
INV = 689.37 (24" NW)

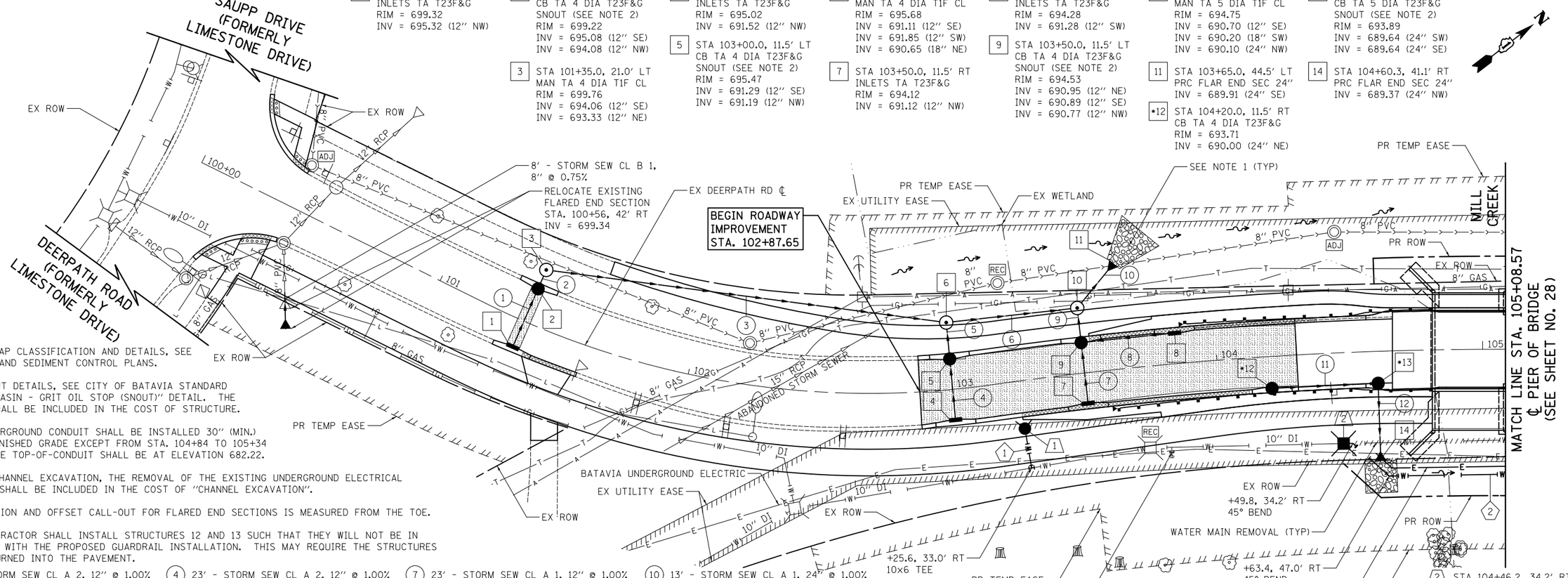

NOTES

1. FOR RIPRAP CLASSIFICATION AND DETAILS, SEE EROSION AND SEDIMENT CONTROL PLANS.
2. FOR SNOUT DETAILS, SEE CITY OF BATAVIA STANDARD "CATCH BASIN - GRIT OIL STOP (SNOUT)" DETAIL. THE SNOUT SHALL BE INCLUDED IN THE COST OF STRUCTURE.
3. THE UNDERGROUND CONDUIT SHALL BE INSTALLED 30" (MIN.) BELOW FINISHED GRADE EXCEPT FROM STA. 104+84 TO 105+34 WHERE THE TOP-OF-CONDUIT SHALL BE AT ELEVATION 682.22.
4. DURING CHANNEL EXCAVATION, THE REMOVAL OF THE EXISTING UNDERGROUND ELECTRICAL CONDUIT SHALL BE INCLUDED IN THE COST OF "CHANNEL EXCAVATION".
5. THE STATION AND OFFSET CALL-OUT FOR FLARED END SECTIONS IS MEASURED FROM THE TOE.

*THE CONTRACTOR SHALL INSTALL STRUCTURES 12 AND 13 SUCH THAT THEY WILL NOT BE IN CONFLICT WITH THE PROPOSED GUARDRAIL INSTALLATION. THIS MAY REQUIRE THE STRUCTURES TO BE TURNED INTO THE PAVEMENT.

(1) 24' - STORM SEW CL A 2, 12" @ 1.00% T.B.F. = 4.0 CU YD
(2) 2' - STORM SEW CL A 2, 12" @ 1.00% T.B.F. = 0.4 CU YD
(3) 148' - STORM SEW CL A 2, 12" @ 1.00% T.B.F. = 48.9 CU YD
(4) 23' - STORM SEW CL A 2, 12" @ 1.00% T.B.F. = 3.3 CU YD
(5) 8' - STORM SEW CL A 2, 12" @ 1.00% T.B.F. = 2.2 CU YD
(6) 45' - STORM SEW CL A 2, 18" @ 1.00% T.B.F. = 16.2 CU YD
(7) 23' - STORM SEW CL A 1, 12" @ 1.00% T.B.F. = 3.1 CU YD
(8) 33' - STORM SEW CL A 1, 12" @ 1.00% T.B.F. = 4.4 CU YD
(9) 7' - STORM SEW CL A 2, 12" @ 1.00% T.B.F. = 1.3 CU YD
(10) 13' - STORM SEW CL A 1, 24" @ 1.00% T.B.F. = 0.0 CU YD
(11) 36' - STORM SEW CL A 1, 24" @ 1.00% T.B.F. = 4.2 CU YD
(12) 21' - STORM SEW CL A 1, 24" @ 1.00% T.B.F. = 2.0 CU YD

(1) STA 103+25.0, 18.0' RT FIRE HYD W/AUX V & VB

(1) 15' - D I WATER MAIN 6"
(2) 317' - D I WATER MAIN 10"

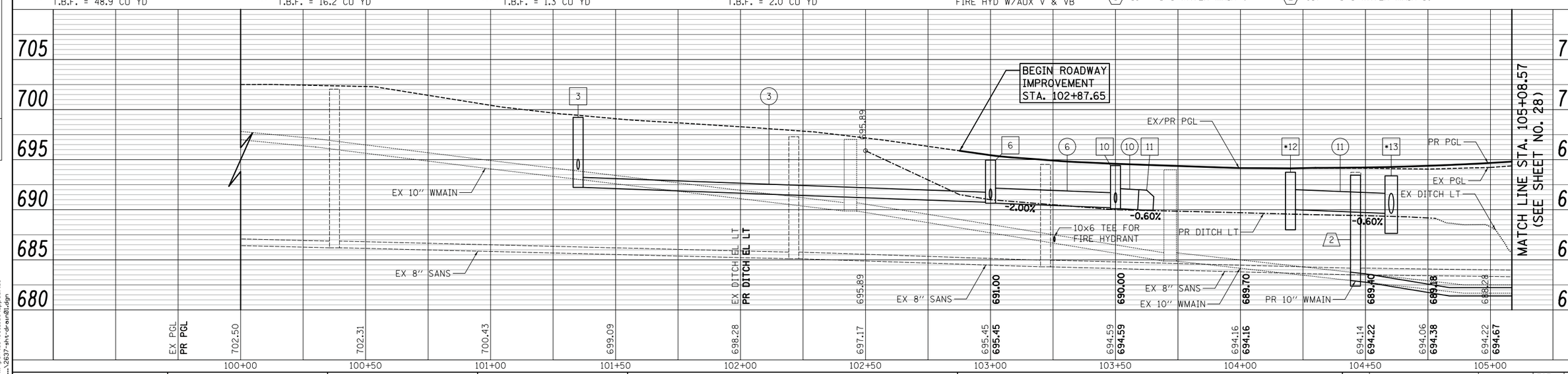

PLAN — SURVEYED / PLOTTED / ALIGNMENT CHECKED / RT. OF WAY CHECKED / CADD FILE NAME / NOTE BOOK NO. / BY / DATE

PROFILE — SURVEYED / PLOTTED / GRADES CHECKED / BM. NOTED / STRUCTURE NOTAT'NS CHK'D / NOTE BOOK NO. / BY / DATE

PLOT DRIVER = ...\mjp\dms80314\cei_pdf.plt
PEN TABLE = ...\pentbl\cei_idot_ppdu.tbl
FILE NAME = ...\2637-sht-drain01.dgn

CIVILTECH

USER NAME = mjp	DESIGNED - MJP	REVISED -
	DRAWN - MJP	REVISED -
PLOT SCALE = 20.0000 ' / in.	CHECKED - DNM	REVISED -
PLOT DATE = 10/10/2015	DATE - 10/12/15	REVISED -

STATE OF ILLINOIS
DEPARTMENT OF TRANSPORTATION

DEERPATH ROAD OVER MILL CREEK
DRAINAGE AND UTILITIES PLAN AND PROFILE

SCALE: 1" = 20' | SHEET OF SHEETS | STA. 102+87.65 TO STA. 105+08.57

F.A.U. RTE.	SECTION	COUNTY	TOTAL SHEETS	SHEET NO.
2327	07-00068-00-BR	KANE	78	27

CONTRACT NO. 61A88

ILLINOIS FED. AID PROJECT

*15 STA 105+62.5, 11.5' RT
CB TA 4 DIA T23F&G
SNOUT (SEE NOTE 2)
RIM = 695.58
INV = 690.33 (24'' SE)

16 STA 105+62.5, 46.2' RT
PRC FLAR END SEC 24''
INV = 690.00 (24'' NW)

17 STA 106+50.0, 11.5' RT
CB TA 4 DIA T23F&G
SNOUT (SEE NOTE 2)
RIM = 698.45
INV = 690.49 (24'' SE)

18 STA 106+50.0, 64.6' RT
PRC FLAR END SEC 24''
INV = 690.00 (24'' NW)

19 STA 108+00.0, 11.5' LT
INLETS TA T23F&G
RIM = 704.56
INV = 701.26 (12'' SW)

20 STA 107+70.0, 11.5' LT
CB TA 4 DIA T23F&G
SNOUT (SEE NOTE 2)
RIM = 703.57
INV = 700.99 (12'' NE)
INV = 700.98 (12'' NW)

21 STA 107+70.0, 33.7' LT
PRC FLAR END SEC 12''
INV = 700.80 (12'' SE)

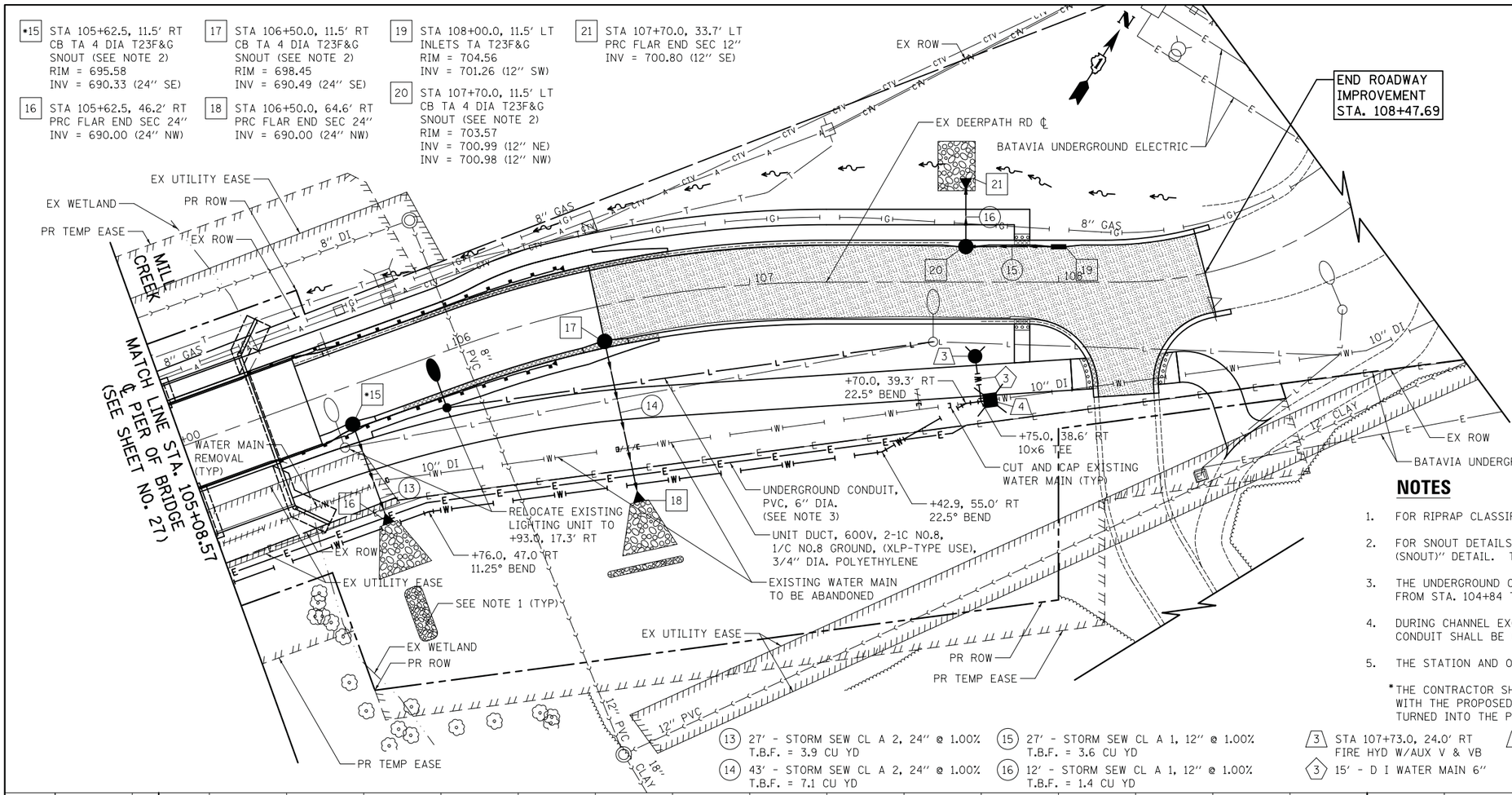

UTILITY CROSSINGS TABLE

UTILITIES CROSSING	STATION	OFFSET	DIR.	UTILITY BOTTOM ELEVATION	UTILITY TOP ELEVATION	CLEARANCE (INCHES)
STORM OVER SANITARY	101+48.7	24.4	LT	693.05	686.19	82.3
STORM OVER SANITARY	102+70.5	30.2	LT	691.94	685.37	78.8
STORM OVER SANITARY	103+64.3	39.0	LT	689.74	684.70	60.5
STORM OVER ELECTRIC	104+60.3	40.0	RT	689.12	686.87	27.0
STORM OVER ELECTRIC	105+62.5	44.0	RT	689.77	687.50	27.2
STORM OVER ELECTRIC	106+50.0	55.9	RT	689.84	687.50	28.1
STORM OVER WATER	106+50.0	58.9	RT	689.81	687.35	29.5
ELECTRIC OVER WATER	107+49.6	51.1	RT	697.00	693.84	37.9
ELECTRIC OVER SANITARY	106+05.9	50.4	RT	689.46	682.86	79.2
WATER OVER SANITARY	106+06.0	53.5	RT	684.85	682.83	24.2

NOTES

1. FOR RIPRAP CLASSIFICATION AND DETAILS, SEE EROSION AND SEDIMENT CONTROL PLANS.
2. FOR SNOUT DETAILS, SEE CITY OF BATAVIA STANDARD ''CATCH BASIN - GRIT OIL STOP (SNOUT)'' DETAIL. THE SNOUT SHALL BE INCLUDED IN THE COST OF STRUCTURE.
3. THE UNDERGROUND CONDUIT SHALL BE INSTALLED 30'' (MIN.) BELOW FINISHED GRADE EXCEPT FROM STA. 104+84 TO 105+34 WHERE THE TOP-OF-CONDUIT SHALL BE AT ELEVATION 682.22.
4. DURING CHANNEL EXCAVATION, THE REMOVAL OF THE EXISTING UNDERGROUND ELECTRICAL CONDUIT SHALL BE INCLUDED IN THE COST OF ''CHANNEL EXCAVATION''.
5. THE STATION AND OFFSET CALL-OUT FOR FLARED END SECTIONS IS MEASURED FROM THE TOE.

*THE CONTRACTOR SHALL INSTALL STRUCTURE 15 SUCH THAT IT WILL NOT BE IN CONFLICT WITH THE PROPOSED GUARDRAIL INSTALLATION. THIS MAY REQUIRE THE STRUCTURE TO BE TURNED INTO THE PAVEMENT.

(13) 27' - STORM SEW CL A 2, 24'' @ 1.00%
T.B.F. = 3.9 CU YD

(14) 43' - STORM SEW CL A 2, 24'' @ 1.00%
T.B.F. = 7.1 CU YD

(15) 27' - STORM SEW CL A 1, 12'' @ 1.00%
T.B.F. = 3.6 CU YD

(16) 12' - STORM SEW CL A 1, 12'' @ 1.00%
T.B.F. = 1.4 CU YD

3 STA 107+73.0, 24.0' RT
FIRE HYD W/AUX V & VB

3 15' - D I WATER MAIN 6''

4 STA 107+77.9, 38.2' RT
VV TA 4 DIA T1F CL
WATER VALVES 10''
RIM = 703.69

DEERPATH ROAD

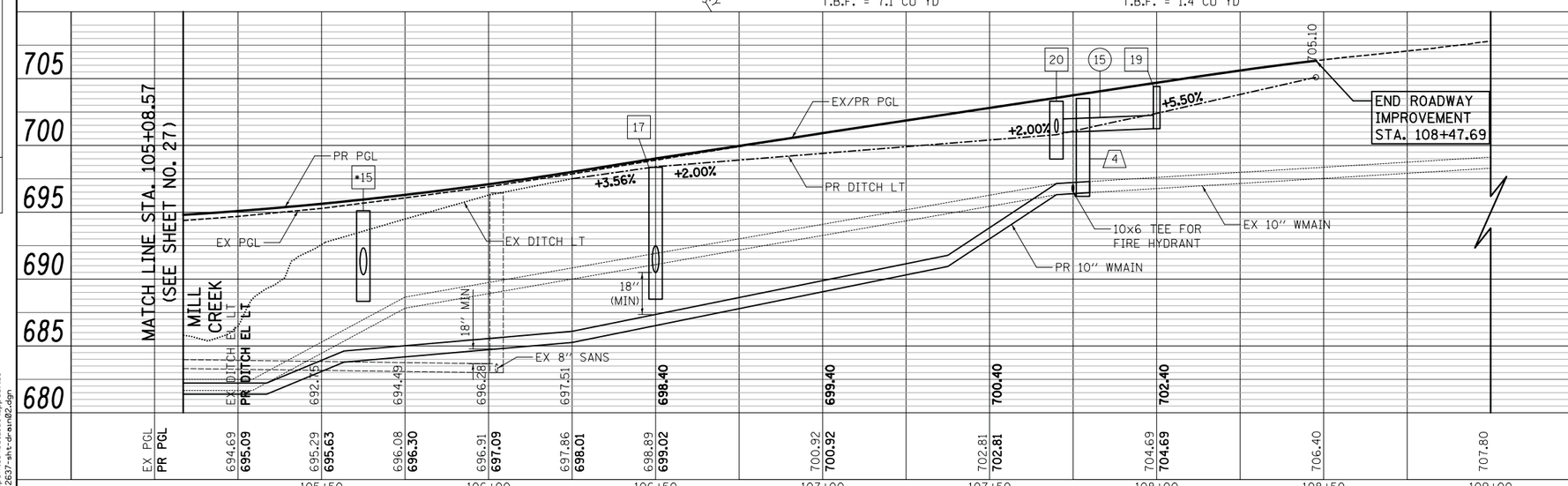

WATER MAIN CONSTRUCTION SEQUENCE

1. CLOSE EXISTING VALVES IN VALVE VAULTS ON NORTH END (2 VALVES) AND SOUTH END (2 VALVES) OF DEERPATH ROAD TO ISOLATE THE EXISTING WATER MAIN IN PROJECT AREA.
2. INSTALL VALVE VAULT AND WATER VALVE (WATER STRUCTURE NO. 4) WITH VALVE IN CLOSED POSITION.
3. OPEN THE EXISTING VALVES ON NORTH END OF DEERPATH ROAD.
4. INSTALL VALVE VAULT AND WATER VALVE (WATER STRUCTURE NO. 2) WITH VALVE IN CLOSED POSITION. ALSO INSTALL FIRE HYDRANT (WATER STRUCTURE NO. 1) TO EXISTING WATER MAIN.
5. OPEN THE EXISTING VALVES ON SOUTH END OF DEERPATH ROAD.
6. CONSTRUCT PROPOSED WATER MAIN AND REMAINING WATER ITEMS.
7. TEST THE WATER MAIN ACCORDING TO THE WATER AND SEWER SPECIFICATIONS AND SPECIAL PROVISIONS. COPPER WHIPS WILL BE PROVIDED WITH EACH WATER VALVE AND THE COST SHALL BE INCLUDED AS PART OF ''WATER VALVES, SIZE AS NOTED''.
8. MAKE PROPOSED WATER MAIN OPERATIONAL AND REMOVE EXISTING WATER MAIN AS SHOWN IN THE PLANS.

PLAN: NOTE BOOK NO.____ | SURVEYED | PLOTTED | ALIGNMENT CHECKED | RT. OF WAY CHECKED | CADD FILE NAME | BY | DATE

PROFILE: NOTE BOOK NO.____ | SURVEYED | PLOTTED | GRADES CHECKED | B.M. NOTED | STRUCTURE NOTATNS CHKD | BY | DATE

PLOT DRIVER = ...\mjp\dms80314\ceiplot.pltcfg
PEN TABLE = ...\pentbl\ceiplot.tbl
FILE NAME = ...\2637-sht-dr-ar02.dgn

CIVILTECH

USER NAME = mjp	DESIGNED - MJP	REVISED -
	DRAWN - MJP	REVISED -
PLOT SCALE = 20.0000 ' / in.	CHECKED - DNM	REVISED -
PLOT DATE = 10/10/2015	DATE - 10/12/15	REVISED -

STATE OF ILLINOIS
DEPARTMENT OF TRANSPORTATION

DEERPATH ROAD OVER MILL CREEK
DRAINAGE AND UTILITIES PLAN AND PROFILE

SCALE: 1'' = 20' | SHEET OF SHEETS | STA. 105+08.57 TO STA.108+47.69

F.A.U. RTE.	SECTION	COUNTY	TOTAL SHEETS	SHEET NO.
2327	07-00068-00-BR	KANE	78	28

CONTRACT NO. 61A88

ILLINOIS FED. AID PROJECT

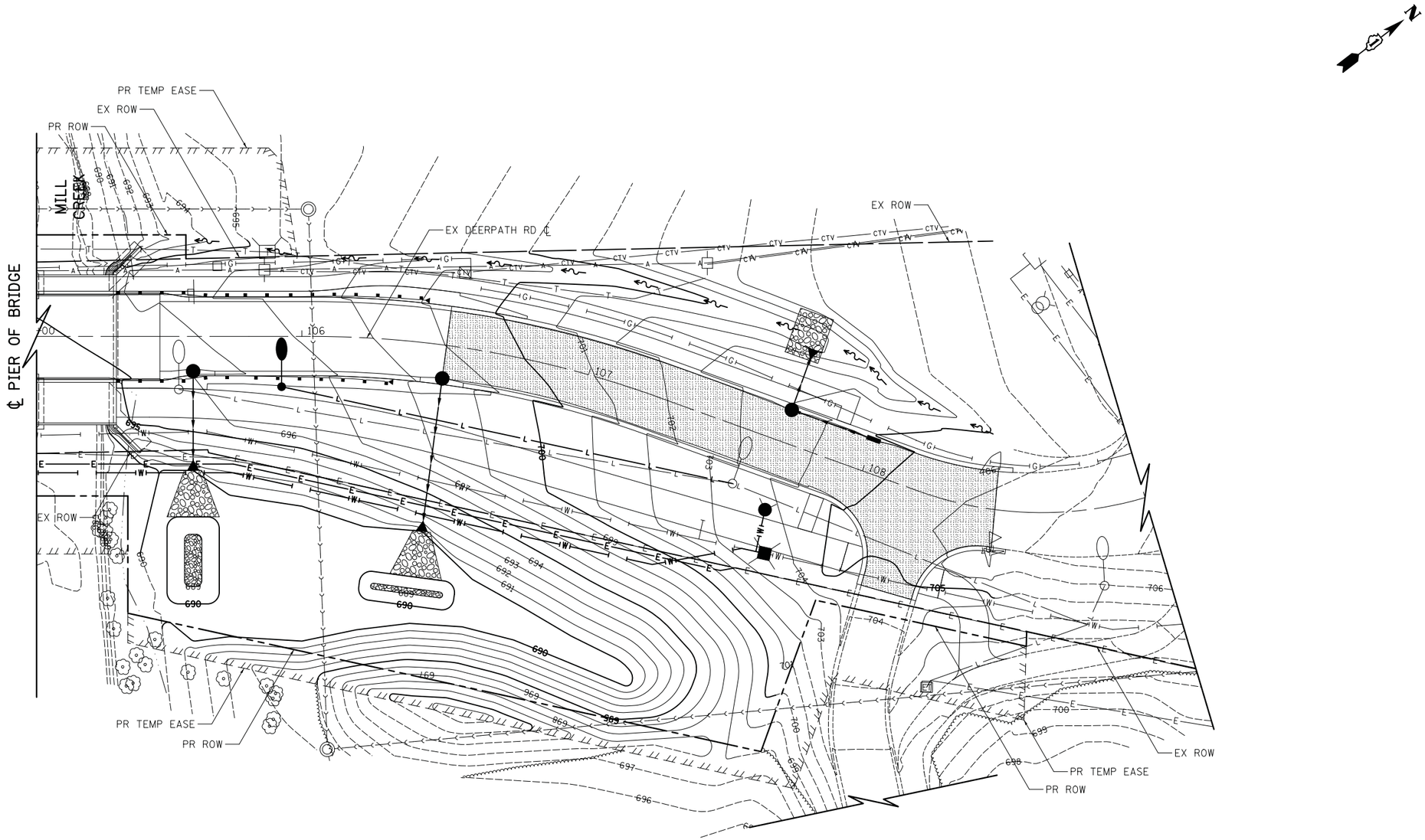

PLOT DRIVER = ...\mjp\dms00314\ceu_pdf.plt
PEN TABLE = ...\pentbl\ceu_idot_general.tbl
FILE NAME = ...\2637-sht-drain03.dgn

CIVILTECH

USER NAME = mjp	DESIGNED - MJP	REVISED -	
	DRAWN - MJP	REVISED -	
PLOT SCALE = 20.0000 ' / in.	CHECKED - DNM	REVISED -	
PLOT DATE = 10/10/2015	DATE - 10/12/15	REVISED -	

STATE OF ILLINOIS
DEPARTMENT OF TRANSPORTATION

DEERPATH ROAD OVER MILL CREEK
COMPENSATORY STORAGE GRADING PLAN

SCALE: 1" = 20' | SHEET OF SHEETS | STA. 105+08.57 TO STA.108+47.69

F.A.U. RTE.	SECTION	COUNTY	TOTAL SHEETS	SHEET NO.
2327	07-00068-00-BR	KANE	78	29

CONTRACT NO. 61A88

ILLINOIS FED. AID PROJECT

PART OF THE SOUTH 1/2 OF SEC. 20, TWP. 39 N., R. 8 E. OF THE 3RD. P.M., IN KANE COUNTY, ILLINOIS.

TOTAL SHEETS	SHEET NO.
78	30

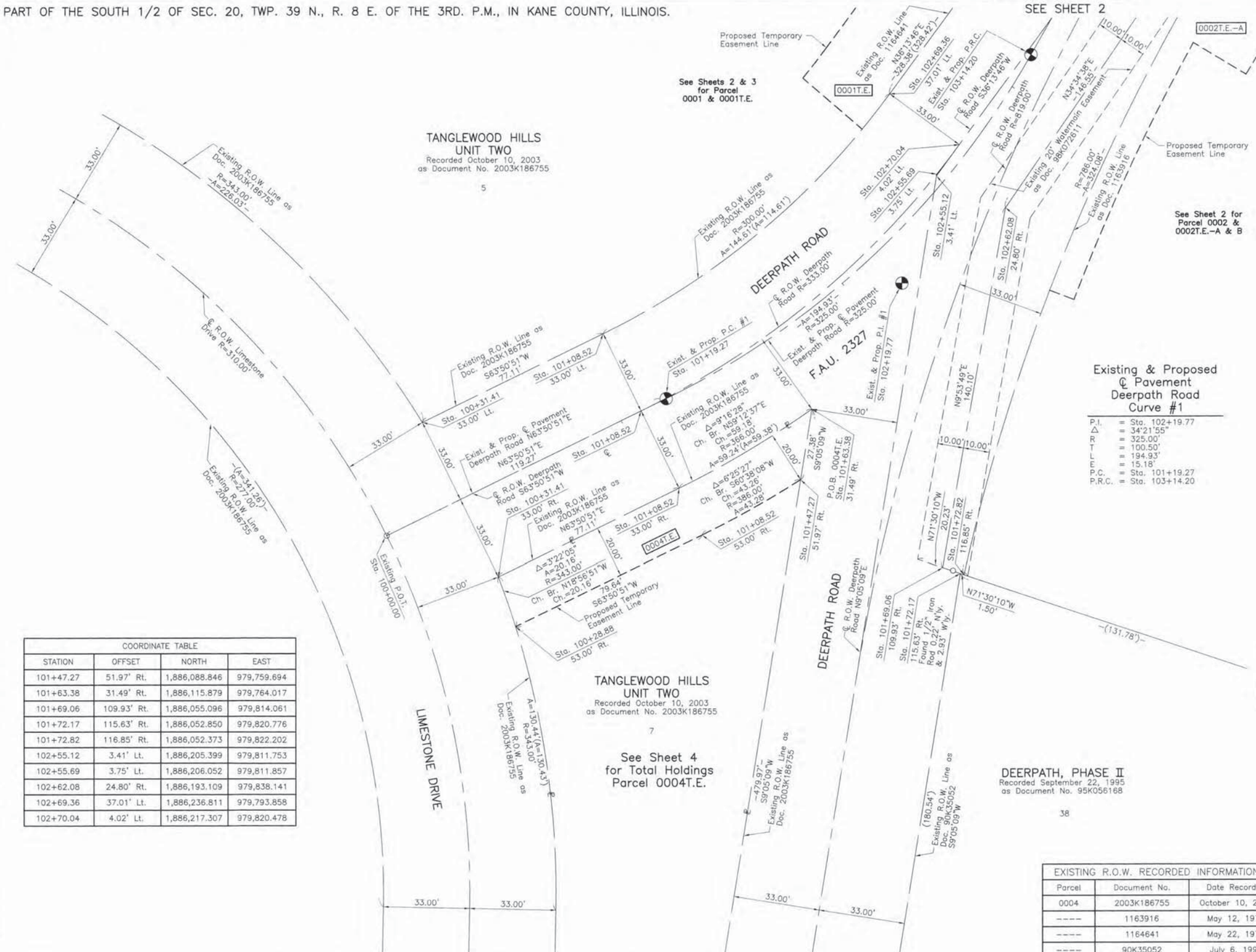

LEGEND

SECTION CORNER 9 10 16 15 — 16 — 15 QUARTER SECTION CORNER

SECTION LINE
QUARTER SECTION LINE
QUARTER, QUARTER SECTION LINE
PLATTED LOT LINE
℄ PROPERTY (DEED) LINE
APL APPARENT PROPERTY LINE
CENTER LINE
EXISTING RIGHT OF WAY LINE
PROPOSED RIGHT OF WAY LINE
PROPOSED EASEMENT
120.32' MEASURED DIMENSION
129.32'(Comp.) COMPUTED DIMENSION
( ) RECORD DATA
EXISTING BUILDING

N

SCALE: 1"=20'

Bearings and Coordinates are referenced to the Illinois Coordinate System NAD 83(2007) East Zone.

○ IRON PIPE OR ROD FOUND ⊕ "MAG" NAIL SET
+ CUT CROSS FOUND OR SET ● 5/8" REBAR SET

● T1 T2 T3 ***THESE STAKES REFERENCE FOUND OR SET MONUMENTATION.*** SET 5/8 INCH IRON ROD FLUSH WITH GROUND TO TIE FOUND IRON STAKE. IDENTIFIED BY COLORED PLASTIC CAP BEARING SURVEYORS REGISTRATION NUMBER.

● BT1 BT2 BT3 ***THESE STAKES, IN CULTIVATED AREAS, REFERENCE FOUND OR SET MONUMENTATION.*** BURIED 5/8 INCH IRON ROD 20 INCHES BELOW GROUND TO TIE FOUND IRON STAKE. IDENTIFIED BY COLORED PLASTIC CAP BEARING SURVEYORS REGISTRATION NUMBER.

■ ***STAKING OF PROPOSED RIGHT OF WAY.*** SET DIVISION OF HIGHWAYS SURVEY MARKER TO MONUMENT THE POSITION SHOWN. IDENTIFIED BY INSCRIPTION DATA AND SURVEYORS REGISTRATION NUMBER.

■ M ***STAKING OF PROPOSED RIGHT OF WAY IN CULTIVATED AREAS.*** BURIED 5/8 INCH METAL ROD 20 INCHES BELOW GROUND TO MARK FUTURE SURVEY MARKER POSITION IDENTIFIED BY COLORED PLASTIC CAP BEARING SURVEYORS REGISTRATION NUMBER.

PERMANENT SURVEY MARKER, I.D.O.T STD 2135 (TO BE SET BY OTHERS)

□ RIGHT OF WAY STAKING PROPOSED TO BE SET.

STATE OF ILLINOIS }
COUNTY OF LAKE } SS

THIS IS TO CERTIFY THAT WE, JORGENSEN & ASSOCIATES, INC., AN ILLINOIS PROFESSIONAL DESIGN FIRM LAND SURVEYING CORPORATION, NUMBER 184-2771, HAVE SURVEYED THE PLAT OF HIGHWAYS SHOWN HEREON IN SECTION 20, TOWNSHIP 39N., RANGE 8E., OF THE THIRD PRINCIPAL MERIDIAN, KANE COUNTY, THAT THE SURVEY IS TRUE AND COMPLETE AS SHOWN TO THE BEST OF MY KNOWLEDGE AND BELIEF, THAT THE PLAT CORRECTLY REPRESENTS SAID SURVEY, THAT ALL MONUMENTS FOUND AND ESTABLISHED ARE OF PERMANENT QUALITY AND OCCUPY THE POSITIONS SHOWN THEREON AND THAT THE MONUMENTS ARE SUFFICIENT TO ENABLE THE SURVEY TO BE RETRACED. MADE FOR THE DEPARTMENT OF TRANSPORTATION, STATE OF ILLINOIS.

DATED AT LAKE VILLA, ILLINOIS THIS 5th DAY OF October 2013 A.D.

CHRISTIAN H. JORGENSEN 2797 PROFESSIONAL LAND SURVEYOR STATE OF ILLINOIS LAKE VILLA, ILLINOIS

PRESIDENT
ILLINOIS PROFESSIONAL LAND SURVEYOR NO. 35-2797
LICENSE EXPIRATION DATE: NOVEMBER 30, 2014

THIS PROFESSIONAL SERVICE CONFORMS TO THE CURRENT ILLINOIS MINIMUM STANDARDS FOR A BOUNDARY SURVEY.
Note: Surface Coordinates are Shown.

COORDINATE TABLE

STATION	OFFSET	NORTH	EAST
100+28.88	53.00' Rt.	1,886,032.532	979,650.510
100+31.41	33.00' Lt.	1,886,110.842	979,614.874
100+31.41	33.00' Rt.	1,886,051.599	979,643.964
101+08.52	33.00' Lt.	1,886,144.830	979,684.090
101+08.52	℄	1,886,115.208	979,698.635
101+08.52	33.00' Rt.	1,886,085.586	979,713.180
101+08.52	53.00' Rt.	1,886,067.634	979,721.995

JORGENSEN & ASSOCIATES, INC.
120 PARK AVENUE
LAKE VILLA, ILLINOIS 60046
(847) 356-3371

SHEET 1 IS A COVER SHEET AND IS NOT RECORDED.

COORDINATE TABLE

STATION	OFFSET	NORTH	EAST
101+47.27	51.97' Rt.	1,886,088.846	979,759.694
101+63.38	31.49' Rt.	1,886,115.879	979,764.017
101+69.06	109.93' Rt.	1,886,055.096	979,814.061
101+72.17	115.63' Rt.	1,886,052.850	979,820.776
101+72.82	116.85' Rt.	1,886,052.373	979,822.202
102+55.12	3.41' Lt.	1,886,205.399	979,811.753
102+55.69	3.75' Lt.	1,886,206.052	979,811.857
102+62.08	24.80' Rt.	1,886,193.109	979,838.141
102+69.36	37.01' Lt.	1,886,236.811	979,793.858
102+70.04	4.02' Lt.	1,886,217.307	979,820.478

EXISTING R.O.W. RECORDED INFORMATION

Parcel	Document No.	Date Recorded
0004	2003K186755	October 10, 2003
----	1163916	May 12, 1970
----	1164641	May 22, 1970
----	90K35052	July 6, 1990
----	2003K186755	October 10, 2003

PARCEL NUMBER	OWNER	TOTAL HOLDINGS ACRES	PART TAKEN ACRES	AREA IN EXISTING R.O.W. ACRES	REMAINDER AREA ACRES	EASEMENT AREA ACRES	EASEMENT PURPOSE	PERMANENT INDEX NUMBER	PROPERTY ACQUIRED BY
0004T.E.	Tanglewood Hills Homeowners Association, an Illinois not-for-profit corporation	0.686	N/A	N/A	0.686	0.059	Grading	12-20-406-001	

PLAT OF HIGHWAYS
STATE OF ILLINOIS
DEPARTMENT OF TRANSPORTATION

F.A.U. 2327 (DEERPATH ROAD)

SECTION 07-00068-00-BR *KANE COUNTY*
PROJECT *JOB NO. R-55-001-97*
STATION 100+00.00 *TO STATION 103+14.20*
SCALE: 1"=20' *SHEET 2A OF 6*

BUREAU OF LAND ACQUISITION
201 WEST CENTER COURT
SCHAUMBURG, ILLINOIS 60196

REVISION DATE March 21, 2015 REVISION Ownership Parcel 0004T.E. MADE BY

ROUTE F.A.U. 2327 (DEERPATH ROAD) SECTION 07-00068-00-BR COUNTY KANE JOB NO. R-55-001-97 RECORDING: RECORDED ON AS DOCUMENT NO.

TOTAL SHEETS	SHEET NO.
78	31

PART OF THE SOUTH 1/2 OF SEC. 20, TWP. 39 N., R. 8 E. OF THE 3RD. P.M., IN KANE COUNTY, ILLINOIS.

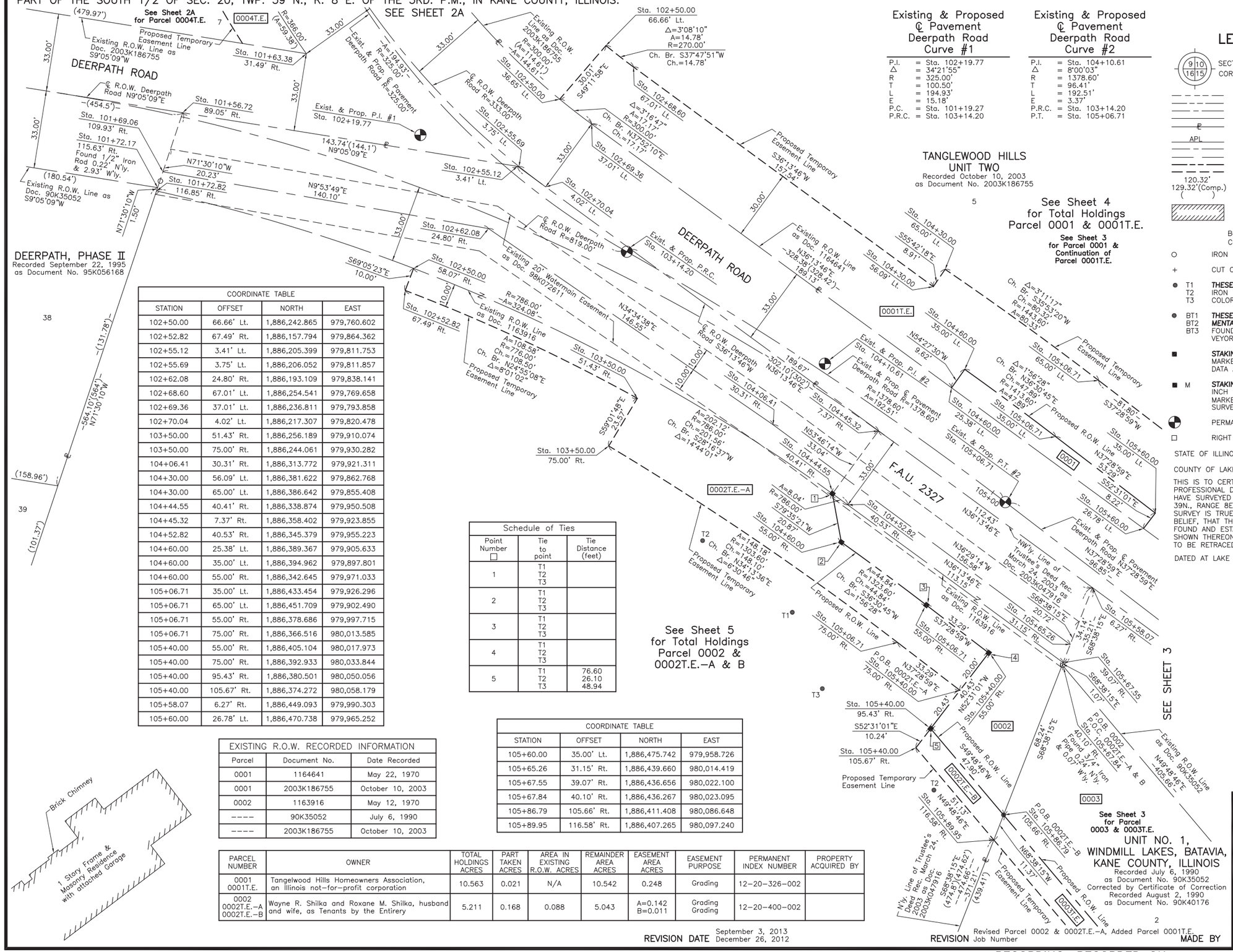

Existing & Proposed ℄ Pavement Deerpath Road Curve #1

P.I.	=	Sta. 102+19.77
Δ	=	34°21'55"
R	=	325.00'
T	=	100.50'
L	=	194.93'
E	=	15.18'
P.C.	=	Sta. 101+19.27
P.R.C.	=	Sta. 103+14.20

Existing & Proposed ℄ Pavement Deerpath Road Curve #2

P.I.	=	Sta. 104+10.61
Δ	=	8°00'03"
R	=	1378.60'
T	=	96.41'
L	=	192.51'
E	=	3.37'
P.R.C.	=	Sta. 103+14.20
P.T.	=	Sta. 105+06.71

LEGEND

SECTION CORNER (9 10 16 15) — QUARTER SECTION CORNER (16 15)

- SECTION LINE
- QUARTER SECTION LINE
- QUARTER, QUARTER SECTION LINE
- PLATTED LOT LINE
- ℄ PROPERTY (DEED) LINE
- APL APPARENT PROPERTY LINE
- CENTER LINE
- EXISTING RIGHT OF WAY LINE
- PROPOSED RIGHT OF WAY LINE
- PROPOSED EASEMENT
- 120.32' MEASURED DIMENSION
- 129.32'(Comp.) COMPUTED DIMENSION
- ( ) RECORD DATA
- EXISTING BUILDING

0 20' 40'
SCALE: 1"=20'

Bearings and Coordinates are referenced to the Illinois Coordinate System NAD 83(2007) East Zone.

- ○ IRON PIPE OR ROD FOUND
- ⊕ "MAG" NAIL SET
- + CUT CROSS FOUND OR SET
- ● 5/8" REBAR SET
- ● T1 T2 T3 ***THESE STAKES REFERENCE FOUND OR SET MONUMENTATION.*** SET 5/8 INCH IRON ROD FLUSH WITH GROUND TO TIE FOUND IRON STAKE. IDENTIFIED BY COLORED PLASTIC CAP BEARING SURVEYORS REGISTRATION NUMBER.
- ● BT1 BT2 BT3 ***THESE STAKES, IN CULTIVATED AREAS, REFERENCE FOUND OR SET MONUMENTATION.*** BURIED 5/8 INCH IRON ROD 20 INCHES BELOW GROUND TO TIE FOUND IRON STAKE. IDENTIFIED BY COLORED PLASTIC CAP BEARING SURVEYORS REGISTRATION NUMBER.
- ■ ***STAKING OF PROPOSED RIGHT OF WAY.*** SET DIVISION OF HIGHWAYS SURVEY MARKER TO MONUMENT THE POSITION SHOWN. IDENTIFIED BY INSCRIPTION DATA AND SURVEYORS REGISTRATION NUMBER.
- ■ M ***STAKING OF PROPOSED RIGHT OF WAY IN CULTIVATED AREAS.*** BURIED 5/8 INCH METAL ROD 20 INCHES BELOW GROUND TO MARK FUTURE SURVEY MARKER POSITION IDENTIFIED BY COLORED PLASTIC CAP BEARING SURVEYORS REGISTRATION NUMBER.
- ⊕ PERMANENT SURVEY MARKER, I.D.O.T STD 2135 (TO BE SET BY OTHERS)
- □ RIGHT OF WAY STAKING PROPOSED TO BE SET.

STATE OF ILLINOIS }
COUNTY OF LAKE } SS

THIS IS TO CERTIFY THAT WE, JORGENSEN & ASSOCIATES, INC., AN ILLINOIS PROFESSIONAL DESIGN FIRM LAND SURVEYING CORPORATION, NUMBER 184–2771, HAVE SURVEYED THE PLAT OF HIGHWAYS SHOWN HEREON IN SECTION 20, TOWNSHIP 39N., RANGE 8E., OF THE THIRD PRINCIPAL MERIDIAN, KANE COUNTY, THAT THE SURVEY IS TRUE AND COMPLETE AS SHOWN TO THE BEST OF MY KNOWLEDGE AND BELIEF, THAT THE PLAT CORRECTLY REPRESENTS SAID SURVEY, THAT ALL MONUMENTS FOUND AND ESTABLISHED ARE OF PERMANENT QUALITY AND OCCUPY THE POSITIONS SHOWN THEREON AND THAT THE MONUMENTS ARE SUFFICIENT TO ENABLE THE SURVEY TO BE RETRACED. MADE FOR THE DEPARTMENT OF TRANSPORTATION, STATE OF ILLINOIS.

DATED AT LAKE VILLA, ILLINOIS THIS _____ DAY OF_____20___ A.D.

_____ PRESIDENT

ILLINOIS PROFESSIONAL LAND SURVEYOR NO. 35–2797
LICENSE EXPIRATION DATE: NOVEMBER 30, 2014

THIS PROFESSIONAL SERVICE CONFORMS TO THE CURRENT ILLINOIS MINIMUM STANDARDS FOR A BOUNDARY SURVEY.
Note: Surface Coordinates are Shown.

COORDINATE TABLE			
STATION	OFFSET	NORTH	EAST
101+56.72	89.05' Rt.	1,886,063.462	979,789.054
101+63.38	31.49' Rt.	1,886,115.879	979,764.017
101+69.06	109.93' Rt.	1,886,055.096	979,814.061
101+72.17	115.63' Rt.	1,886,052.850	979,820.776
101+72.82	116.85' Rt.	1,886,052.373	979,822.202
102+50.00	36.65' Lt.	1,886,223.256	979,783.318
102+50.00	58.07' Rt.	1,886,161.363	979,855.020

JORGENSEN & ASSOCIATES, INC.
120 PARK AVENUE
LAKE VILLA, ILLINOIS 60046
(847) 356–3371

SHEET 1 IS A COVER SHEET AND IS NOT RECORDED.

COORDINATE TABLE			
STATION	OFFSET	NORTH	EAST
102+50.00	66.66' Lt.	1,886,242.865	979,760.602
102+52.82	67.49' Rt.	1,886,157.794	979,864.362
102+55.12	3.41' Lt.	1,886,205.399	979,811.753
102+55.69	3.75' Lt.	1,886,206.052	979,811.857
102+62.08	24.80' Rt.	1,886,193.109	979,838.141
102+68.60	67.01' Lt.	1,886,254.541	979,769.658
102+69.36	37.01' Lt.	1,886,236.811	979,793.858
102+70.04	4.02' Lt.	1,886,217.307	979,820.478
103+50.00	51.43' Rt.	1,886,256.189	979,910.074
103+50.00	75.00' Rt.	1,886,244.061	979,930.282
104+06.41	30.31' Rt.	1,886,313.772	979,921.311
104+30.00	56.09' Lt.	1,886,381.622	979,862.768
104+30.00	65.00' Lt.	1,886,386.642	979,855.408
104+44.55	40.41' Rt.	1,886,338.874	979,950.508
104+45.32	7.37' Rt.	1,886,358.402	979,923.855
104+52.82	40.53' Rt.	1,886,345.379	979,955.223
104+60.00	25.38' Lt.	1,886,389.367	979,905.633
104+60.00	35.00' Lt.	1,886,394.962	979,897.801
104+60.00	55.00' Rt.	1,886,342.645	979,971.033
105+06.71	35.00' Lt.	1,886,433.454	979,926.296
105+06.71	65.00' Lt.	1,886,451.709	979,902.490
105+06.71	55.00' Rt.	1,886,378.686	979,997.715
105+06.71	75.00' Rt.	1,886,366.516	980,013.585
105+40.00	55.00' Rt.	1,886,405.104	980,017.973
105+40.00	75.00' Rt.	1,886,392.933	980,033.844
105+40.00	95.43' Rt.	1,886,380.501	980,050.056
105+40.00	105.67' Rt.	1,886,374.272	980,058.179
105+58.07	6.27' Rt.	1,886,449.093	979,990.303
105+60.00	26.78' Lt.	1,886,470.738	979,965.252

Schedule of Ties		
Point Number □	Tie to point	Tie Distance (feet)
1	T1 T2 T3	
2	T1 T2 T3	
3	T1 T2 T3	
4	T1 T2 T3	
5	T1 T2 T3	76.60 26.10 48.94

EXISTING R.O.W. RECORDED INFORMATION		
Parcel	Document No.	Date Recorded
0001	1164641	May 22, 1970
0001	2003K186755	October 10, 2003
0002	1163916	May 12, 1970
----	90K35052	July 6, 1990
----	2003K186755	October 10, 2003

COORDINATE TABLE			
STATION	OFFSET	NORTH	EAST
105+60.00	35.00' Lt.	1,886,475.742	979,958.726
105+65.26	31.15' Rt.	1,886,439.660	980,014.419
105+67.55	39.07' Rt.	1,886,436.656	980,022.100
105+67.84	40.10' Rt.	1,886,436.267	980,023.095
105+86.79	105.66' Rt.	1,886,411.408	980,086.648
105+89.95	116.58' Rt.	1,886,407.265	980,097.240

PARCEL NUMBER	OWNER	TOTAL HOLDINGS ACRES	PART TAKEN ACRES	AREA IN EXISTING R.O.W. ACRES	REMAINDER AREA ACRES	EASEMENT AREA ACRES	EASEMENT PURPOSE	PERMANENT INDEX NUMBER	PROPERTY ACQUIRED BY
0001 0001T.E.	Tangelwood Hills Homeowners Association, an Illinois not–for–profit corporation	10.563	0.021	N/A	10.542	0.248	Grading	12–20–326–002	
0002 0002T.E.–A 0002T.E.–B	Wayne R. Shilka and Roxane M. Shilka, husband and wife, as Tenants by the Entirery	5.211	0.168	0.088	5.043	A=0.142 B=0.011	Grading Grading	12–20–400–002	

REVISION DATE September 3, 2013 / December 26, 2012
REVISION Job Number — Revised Parcel 0002 & 0002T.E.–A, Added Parcel 0001T.E.
MADE BY

PLAT OF HIGHWAYS
STATE OF ILLINOIS
DEPARTMENT OF TRANSPORTATION
F.A.U. 2327 (DEERPATH ROAD)

SECTION 07–00068–00–BR — KANE COUNTY
PROJECT — JOB NO. R–55–001–97
STATION 101+00 — TO STATION 106+00
SCALE: 1"=20' — SHEET 2 OF 6

BUREAU OF LAND ACQUISITION
201 WEST CENTER COURT
SCHAUMBURG, ILLINOIS 60196

PART OF THE SOUTH 1/2 OF SEC. 20, TWP. 39 N., R. 8 E. OF THE 3RD. P.M., IN KANE COUNTY, ILLINOIS.

TOTAL SHEETS	SHEET NO.
78	32

PARCEL NUMBER	OWNER	TOTAL HOLDINGS ACRES	PART TAKEN ACRES	AREA IN EXISTING R.O.W. ACRES	REMAINDER AREA ACRES	EASEMENT AREA ACRES	EASEMENT PURPOSE	PERMANENT INDEX NUMBER	PROPERTY ACQUIRED BY
0001 0001T.E.	Tangelwood Hills Homeowners Association, an Illinois not-for-profit corporation	10.563	0.021	N/A	10.542	0.248	Grading	12-20-326-002	
0003 0003T.E.	Holy Cross Catholic Church of Batavia, a religious corporation	13.318	0.278	N/A	13.040	0.098	Construction Purposes	12-20-401-032	

EXISTING R.O.W. RECORDED INFORMATION		
Parcel	Document No.	Date Recorded
0001	1164641	May 22, 1970
0003	90K35052	July 6, 1990
----	1163916	May 12, 1970

Schedule of Ties		
Point Number ☐	Tie to point	Tie Distance (feet)
1	T1 T2 T3	61.89 50.98
2	T1 T2 T3	54.45 41.36
3	T1 T2 T3	40.90 58.01 78.36
4	T1 T2 T3	60.55 69.72 47.46
5	T1 T2 T3	52.62 44.28 55.02
6	T1 T2 T3	60.85 50.18 62.26
7	T1 T2 T3	56.64 41.24 21.09
8	T1 T2 T3	

Schedule of Ties		
Point Number ☐	Tie to point	Tie Distance (feet)
9	T1 T2 T3	
10	T1 T2 T3	

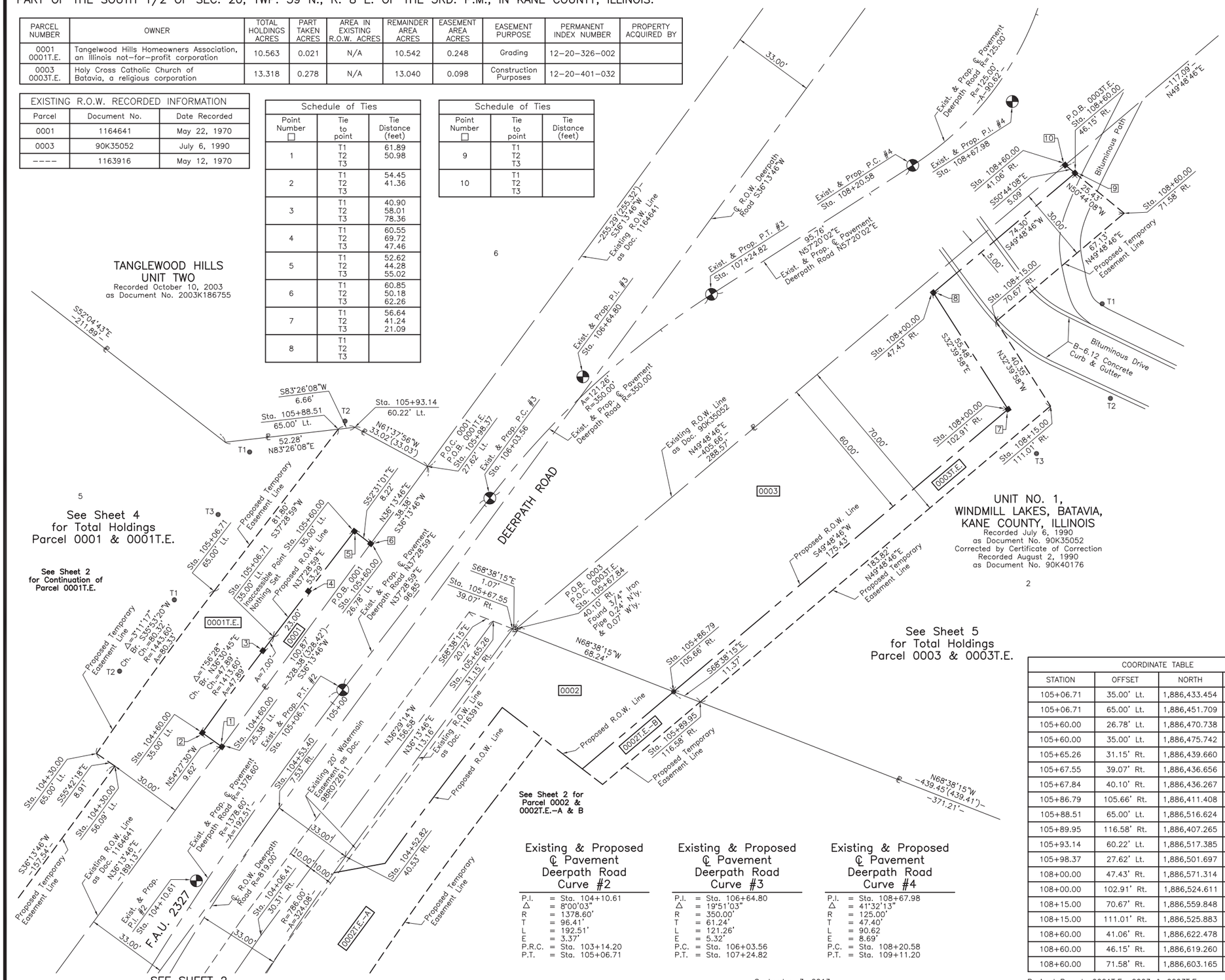

LEGEND

SECTION CORNER (9 10 / 16 15) — QUARTER SECTION CORNER (16 15)

- SECTION LINE
- QUARTER SECTION LINE
- QUARTER, QUARTER SECTION LINE
- PLATTED LOT LINE
- ℄ PROPERTY (DEED) LINE
- APL APPARENT PROPERTY LINE
- CENTER LINE
- EXISTING RIGHT OF WAY LINE
- PROPOSED RIGHT OF WAY LINE
- PROPOSED EASEMENT
- 120.32' MEASURED DIMENSION
- 129.32'(Comp.) COMPUTED DIMENSION
- ( ) RECORD DATA
- EXISTING BUILDING

N — SCALE: 1"=20' (0, 20', 40')

Bearings and Coordinates are referenced to the Illinois Coordinate System NAD 83(2007) East Zone.

- ○ IRON PIPE OR ROD FOUND
- ⊕ "MAG" NAIL SET
- + CUT CROSS FOUND OR SET
- ● 5/8" REBAR SET
- ● T1 T2 T3 ***THESE STAKES REFERENCE FOUND OR SET MONUMENTATION.*** SET 5/8 INCH IRON ROD FLUSH WITH GROUND TO TIE FOUND IRON STAKE. IDENTIFIED BY COLORED PLASTIC CAP BEARING SURVEYORS REGISTRATION NUMBER.
- ● BT1 BT2 BT3 ***THESE STAKES, IN CULTIVATED AREAS, REFERENCE FOUND OR SET MONUMENTATION.*** BURIED 5/8 INCH IRON ROD 20 INCHES BELOW GROUND TO TIE FOUND IRON STAKE. IDENTIFIED BY COLORED PLASTIC CAP BEARING SURVEYORS REGISTRATION NUMBER.
- ■ ***STAKING OF PROPOSED RIGHT OF WAY.*** SET DIVISION OF HIGHWAYS SURVEY MARKER TO MONUMENT THE POSITION SHOWN. IDENTIFIED BY INSCRIPTION DATA AND SURVEYORS REGISTRATION NUMBER.
- ■ M ***STAKING OF PROPOSED RIGHT OF WAY IN CULTIVATED AREAS.*** BURIED 5/8 INCH METAL ROD 20 INCHES BELOW GROUND TO MARK FUTURE SURVEY MARKER POSITION IDENTIFIED BY COLORED PLASTIC CAP BEARING SURVEYORS REGISTRATION NUMBER.
- PERMANENT SURVEY MARKER, I.D.O.T STD 2135 (TO BE SET BY OTHERS)
- ☐ RIGHT OF WAY STAKING PROPOSED TO BE SET.

STATE OF ILLINOIS)
)SS
COUNTY OF LAKE)

THIS IS TO CERTIFY THAT WE, JORGENSEN & ASSOCIATES, INC., AN ILLINOIS PROFESSIONAL DESIGN FIRM LAND SURVEYING CORPORATION, NUMBER 184-2771, HAVE SURVEYED THE PLAT OF HIGHWAYS SHOWN HEREON IN SECTION 20, TOWNSHIP 39N., RANGE 8E., OF THE THIRD PRINCIPAL MERIDIAN, KANE COUNTY, THAT THE SURVEY IS TRUE AND COMPLETE AS SHOWN TO THE BEST OF MY KNOWLEDGE AND BELIEF, THAT THE PLAT CORRECTLY REPRESENTS SAID SURVEY, THAT ALL MONUMENTS FOUND AND ESTABLISHED ARE OF PERMANENT QUALITY AND OCCUPY THE POSITIONS SHOWN THEREON AND THAT THE MONUMENTS ARE SUFFICIENT TO ENABLE THE SURVEY TO BE RETRACED. MADE FOR THE DEPARTMENT OF TRANSPORTATION, STATE OF ILLINOIS.

DATED AT LAKE VILLA, ILLINOIS THIS _____ DAY OF_____20___ A.D.

PRESIDENT

ILLINOIS PROFESSIONAL LAND SURVEYOR NO. 35-2797
LICENSE EXPIRATION DATE: NOVEMBER 30, 2014

THIS PROFESSIONAL SERVICE CONFORMS TO THE CURRENT ILLINOIS MINIMUM STANDARDS FOR A BOUNDARY SURVEY.
Note: Surface Coordinates are Shown.

COORDINATE TABLE			
STATION	OFFSET	NORTH	EAST
104+06.41	30.31' Rt.	1,886,313.772	979,921.311
104+30.00	56.09' Lt.	1,886,381.622	979,862.768
104+30.00	65.00' Lt.	1,886,386.642	979,855.408
104+52.82	40.53' Rt.	1,886,345.379	979,955.223
104+53.40	7.53' Rt.	1,886,364.883	979,928.604
104+60.00	25.38' Lt.	1,886,389.367	979,905.633
104+60.00	35.00' Lt.	1,886,394.962	979,897.801

COORDINATE TABLE			
STATION	OFFSET	NORTH	EAST
105+06.71	35.00' Lt.	1,886,433.454	979,926.296
105+06.71	65.00' Lt.	1,886,451.709	979,902.490
105+60.00	26.78' Lt.	1,886,470.738	979,965.252
105+60.00	35.00' Lt.	1,886,475.742	979,958.726
105+65.26	31.15' Rt.	1,886,439.660	980,014.419
105+67.55	39.07' Rt.	1,886,436.656	980,022.100
105+67.84	40.10' Rt.	1,886,436.267	980,023.095
105+86.79	105.66' Rt.	1,886,411.408	980,086.648
105+88.51	65.00' Lt.	1,886,516.624	979,952.271
105+89.95	116.58' Rt.	1,886,407.265	980,097.240
105+93.14	60.22' Lt.	1,886,517.385	979,958.882
105+98.37	27.62' Lt.	1,886,501.697	979,987.935
108+00.00	47.43' Rt.	1,886,571.314	980,190.722
108+00.00	102.91' Rt.	1,886,524.611	980,220.666
108+15.00	70.67' Rt.	1,886,559.848	980,215.891
108+15.00	111.01' Rt.	1,886,525.883	980,237.668
108+60.00	41.06' Rt.	1,886,622.478	980,243.546
108+60.00	46.15' Rt.	1,886,619.260	980,247.484
108+60.00	71.58' Rt.	1,886,603.165	980,267.173

Existing & Proposed ℄ Pavement Deerpath Road Curve #2

P.I.	=	Sta. 104+10.61
△	=	8°00'03"
R	=	1378.60'
T	=	96.41'
L	=	192.51'
E	=	3.37'
P.R.C.	=	Sta. 103+14.20
P.T.	=	Sta. 105+06.71

Existing & Proposed ℄ Pavement Deerpath Road Curve #3

P.I.	=	Sta. 106+64.80
△	=	19°51'03"
R	=	350.00'
T	=	61.24'
L	=	121.26'
E	=	5.32'
P.C.	=	Sta. 106+03.56
P.T.	=	Sta. 107+24.82

Existing & Proposed ℄ Pavement Deerpath Road Curve #4

P.I.	=	Sta. 108+67.98
△	=	41°32'13"
R	=	125.00'
T	=	47.40'
L	=	90.62
E	=	8.69'
P.C.	=	Sta. 108+20.58
P.T.	=	Sta. 109+11.20

REVISION DATE September 3, 2013 December 26, 2012 — Revised Parcels 0001T.E., 0003 & 0003T.E.
REVISION Job Number — MADE BY

JORGENSEN & ASSOCIATES, INC.
120 PARK AVENUE
LAKE VILLA, ILLINOIS 60046
(847) 356-3371

SHEET 1 IS A COVER SHEET AND IS NOT RECORDED.

PLAT OF HIGHWAYS
STATE OF ILLINOIS
DEPARTMENT OF TRANSPORTATION

F.A.U. 2327 (DEERPATH ROAD)

SECTION 07-00068-00-BR KANE COUNTY
PROJECT JOB NO. R-55-001-97
STATION 104+00 TO STATION 109+00
SCALE: 1"=20' SHEET 3 OF 6

BUREAU OF LAND ACQUISITION
201 WEST CENTER COURT
SCHAUMBURG, ILLINOIS 60196

PART OF THE EAST 1/2 AND PART OF THE WEST 1/2 OF SEC. 20, TWP. 39 N., R. 8 E. OF THE 3RD. P.M., IN KANE COUNTY, ILLINOIS.

TOTAL SHEETS	SHEET NO.
78	33

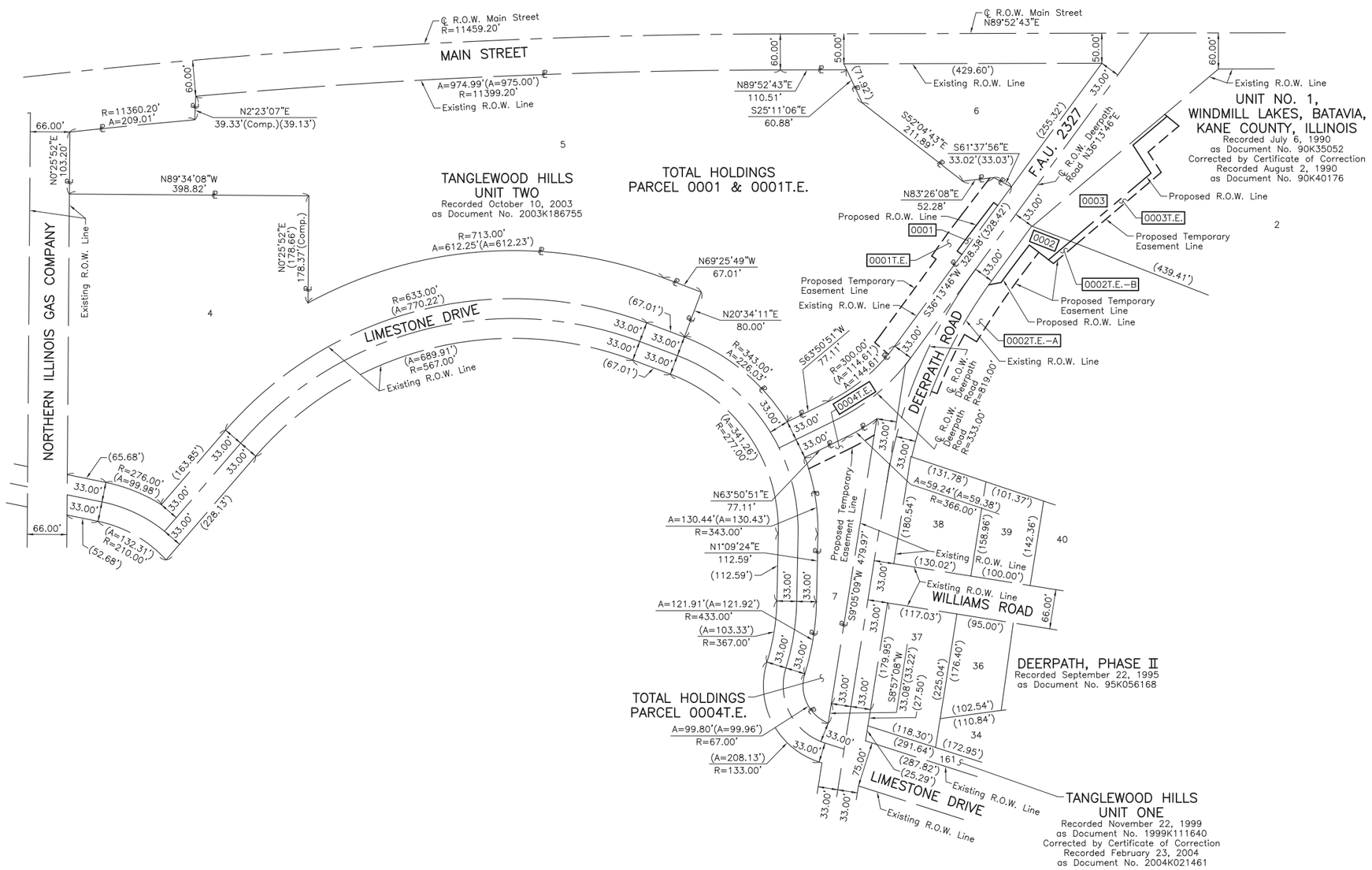

LEGEND

SECTION CORNER (9 10 16 15) — QUARTER SECTION CORNER (16 15)

- SECTION LINE
- QUARTER SECTION LINE
- QUARTER, QUARTER SECTION LINE
- PLATTED LOT LINE
- PROPERTY (DEED) LINE
- APL — APPARENT PROPERTY LINE
- CENTER LINE
- EXISTING RIGHT OF WAY LINE
- PROPOSED RIGHT OF WAY LINE
- PROPOSED EASEMENT
- 120.32' — MEASURED DIMENSION
- 129.32'(Comp.) — COMPUTED DIMENSION
- ( ) — RECORD DATA
- EXISTING BUILDING

N

0 100' 200'

SCALE: 1"=100'

Bearings and Coordinates are referenced to the Illinois Coordinate System NAD 83(2007) East Zone.

○	IRON PIPE OR ROD FOUND	⊕	"MAG" NAIL SET
+	CUT CROSS FOUND OR SET	●	5/8" REBAR SET
● T1 T2 T3	***THESE STAKES REFERENCE FOUND OR SET MONUMENTATION.*** SET 5/8 INCH IRON ROD FLUSH WITH GROUND TO TIE FOUND IRON STAKE. IDENTIFIED BY COLORED PLASTIC CAP BEARING SURVEYORS REGISTRATION NUMBER.		
● BT1 BT2 BT3	***THESE STAKES, IN CULTIVATED AREAS, REFERENCE FOUND OR SET MONUMENTATION.*** BURIED 5/8 INCH IRON ROD 20 INCHES BELOW GROUND TO TIE FOUND IRON STAKE. IDENTIFIED BY COLORED PLASTIC CAP BEARING SURVEYORS REGISTRATION NUMBER.		
■	***STAKING OF PROPOSED RIGHT OF WAY.*** SET DIVISION OF HIGHWAYS SURVEY MARKER TO MONUMENT THE POSITION SHOWN. IDENTIFIED BY INSCRIPTION DATA AND SURVEYORS REGISTRATION NUMBER.		
■ M	***STAKING OF PROPOSED RIGHT OF WAY IN CULTIVATED AREAS.*** BURIED 5/8 INCH METAL ROD 20 INCHES BELOW GROUND TO MARK FUTURE SURVEY MARKER POSITION IDENTIFIED BY COLORED PLASTIC CAP BEARING SURVEYORS REGISTRATION NUMBER.		
◐	PERMANENT SURVEY MARKER, I.D.O.T STD 2135 (TO BE SET BY OTHERS)		
□	RIGHT OF WAY STAKING PROPOSED TO BE SET.		

STATE OF ILLINOIS)
)SS
COUNTY OF LAKE)

THIS IS TO CERTIFY THAT WE, JORGENSEN & ASSOCIATES, INC., AN ILLINOIS PROFESSIONAL DESIGN FIRM LAND SURVEYING CORPORATION, NUMBER 184-2771, HAVE SURVEYED THE PLAT OF HIGHWAYS SHOWN HEREON IN SECTION 20, TOWNSHIP 39N., RANGE 8E., OF THE THIRD PRINCIPAL MERIDIAN, KANE COUNTY, THAT THE SURVEY IS TRUE AND COMPLETE AS SHOWN TO THE BEST OF MY KNOWLEDGE AND BELIEF, THAT THE PLAT CORRECTLY REPRESENTS SAID SURVEY, THAT ALL MONUMENTS FOUND AND ESTABLISHED ARE OF PERMANENT QUALITY AND OCCUPY THE POSITIONS SHOWN THEREON AND THAT THE MONUMENTS ARE SUFFICIENT TO ENABLE THE SURVEY TO BE RETRACED. MADE FOR THE DEPARTMENT OF TRANSPORTATION, STATE OF ILLINOIS.

DATED AT LAKE VILLA, ILLINOIS THIS _____ DAY OF_____20___ A.D.

_____ PRESIDENT

ILLINOIS PROFESSIONAL LAND SURVEYOR NO. 35-2797
LICENSE EXPIRATION DATE: NOVEMBER 30, 2014

THIS PROFESSIONAL SERVICE CONFORMS TO THE CURRENT ILLINOIS MINIMUM STANDARDS FOR A BOUNDARY SURVEY.

JORGENSEN & ASSOCIATES, INC.
120 PARK AVENUE
LAKE VILLA, ILLINOIS 60046
(847) 356-3371

SHEET 1 IS A COVER SHEET AND IS NOT RECORDED.

PLAT OF HIGHWAYS
STATE OF ILLINOIS
DEPARTMENT OF TRANSPORTATION

F.A.U. 2327 (DEERPATH ROAD)

SECTION 07-00068-00-BR KANE COUNTY
PROJECT JOB NO. R-55-001-97
STATION NONE TO STATION
SCALE: 1"=100' SHEET 4 OF 6

BUREAU OF LAND ACQUISITION
201 WEST CENTER COURT
SCHAUMBURG, ILLINOIS 60196

September 4, 2013
REVISION DATE December 26, 2012

REVISION Revised Configuration of Parcel 0001T.E., Added Total Holdings Parcel 0004T.E. Job Number

MADE BY

ROUTE F.A.U. 2327 (DEERPATH ROAD) SECTION 07-00068-00-BR COUNTY KANE JOB NO. R-55-001-97

RECORDING: RECORDED ON AS DOCUMENT NO.

PART OF THE EAST 1/2 AND PART OF THE WEST 1/2 OF SEC. 20, TWP. 39 N., R. 8 E. OF THE 3RD. P.M., IN KANE COUNTY, ILLINOIS.

TOTAL SHEETS	SHEET NO.
78	34

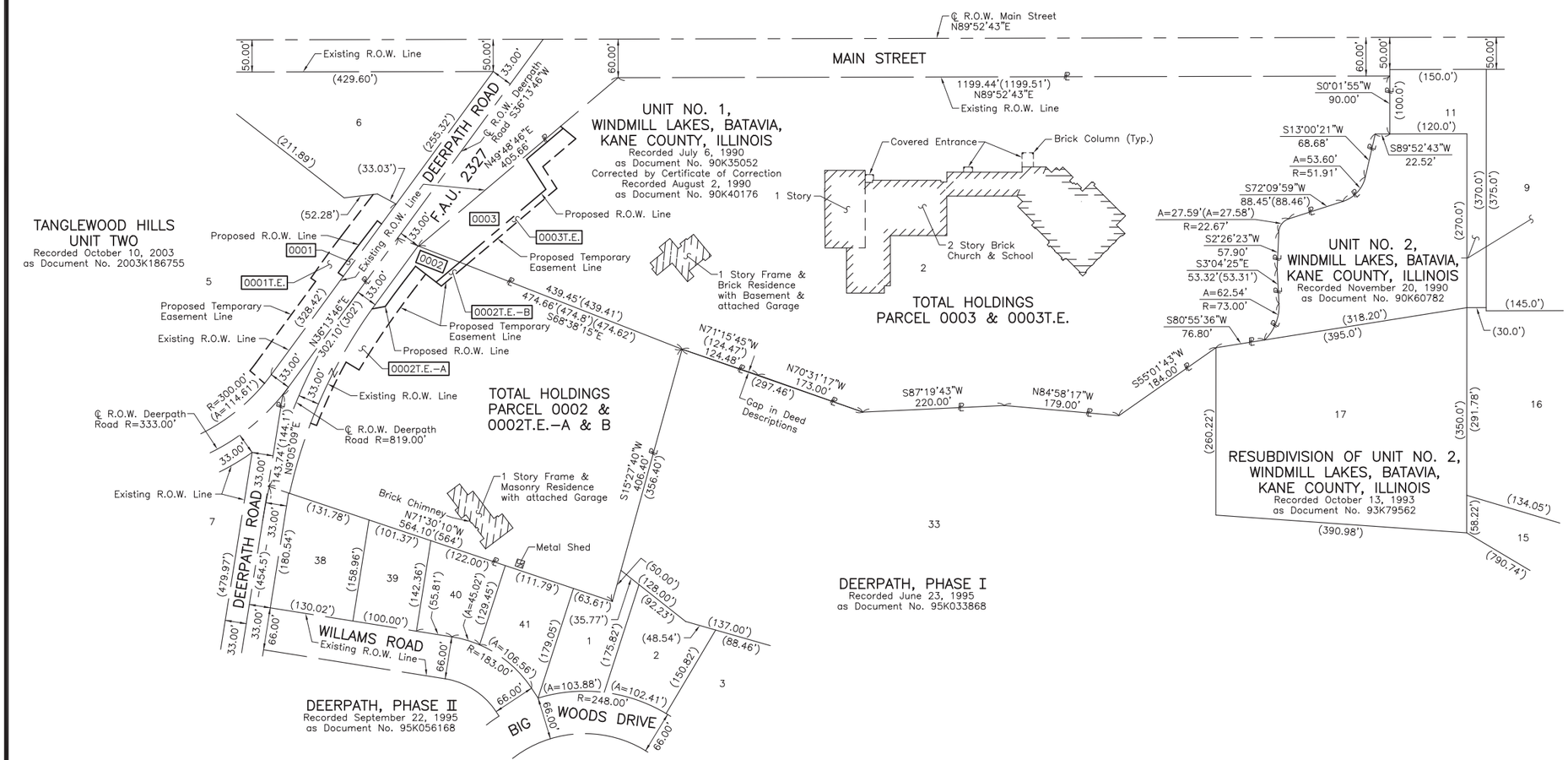

LEGEND

SECTION CORNER (9 10 16 15) — QUARTER SECTION CORNER (16 15)

- SECTION LINE
- QUARTER SECTION LINE
- QUARTER, QUARTER SECTION LINE
- PLATTED LOT LINE
- PROPERTY (DEED) LINE
- APL — APPARENT PROPERTY LINE
- CENTER LINE
- EXISTING RIGHT OF WAY LINE
- PROPOSED RIGHT OF WAY LINE
- PROPOSED EASEMENT
- 120.32' — MEASURED DIMENSION
- 129.32'(Comp.) — COMPUTED DIMENSION
- ( ) — RECORD DATA
- EXISTING BUILDING

N

0 100' 200'

SCALE: 1"=100'

Bearings and Coordinates are referenced to the Illinois Coordinate System NAD 83(2007) East Zone.

- ○ IRON PIPE OR ROD FOUND
- ⊕ "MAG" NAIL SET
- + CUT CROSS FOUND OR SET
- ● 5/8" REBAR SET
- ● T1 T2 T3 ***THESE STAKES REFERENCE FOUND OR SET MONUMENTATION.*** SET 5/8 INCH IRON ROD FLUSH WITH GROUND TO TIE FOUND IRON STAKE. IDENTIFIED BY COLORED PLASTIC CAP BEARING SURVEYORS REGISTRATION NUMBER.
- ● BT1 BT2 BT3 ***THESE STAKES, IN CULTIVATED AREAS, REFERENCE FOUND OR SET MONUMENTATION.*** BURIED 5/8 INCH IRON ROD 20 INCHES BELOW GROUND TO TIE FOUND IRON STAKE. IDENTIFIED BY COLORED PLASTIC CAP BEARING SURVEYORS REGISTRATION NUMBER.
- ■ ***STAKING OF PROPOSED RIGHT OF WAY.*** SET DIVISION OF HIGHWAYS SURVEY MARKER TO MONUMENT THE POSITION SHOWN. IDENTIFIED BY INSCRIPTION DATA AND SURVEYORS REGISTRATION NUMBER.
- ■ M ***STAKING OF PROPOSED RIGHT OF WAY IN CULTIVATED AREAS.*** BURIED 5/8 INCH METAL ROD 20 INCHES BELOW GROUND TO MARK FUTURE SURVEY MARKER POSITION IDENTIFIED BY COLORED PLASTIC CAP BEARING SURVEYORS REGISTRATION NUMBER.
- PERMANENT SURVEY MARKER, I.D.O.T STD 2135 (TO BE SET BY OTHERS)
- □ RIGHT OF WAY STAKING PROPOSED TO BE SET.

STATE OF ILLINOIS)
)SS
COUNTY OF LAKE)

THIS IS TO CERTIFY THAT WE, JORGENSEN & ASSOCIATES, INC., AN ILLINOIS PROFESSIONAL DESIGN FIRM LAND SURVEYING CORPORATION, NUMBER 184–2771, HAVE SURVEYED THE PLAT OF HIGHWAYS SHOWN HEREON IN SECTION 20, TOWNSHIP 39N., RANGE 8E., OF THE THIRD PRINCIPAL MERIDIAN, KANE COUNTY, THAT THE SURVEY IS TRUE AND COMPLETE AS SHOWN TO THE BEST OF MY KNOWLEDGE AND BELIEF, THAT THE PLAT CORRECTLY REPRESENTS SAID SURVEY, THAT ALL MONUMENTS FOUND AND ESTABLISHED ARE OF PERMANENT QUALITY AND OCCUPY THE POSITIONS SHOWN THEREON AND THAT THE MONUMENTS ARE SUFFICIENT TO ENABLE THE SURVEY TO BE RETRACED. MADE FOR THE DEPARTMENT OF TRANSPORTATION, STATE OF ILLINOIS.

DATED AT LAKE VILLA, ILLINOIS THIS _____ DAY OF_____20___A.D.

_____ PRESIDENT

ILLINOIS PROFESSIONAL LAND SURVEYOR NO. 35–2797
LICENSE EXPIRATION DATE: NOVEMBER 30, 2014

THIS PROFESSIONAL SERVICE CONFORMS TO THE CURRENT ILLINOIS MINIMUM STANDARDS FOR A BOUNDARY SURVEY.

JORGENSEN & ASSOCIATES, INC.
120 PARK AVENUE
LAKE VILLA, ILLINOIS 60046
(847) 356–3371

SHEET 1 IS A COVER SHEET AND IS NOT RECORDED.

PLAT OF HIGHWAYS
STATE OF ILLINOIS
DEPARTMENT OF TRANSPORTATION

F.A.U. 2327 (DEERPATH ROAD)

SECTION 07–00068–00–BR KANE COUNTY
PROJECT JOB NO. R–55–001–97
STATION NONE TO STATION
SCALE: 1"=100' SHEET 5 OF 6

BUREAU OF LAND ACQUISITION
201 WEST CENTER COURT
SCHAUMBURG, ILLINOIS 60196

September 3, 2013
REVISION DATE December 26, 2012

Revised Configuration of Parcels 0002, 0002T.E.–A, 0003 & 0003T.E.
REVISION Job Number

MADE BY

ROUTE F.A.U. 2327 (DEERPATH ROAD) SECTION 07–00068–00–BR COUNTY KANE JOB NO. R–55–001–97 RECORDING: RECORDED ON AS DOCUMENT NO.

PART OF THE EAST 1/2 AND PART OF THE WEST 1/2 OF SEC. 20, TWP. 39 N., R. 8 E. OF THE 3RD. P.M., IN KANE COUNTY, ILLINOIS.

TOTAL SHEETS	SHEET NO.
78	35

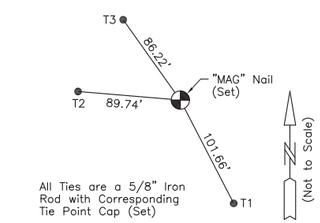

Existing & Proposed P.T. #2
Deerpath Road
Sta. 105+06.71
N.1,886,412.155–E.979,954.070

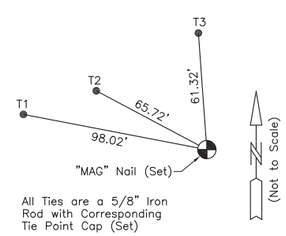

Existing & Proposed P.C. #3
Deerpath Road
Sta. 106+03.56
N.1,886,489.006–E.980,013.004

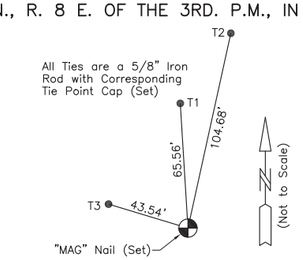

Existing & Proposed P.I. #3
Deerpath Road
Sta. 106+64.80
N.1,886,537.606–E.980,050.273

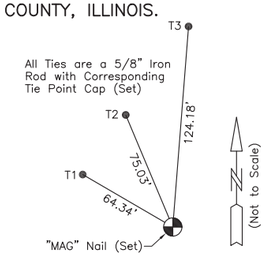

Existing & Proposed P.T. #3
Deerpath Road
Sta. 107+24.82
N.1,886,570.662–E.980,101.830

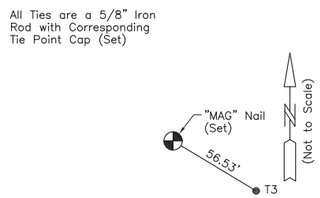

Existing & Proposed P.R.C.
Deerpath Road
Sta. 103+14.20
N.1,886,251.725–E.979,847.953

Existing & Proposed P.I. #2
Deerpath Road
Sta. 104+10.61
N.1,886,335.651–E.979,895.402

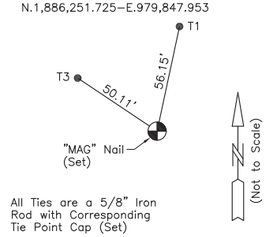

Existing & Proposed P.C. #1
Deerpath Road
Sta. 101+19.27
N.1,886,119.947–E.979,708.286

Existing & Proposed P.I. #1
Deerpath Road
Sta. 102+19.77
N.1,886,164.242–E.979,798.494

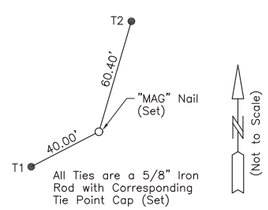

Existing P.O.T.
Deerpath Road
Sta. 100+00.00
N.1,886,067.377–E.979,601.225

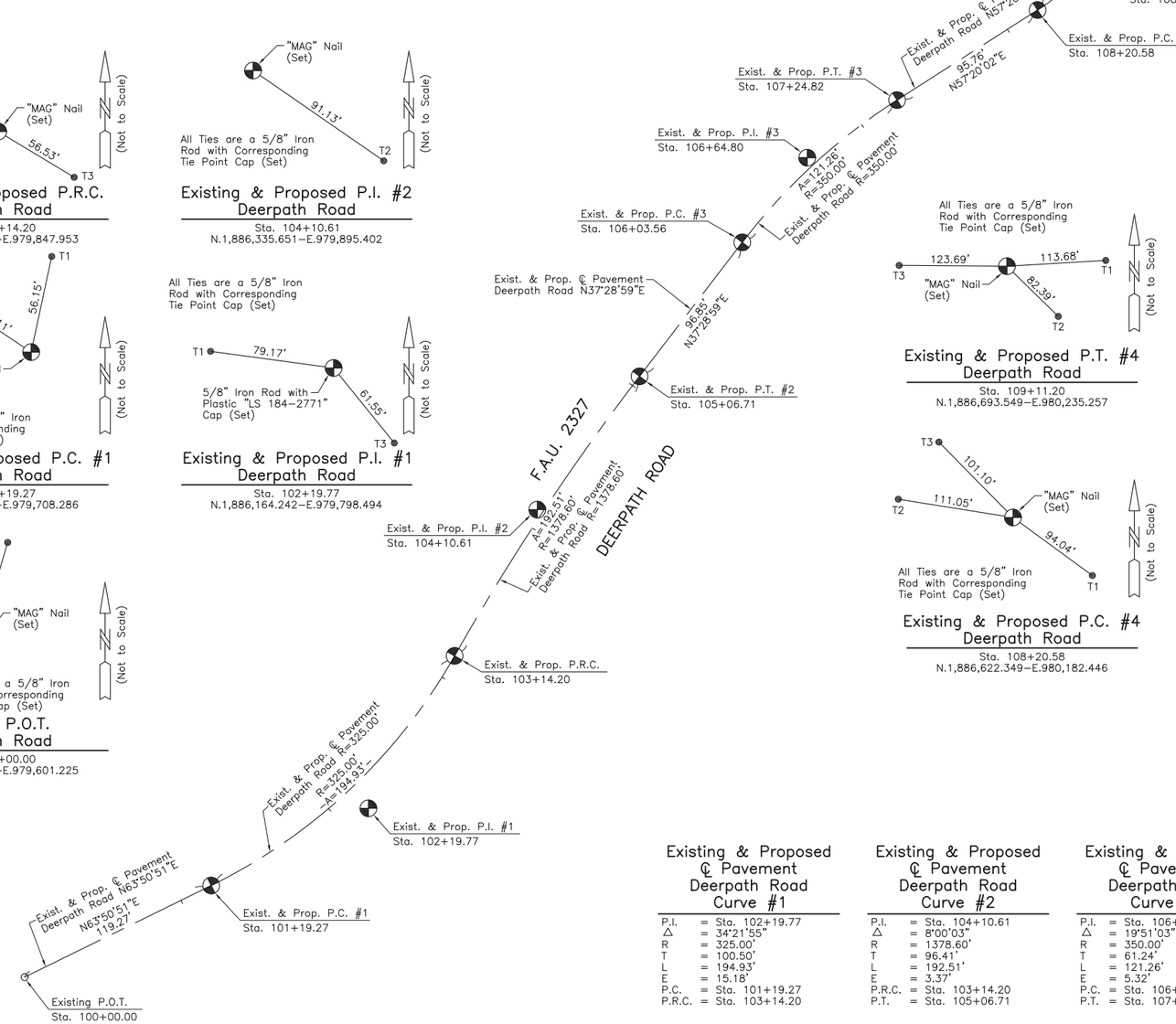

Existing & Proposed P.T. #4
Deerpath Road
Sta. 109+11.20
N.1,886,693.549–E.980,235.257

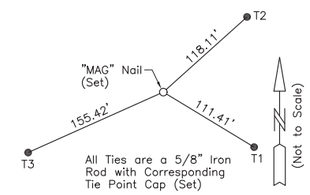

Existing P.O.T.
Deerpath Road
Sta. 109+78.07
N.1,886,757.896–E.980,253.462

Existing & Proposed P.C. #4
Deerpath Road
Sta. 108+20.58
N.1,886,622.349–E.980,182.446

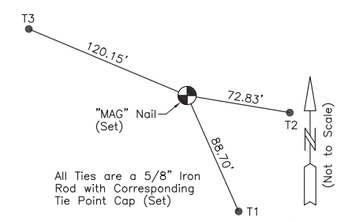

Existing & Proposed P.I. #4
Deerpath Road
Sta. 108+67.98
N.1,886,647.935–E.980,222.353

LEGEND

9 10 / 16 15	SECTION CORNER
16 15	QUARTER SECTION CORNER
	SECTION LINE
	QUARTER SECTION LINE
	QUARTER, QUARTER SECTION LINE
	PLATTED LOT LINE
℄	PROPERTY (DEED) LINE
APL	APPARENT PROPERTY LINE
	CENTER LINE
	EXISTING RIGHT OF WAY LINE
	PROPOSED RIGHT OF WAY LINE
	PROPOSED EASEMENT
120.32'	MEASURED DIMENSION
129.32'(Comp.)	COMPUTED DIMENSION
( )	RECORD DATA
	EXISTING BUILDING

N

0 40' 80'
SCALE: 1"=40'

Bearings and Coordinates are referenced to the Illinois Coordinate System NAD 83(2007) East Zone.

○	IRON PIPE OR ROD FOUND	⊕	"MAG" NAIL SET
+	CUT CROSS FOUND OR SET	●	5/8" REBAR SET

● T1, T2, T3 — ***THESE STAKES REFERENCE FOUND OR SET MONUMENTATION.*** SET 5/8 INCH IRON ROD FLUSH WITH GROUND TO TIE FOUND IRON STAKE. IDENTIFIED BY COLORED PLASTIC CAP BEARING SURVEYORS REGISTRATION NUMBER.

● BT1, BT2, BT3 — ***THESE STAKES, IN CULTIVATED AREAS, REFERENCE FOUND OR SET MONUMENTATION.*** BURIED 5/8 INCH IRON ROD 20 INCHES BELOW GROUND TO TIE FOUND IRON STAKE. IDENTIFIED BY COLORED PLASTIC CAP BEARING SURVEYORS REGISTRATION NUMBER.

■ — ***STAKING OF PROPOSED RIGHT OF WAY.*** SET DIVISION OF HIGHWAYS SURVEY MARKER TO MONUMENT THE POSITION SHOWN. IDENTIFIED BY INSCRIPTION DATA AND SURVEYORS REGISTRATION NUMBER.

■ M — ***STAKING OF PROPOSED RIGHT OF WAY IN CULTIVATED AREAS.*** BURIED 5/8 INCH METAL ROD 20 INCHES BELOW GROUND TO MARK FUTURE SURVEY MARKER POSITION IDENTIFIED BY COLORED PLASTIC CAP BEARING SURVEYORS REGISTRATION NUMBER.

◐ — PERMANENT SURVEY MARKER, I.D.O.T STD 2135 (TO BE SET BY OTHERS)

□ — RIGHT OF WAY STAKING PROPOSED TO BE SET.

STATE OF ILLINOIS)
)SS
COUNTY OF LAKE)

THIS IS TO CERTIFY THAT WE, JORGENSEN & ASSOCIATES, INC., AN ILLINOIS PROFESSIONAL DESIGN FIRM LAND SURVEYING CORPORATION, NUMBER 184–2771, HAVE SURVEYED THE PLAT OF HIGHWAYS SHOWN HEREON IN SECTION 20, TOWNSHIP 39N., RANGE 8E., OF THE THIRD PRINCIPAL MERIDIAN, KANE COUNTY, THAT THE SURVEY IS TRUE AND COMPLETE AS SHOWN TO THE BEST OF MY KNOWLEDGE AND BELIEF, THAT THE PLAT CORRECTLY REPRESENTS SAID SURVEY, THAT ALL MONUMENTS FOUND AND ESTABLISHED ARE OF PERMANENT QUALITY AND OCCUPY THE POSITIONS SHOWN THEREON AND THAT THE MONUMENTS ARE SUFFICIENT TO ENABLE THE SURVEY TO BE RETRACED. MADE FOR THE DEPARTMENT OF TRANSPORTATION, STATE OF ILLINOIS.

DATED AT LAKE VILLA, ILLINOIS THIS _____ DAY OF_____20___ A.D.

_____ PRESIDENT
ILLINOIS PROFESSIONAL LAND SURVEYOR NO. 35–2797
LICENSE EXPIRATION DATE: NOVEMBER 30, 2014

THIS PROFESSIONAL SERVICE CONFORMS TO THE CURRENT ILLINOIS MINIMUM STANDARDS FOR A BOUNDARY SURVEY.
Note: Surface Coordinates are Shown.

Existing & Proposed ℄ Pavement Deerpath Road Curve #1

P.I.	=	Sta. 102+19.77
△	=	34°21'55"
R	=	325.00'
T	=	100.50'
L	=	194.93'
E	=	15.18'
P.C.	=	Sta. 101+19.27
P.R.C.	=	Sta. 103+14.20

Existing & Proposed ℄ Pavement Deerpath Road Curve #2

P.I.	=	Sta. 104+10.61
△	=	8°00'03"
R	=	1378.60'
T	=	96.41'
L	=	192.51'
E	=	3.37'
P.R.C.	=	Sta. 103+14.20
P.T.	=	Sta. 105+06.71

Existing & Proposed ℄ Pavement Deerpath Road Curve #3

P.I.	=	Sta. 106+64.80
△	=	19°51'03"
R	=	350.00'
T	=	61.24'
L	=	121.26'
E	=	5.32'
P.C.	=	Sta. 106+03.56
P.T.	=	Sta. 107+24.82

Existing & Proposed ℄ Pavement Deerpath Road Curve #4

P.I.	=	Sta. 108+67.98
△	=	41°32'13"
R	=	125.00'
T	=	47.40'
L	=	90.62
E	=	8.69'
P.C.	=	Sta. 108+20.58
P.T.	=	Sta. 109+11.20

JORGENSEN & ASSOCIATES, INC.
120 PARK AVENUE
LAKE VILLA, ILLINOIS 60046
(847) 356–3371

SHEET 1 IS A COVER SHEET AND IS NOT RECORDED.

PLAT OF HIGHWAYS
STATE OF ILLINOIS
DEPARTMENT OF TRANSPORTATION

F.A.U. 2327 (DEERPATH ROAD)
SECTION 07–00068–00–BR KANE COUNTY
PROJECT JOB NO. R–55–001–97
STATION 100+00.00 TO STATION 109+78.07
SCALE: 1"=40' SHEET 6 OF 6

BUREAU OF LAND ACQUISITION
201 WEST CENTER COURT
SCHAUMBURG, ILLINOIS 60196

REVISION DATE December 26, 2012 REVISION Job Number MADE BY

ROUTE F.A.U. 2327 (DEERPATH ROAD) SECTION 07–00068–00–BR COUNTY KANE JOB NO. R–55–001–97 RECORDING: RECORDED ON AS DOCUMENT NO.

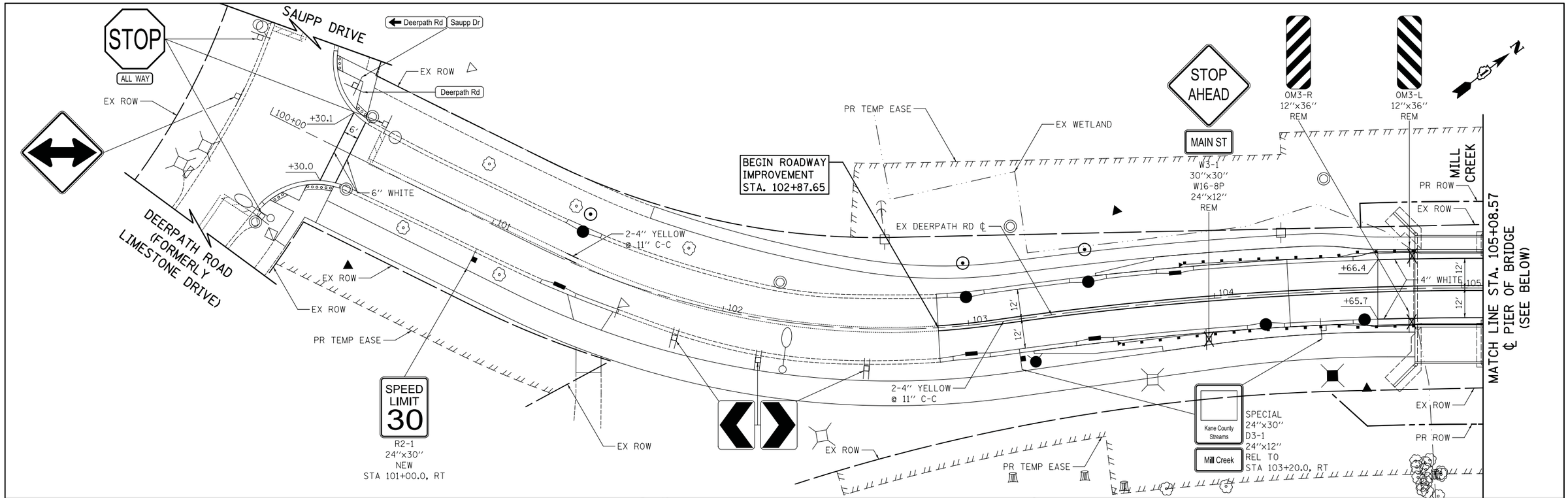

LEGEND

NEW	SIGN PANEL, TYPE 1 OR 2 AND TELESCOPING STEEL SIGN SUPPORT
REL	RELOCATE SIGN PANEL ASSEMBLY, TYPE A OR B AND NEW TELESCOPING STEEL SIGN SUPPORT
REM	REMOVE SIGN PANEL ASSEMBLY, TYPE A OR B
	EXISTING SIGN
	PROPOSED SIGN

NOTES

1. ALL SIGNS ARE EXISTING TO REMAIN UNLESS OTHERWISE NOTED.
2. ALL PERMANENT PAVEMENT MARKINGS SHALL BE THERMOPLASTIC ON HMA SURFACE AND PREFORMED THERMOPLASTIC ON PCC SURFACE UNLESS OTHERWISE NOTED.
3. ALL PROPOSED SIGN FACES SHALL BE TYPE AZ (DIAMOND GRADE) REFLECTORIZED SHEETING. THIS WORK SHALL BE PAID FOR AS "SIGN PANEL" OF THE TYPE SPECIFIED.
4. DIMENSIONS TO PAVEMENT MARKINGS ARE TO THE CENTER OF A SINGLE LINE OR THE CENTER OF GAP FOR A DOUBLE LINE.

DEERPATH ROAD

PLOT DRIVER = ...\mjp\dms@0314\ceu_pdf.plt
PEN TABLE = ...\pentbl\ceu_idot_general.tbl
FILE NAME = ...\2637-sht-pmk01.dgn

CIVILTECH

USER NAME = mjp	DESIGNED - MJP	REVISED -
	DRAWN - MJP	REVISED -
PLOT SCALE = 20.0000 ' / in.	CHECKED - DNM	REVISED -
PLOT DATE = 10/10/2015	DATE - 10/12/15	REVISED -

STATE OF ILLINOIS
DEPARTMENT OF TRANSPORTATION

DEERPATH ROAD OVER MILL CREEK
PAVEMENT MARKING AND SIGNING PLAN

SCALE: 1" = 20' | SHEET OF SHEETS | STA. TO STA.

F.A.U. RTE.	SECTION	COUNTY	TOTAL SHEETS	SHEET NO.
2327	07-00068-00-BR	KANE	78	36

CONTRACT NO. 61A88

ILLINOIS FED. AID PROJECT

LEGEND

- SEEDING, CLASS 2
  TOPSOIL FURNISH AND PLACE, 6"
- SEEDING, CLASS 4B (MODIFIED)
  SEEDING, CLASS 5 (SPECIAL)
  TOPSOIL FURNISH AND PLACE, 6"
- SEEDING, CLASS 4 (MODIFIED)
  SEEDING, CLASS 5 (MODIFIED)
  TOPSOIL FURNISH AND PLACE, 6"
- SODDING, SALT TOLERANT
  TOPSOIL FURNISH AND PLACE, 6"
- # (+) PROPOSED TREE (SEE TREE SCHEDULE)

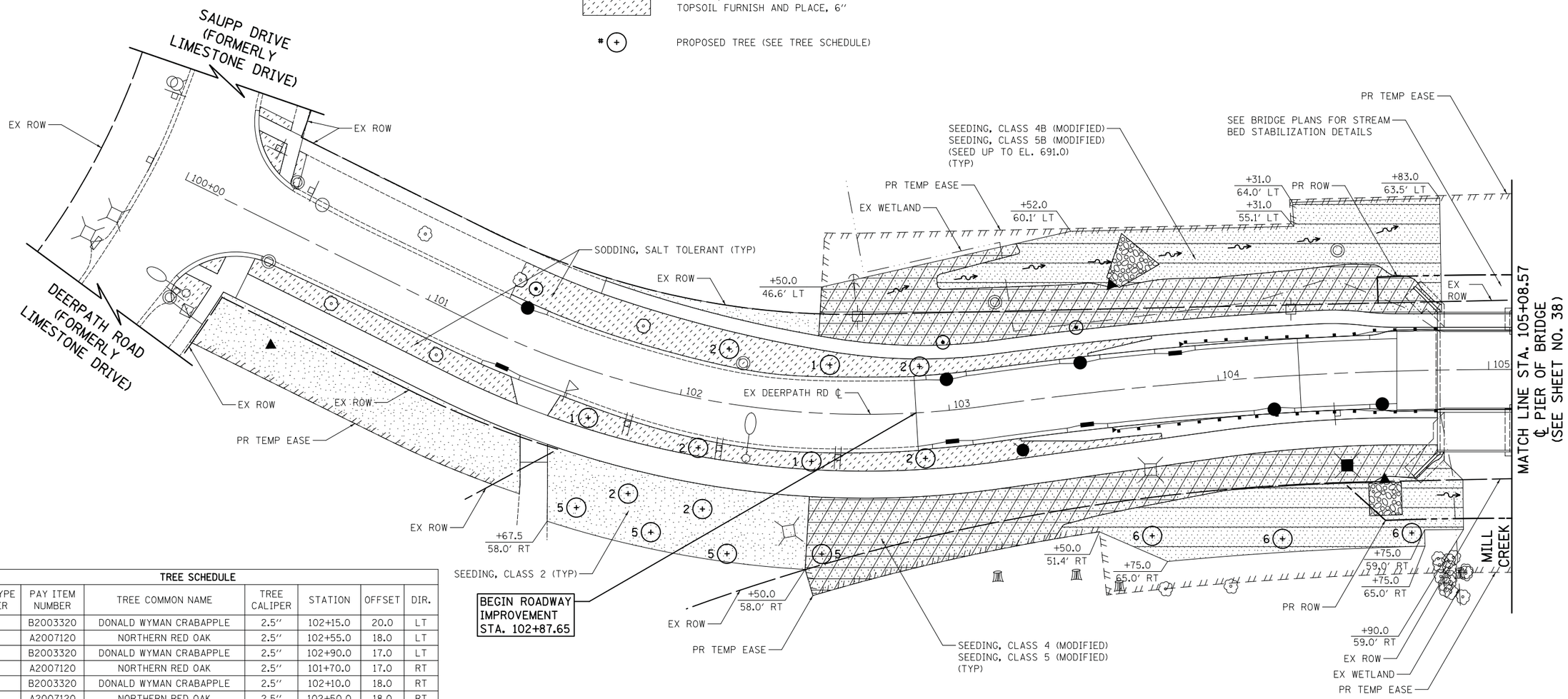

TREE SCHEDULE						
TREE TYPE NUMBER	PAY ITEM NUMBER	TREE COMMON NAME	TREE CALIPER	STATION	OFFSET	DIR.
2	B2003320	DONALD WYMAN CRABAPPLE	2.5"	102+15.0	20.0	LT
1	A2007120	NORTHERN RED OAK	2.5"	102+55.0	18.0	LT
2	B2003320	DONALD WYMAN CRABAPPLE	2.5"	102+90.0	17.0	LT
1	A2007120	NORTHERN RED OAK	2.5"	101+70.0	17.0	RT
2	B2003320	DONALD WYMAN CRABAPPLE	2.5"	102+10.0	18.0	RT
1	A2007120	NORTHERN RED OAK	2.5"	102+50.0	18.0	RT
2	B2003320	DONALD WYMAN CRABAPPLE	2.5"	102+90.0	17.0	RT
5	A2005020	KENTUCKY COFFEETREE	2.5"	101+75.0	50.0	RT
2	B2003320	DONALD WYMAN CRABAPPLE	2.5"	101+90.0	40.0	RT
5	A2005020	KENTUCKY COFFEETREE	2.5"	102+00.0	52.0	RT
2	B2003320	DONALD WYMAN CRABAPPLE	2.5"	102+15.0	40.0	RT
5	A2005020	KENTUCKY COFFEETREE	2.5"	102+25.0	55.0	RT
5	A2005020	KENTUCKY COFFEETREE	2.5"	102+55.0	52.0	RT
6	A2006820	CHINKAPIN OAK	2.5"	103+70.0	55.0	RT
6	A2006820	CHINKAPIN OAK	2.5"	104+20.0	60.0	RT
6	A2006820	CHINKAPIN OAK	2.5"	104+70.0	60.0	RT

PLOT DRIVER = ...\mjp\dms@0314\ceu_pdf.plt
PEN TABLE = ...\pentbl\ceu_idot_general.tbl
FILE NAME = ...\2637-sht-lndsp01.dgn

CIVILTECH

USER NAME = mjp	DESIGNED - MJP	REVISED -	
	DRAWN - MJP	REVISED -	
PLOT SCALE = 20.0000 ' / in.	CHECKED - DNM	REVISED -	
PLOT DATE = 10/10/2015	DATE - 10/12/15	REVISED -	

STATE OF ILLINOIS
DEPARTMENT OF TRANSPORTATION

DEERPATH ROAD OVER MILL CREEK
LANDSCAPING PLAN

SCALE: 1" = 20' | SHEET OF SHEETS | STA. 102+87.65 TO STA. 105+08.57

F.A.U. RTE.	SECTION	COUNTY	TOTAL SHEETS	SHEET NO.
2327	07-00068-00-BR	KANE	78	37

CONTRACT NO. 61A88

ILLINOIS FED. AID PROJECT

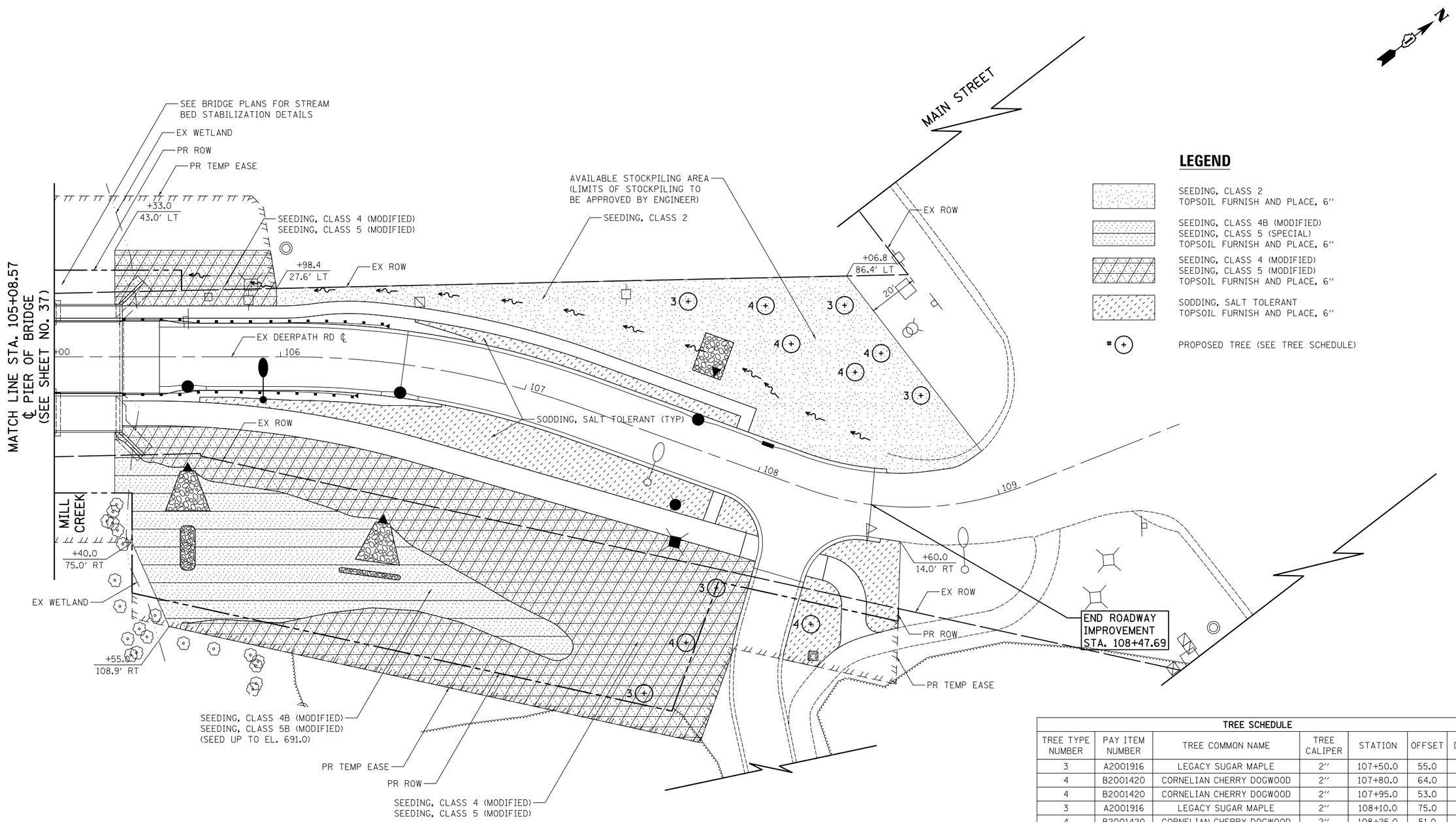

TREE SCHEDULE

TREE TYPE NUMBER	PAY ITEM NUMBER	TREE COMMON NAME	TREE CALIPER	STATION	OFFSET	DIR.
3	A2001916	LEGACY SUGAR MAPLE	2"	107+50.0	55.0	LT
4	B2001420	CORNELIAN CHERRY DOGWOOD	2"	107+80.0	64.0	LT
4	B2001420	CORNELIAN CHERRY DOGWOOD	2"	107+95.0	53.0	LT
3	A2001916	LEGACY SUGAR MAPLE	2"	108+10.0	75.0	LT
4	B2001420	CORNELIAN CHERRY DOGWOOD	2"	108+25.0	51.0	LT
4	B2001420	CORNELIAN CHERRY DOGWOOD	2"	108+40.0	61.0	LT
3	A2001916	LEGACY SUGAR MAPLE	2"	108+70.0	45.0	LT
3	A2001916	LEGACY SUGAR MAPLE	2"	108+00.0	50.0	RT
4	B2001420	CORNELIAN CHERRY DOGWOOD	2"	107+96.0	75.0	RT
3	A2001916	LEGACY SUGAR MAPLE	2"	107+87.0	100.0	RT
4	B2001420	CORNELIAN CHERRY DOGWOOD	2"	108+35.0	52.0	RT

PLOT DRIVER = ...\mjp\dms@0314\ceu_pdf.plt
PEN TABLE = ...\pentbl\ceu_idot_general.tbl
FILE NAME = ...\2637-sht-lndscp02.dgn

CIVILTECH

USER NAME = mjp	DESIGNED - MJP	REVISED -	
	DRAWN - MJP	REVISED -	
PLOT SCALE = 20.0000 ' / in.	CHECKED - DNM	REVISED -	
PLOT DATE = 10/10/2015	DATE - 10/12/15	REVISED -	

STATE OF ILLINOIS
DEPARTMENT OF TRANSPORTATION

DEERPATH ROAD OVER MILL CREEK
LANDSCAPING PLAN

SCALE: 1" = 20' | SHEET OF SHEETS | STA. 105+08.57 TO STA.108+47.69

F.A.U. RTE.	SECTION	COUNTY	TOTAL SHEETS	SHEET NO.
2327	07-00068-00-BR	KANE	78	38

CONTRACT NO. 61A88

ILLINOIS FED. AID PROJECT

Bench Mark: Box cut in Southwest Corner of Bridge Curb, Sta. 104+81.76, Offset 12.54' Lt. Elev. 695.26

Existing Structure: Structure No. 045-3095 was built in 1971 for Deerpath Road over Mill Creek. Superstructure consists of 14" reinforced cast-in-place slab with an overlay supported by spread footing abutments and pier on rock. Length is 55'-0" Bk. to Bk. Abutments with an overall width of 26'-0" out to out. Traffic on Deerpath Road will be detoured for construction.

Salvage: None.

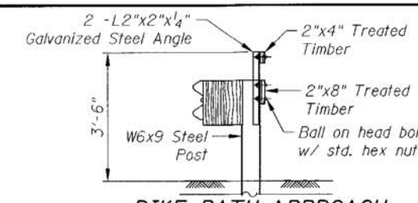

BIKE PATH APPROACH GUARDRAIL ADJUSTMENT

WATERWAY INFORMATION

Drainage Area = 28.78 Sq. mile Low Grade Elev. 694.37 @ Sta. - 104+01

Flood	Freq. Yr.	Q C.F.S.	Opening Sq. Ft. Exist.	Opening Sq. Ft. Prop.	Nat. H.W.E.	Head - Ft. Exist.	Head - Ft. Prop.	Headwater El. Exist.	Headwater El. Prop.
	10	1626.0	283.1	380.1	693.10	0.83	0.37	693.93	693.47
Design	30	2161.0	300.3	416.0	693.95	0.94	0.41	694.89	694.36
	50	2695.0	300.3	418.9	694.39	1.15	0.68	695.54	695.07
Base	100	3300.0	300.3	418.9	694.96	1.13	0.78	696.09	695.74
Overtopping									
Max. Calc.	500	4824.0	300.3	418.9	696.15	0.93	0.81	697.08	696.96

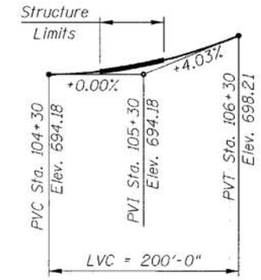

PROFILE GRADE

(Along ℄ Deerpath Rd.)

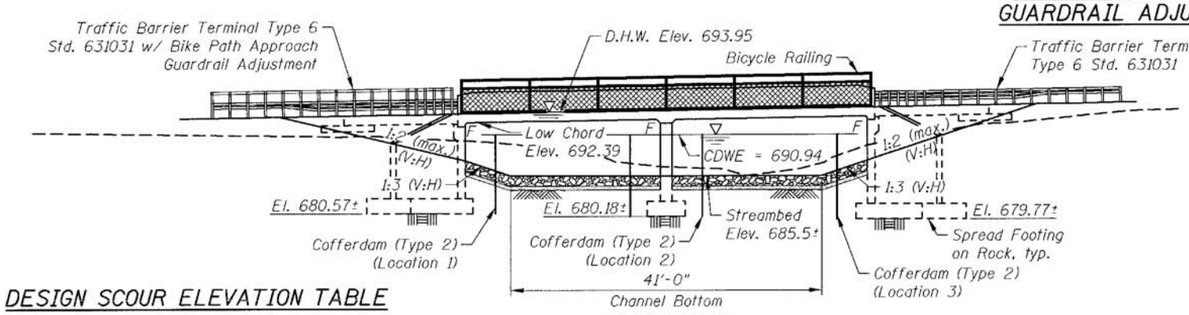

ELEVATION

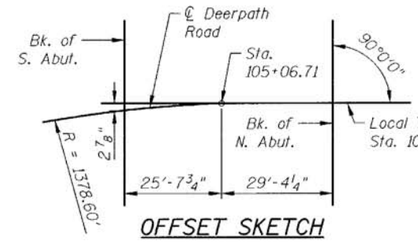

OFFSET SKETCH

CURVE DATA

Δ = 8° 00' 03" (RT)
D = 4° 09' 22"
T = 96.41'
L = 192.51'
E = 3.37'
R = 1,378.60'
S.E. = 3.0%
P.C. = Sta. 103+14.20
P.T. = Sta. 105+06.71
P.I. = Sta. 104+10.61

SEISMIC DATA

Seismic Performance Zone (SPZ) = 1
Design Spectral Acceleration at 1.0 sec. (S_{D1}) = 0.037
Design Spectral Acceleration at 0.2 sec. (S_{DS}) = 0.100
Soil Site Class = B

DESIGN SCOUR ELEVATION TABLE

Design Scour Elevation (ft.)	S. Abut.	Pier	N. Abut.
	680.57	682.06	679.77

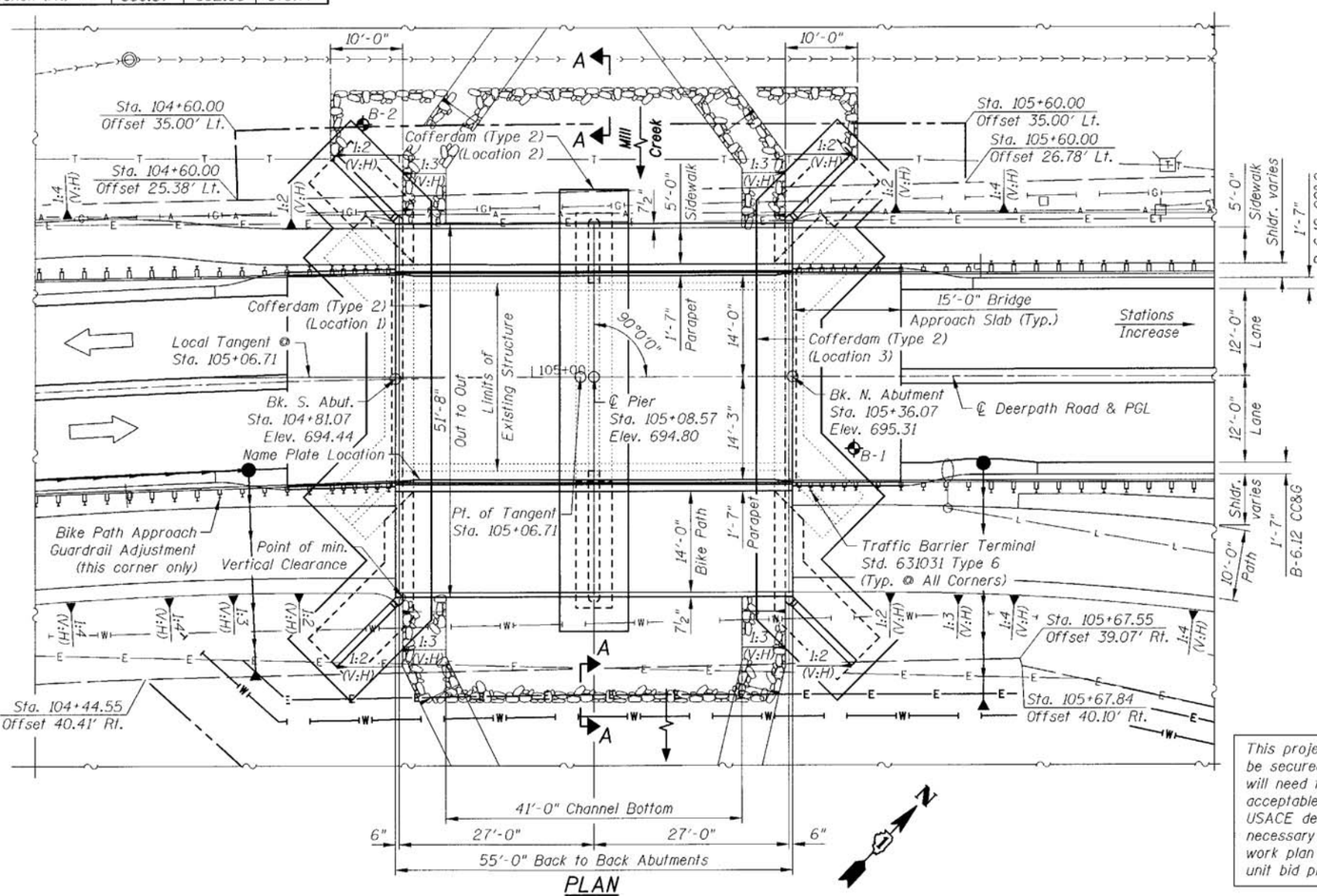

PLAN

CIVILTECH ENGINEERING, INC.
GREGORY J. HATLESTAD, S.E.

STATE OF ILLINOIS — GREGORY J. HATLESTAD 081-005562 — CHICAGO, IL — LICENSED STRUCTURAL ENGINEER

GREGORY J. HATLESTAD, S.E.
081-005562

EXP 11/30/16

DATE 10/09/15

I certify that to the best of knowledge, information, and belief, this bridge design is structurally adequate for the design loading shown on the plans. The design is an economical one for the style of structure and complies with requirements of the current AASHTO LRFD Bridge Design Specifications for Highway Bridges.

STATION 105+08.57
RE-BUILT 201_ BY
CITY OF BATAVIA
F.A.U. RTE. 2327
SEC. 07-00068-00-BR
LOADING HL-93
STRUCTURE NO. 045-3095

NAME PLATE

See Std. 515001

Existing Name Plate shall be cleaned and relocated next to new Name Plate. Cost included with Name plates.

DESIGN SPECIFICATIONS

2012 AASHTO LRFD Bridge Design Specifications, 6th ed.

DESIGN STRESSES

FIELD UNITS (New Construction)

f'c = 3,500 psi
fy = 60,000 psi (Reinforcement)

FIELD UNITS (Existing)

f'c = 3,500 psi (Superstructure)
f'c = 2,500 psi (Substructure)
fy = 40,000 psi (Reinforcement)

LOADING HL-93

Allow 50#/sq. ft. for future wearing surface.

LEGEND

- Existing Gasline
- Existing Underground Electric
- Existing ROW
- Existing Sanitary Sewer
- Existing Water
- Existing Aerial Lines
- Existing Buried Lighting Cable
- Proposed Storm Sewer
- Proposed Underground Electric
- Proposed Water
- Proposed ROW

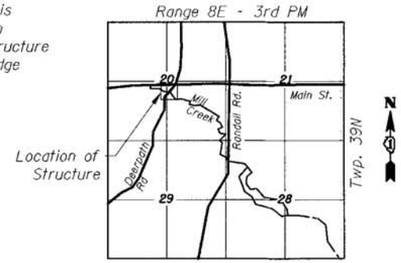

LOCATION SKETCH

This project requires a US Army Corps of Engineers (USACE) 404 Permit that will be secured by the City of Batavia. As a condition of this permit, the Contractor will need to submit an in-stream work plan to the City for approval. Guidelines on acceptable in-stream work techniques can be found on the USACE website. The USACE defines and determines in-stream work. The cost of all materials and labor necessary to comply with the above provisions to prepare and implement an in-stream work plan will not be paid for separately, but shall be considered as included in the unit bid prices of the Contract and no additional compensation will be allowed.

GENERAL PLAN & ELEVATION
F.A.U. 2327 DEERPATH ROAD
OVER MILL CREEK
SECTION 07-00068-00-BR
KANE COUNTY
STATION 105+08.57
STRUCTURE NO. 045-3095

CIVILTECH
450 E Devon Ave, Suite 300
Itasca, Illinois 60143
Tel: 630.773.3900 Fax: 630.773.3975
www.civiltechinc.com

DRAWN	K. KOMPARE	REVISED	-
DESIGNED	M. LANGE	REVISED	-
CHECKED	G. HATLESTAD	REVISED	-
DATE	10/12/15	REVISED	-

STATE OF ILLINOIS
DEPARTMENT OF TRANSPORTATION

GENERAL PLAN & ELEVATION
DEERPATH ROAD OVER MILL CREEK
STRUCTURE NO. 045-3095

SHEET NO. S1 OF S15 SHEETS

F.A.U. RTE.	SECTION	COUNTY	TOTAL SHEETS	SHEET NO.
2327	07-00068-00-BR	KANE	78	39

CONTRACT NO. 61A88

ILLINOIS FED. AID PROJECT

mjp 09/9/2015 1:29:40 PM G:\bw_working\civiltech_production\n\pjt\dms02554\01_General Plan and Elevation_r1.dgn

GENERAL NOTES

1. Reinforcement bars designated (E) shall be epoxy coated.
2. Plan dimensions and details relative to existing plans are subject to nominal construction variations. The Contractor shall field verify existing dimensions and details affecting new construction and make necessary approved adjustments prior to construction or ordering of materials. Such variations shall not be cause for additional compensation for a change in scope of the work; however, the Contractor will be paid for the quantity actually furnished at the unit price bid for the work.
3. Slipforming of the parapets is not allowed.
4. Layout of the slope protection system may be varied to suit ground conditions in the field as directed by the Engineer.
5. The Contractor shall make allowance for the deflection of forms, shrinkage, and settlement of falsework, in addition to allowance for dead load deflection. Forms for the deck slab shall be removed prior to placement of bridge approach slab.
6. Excavation behind existing abutment walls shall be performed to balance front and back soil pressure before removing the existing superstructure.

INDEX OF SHEETS

S1 General Plan & Elevation
S2 General Data
S3 Concrete Removal Details
S4 Top of Slab Elevations
S5 Top of Approach Slab Elevations
S6 Slab Plan and Cross Section
S7 Superstructure Details
S8 Bicycle Railing Details
S9 Bridge Approach Slab
S10 Bridge Approach Slab Details
S11 North Abutment
S12 South Abutment
S13 Abutment Details
S14 Pier
S15 Boring Logs

TOTAL BILL OF MATERIAL

ITEM	UNIT	SUPER	SUB	TOTAL
Channel Excavation	Cu. Yd.	-	428	428
Porous Granular Backfill	Cu. Yd.	-	101	101
Stone Riprap, Class A4	Sq. Yd.	-	531	531
Filter Fabric	Sq. Yd.	-	531	531
Removal of Existing Superstructures	Each	1	-	1
Concrete Removal	Cu. Yd.	-	21.6	21.6
Cofferdam Excavation	Cu. Yd.	-	922	922
Rock Excavation for Structures	Cu. Yd.	-	7	7
Cofferdam (Type 2) (Location 1)	Each	-	1	1
Cofferdam (Type 2) (Location 2)	Each	-	1	1
Cofferdam (Type 2) (Location 3)	Each	-	1	1
Concrete Structures	Cu. Yd.	-	126.3	126.3
Concrete Superstructure	Cu. Yd.	194.4	-	194.4
Bridge Deck Grooving	Sq. Yd.	394	-	394
Protective Coat	Sq. Yd.	481	-	481
Reinforcement Bars, Epoxy Coated	Pound	34,820	14,840	49,660
Bicycle Railing	Foot	106	-	106
Parapet Railing	Foot	98	-	98
Name Plates	Each	1	-	1
Geocomposite Wall Drain	Sq. Yd.	-	81	81
Weep Holes Cored	Each	-	3	3

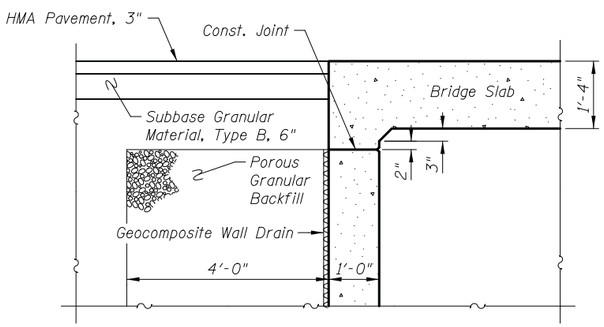

SECTION THRU ABUTMENT WITHOUT CORBEL

See Section thru Abutment with Corbel for balance of information.

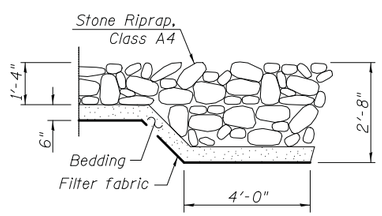

SECTION A-A

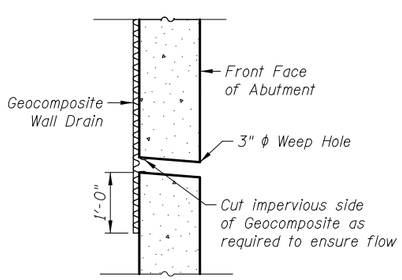

WEEP HOLE DRAIN DETAIL

** Weep hole spacing shall be at ±8'-0" horizontally

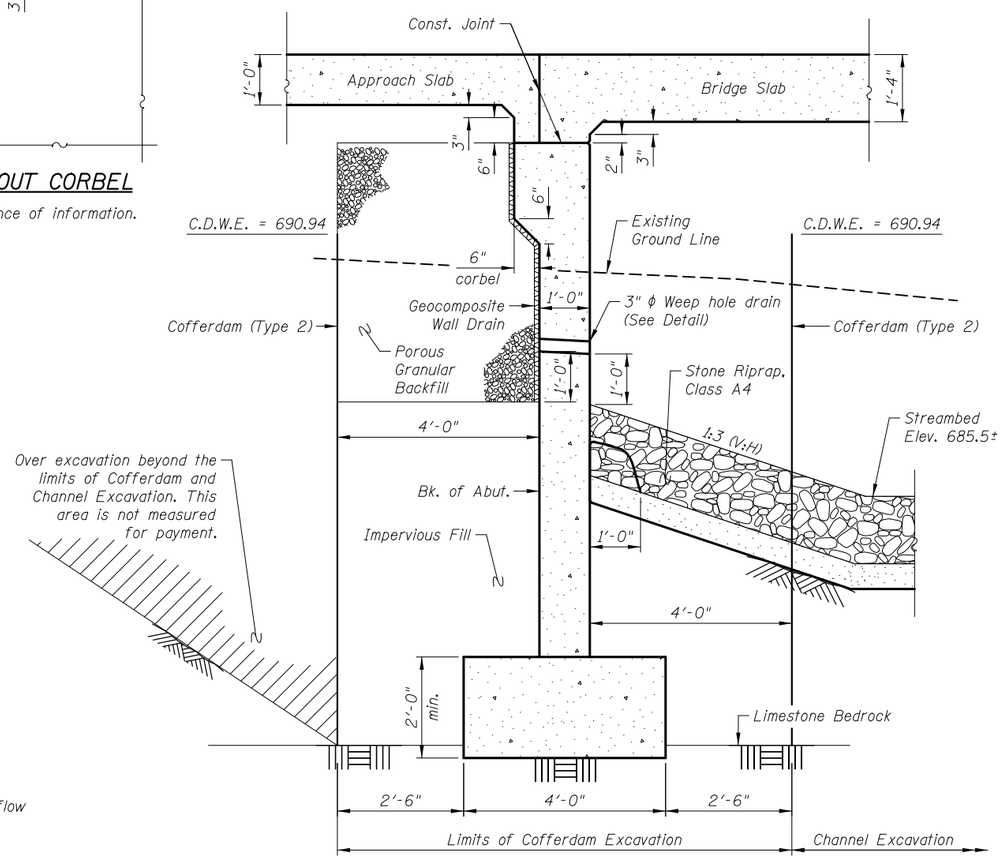

SECTION THRU ABUTMENT

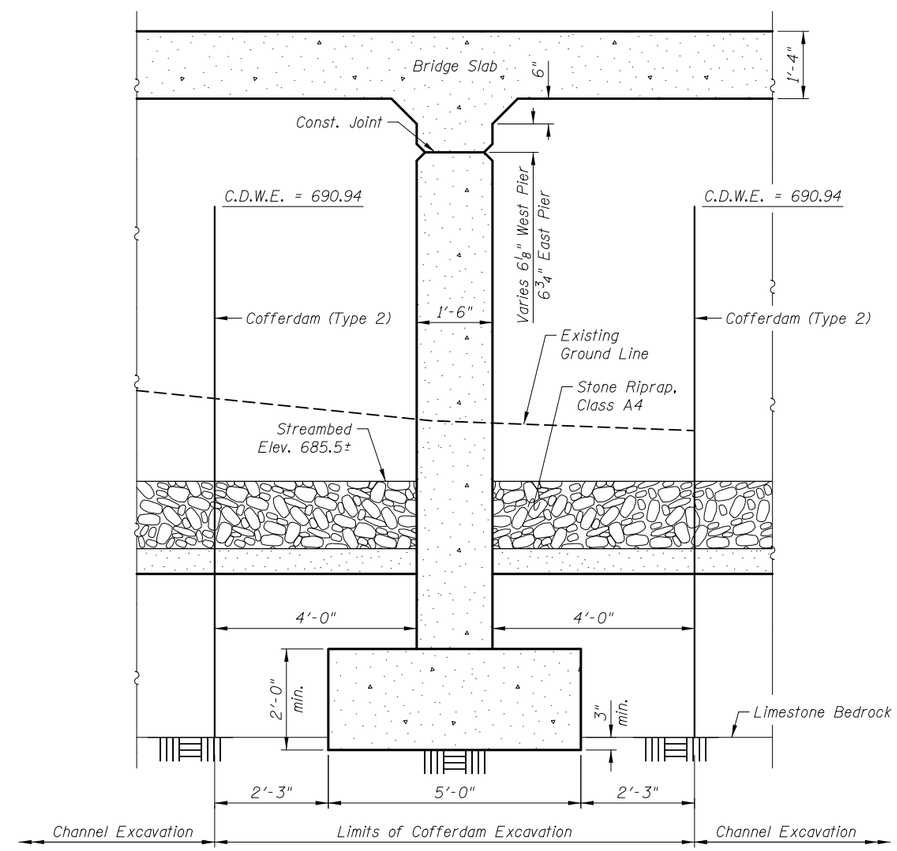

SECTION THRU PIER

CIVILTECH
450 E Devon Ave, Suite 300
Itasca, Illinois 60143
Tel: 630.773.3900 Fax: 630.773.3975
www.civiltechinc.com

DRAWN - K. KOMPARE	REVISED -		
DESIGNED - M. LANGE	REVISED -		
CHECKED - G. HATLESTAD	REVISED -		
DATE - 10/12/15	REVISED -		

STATE OF ILLINOIS
DEPARTMENT OF TRANSPORTATION

GENERAL DATA
DEERPATH ROAD OVER MILL CREEK
STRUCTURE NO. 045-3095

SHEET NO. S2 OF S15 SHEETS

F.A.U. RTE.	SECTION	COUNTY	TOTAL SHEETS	SHEET NO.
2327	07-00068-00-BR	KANE	78	40

CONTRACT NO. 61A88

ILLINOIS FED. AID PROJECT

c:\pw_working\civiltech_production\mjp\dms0255A\02_GeneralData.dgn
1:29:13 PM
mjp
10/9/2015

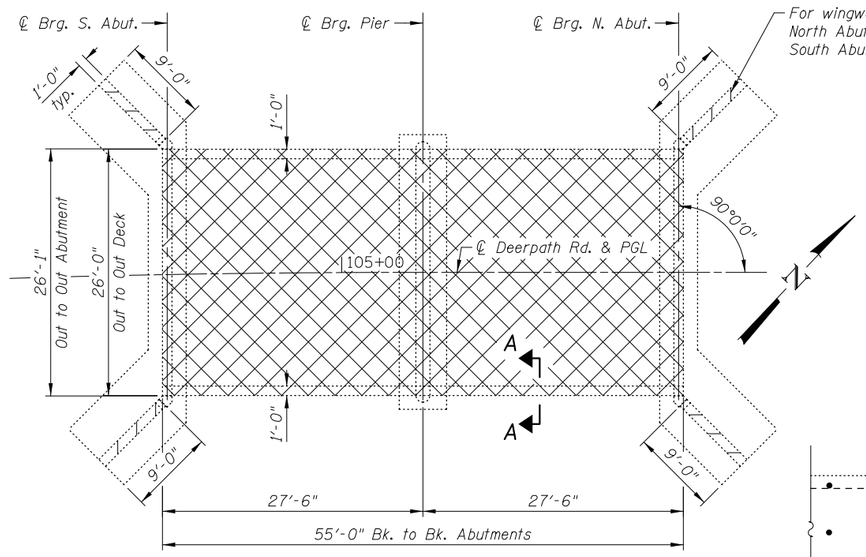

DECK PLAN

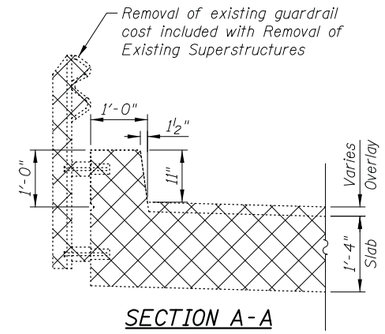

SECTION A-A

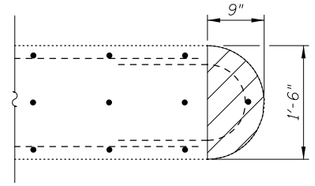

SECTION B-B

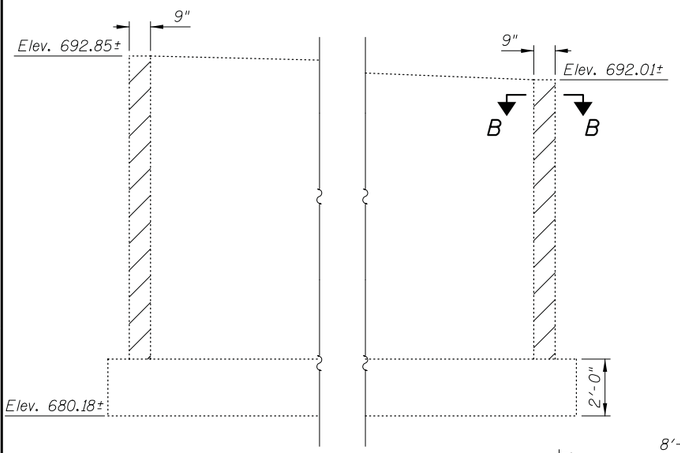

PIER ELEVATION

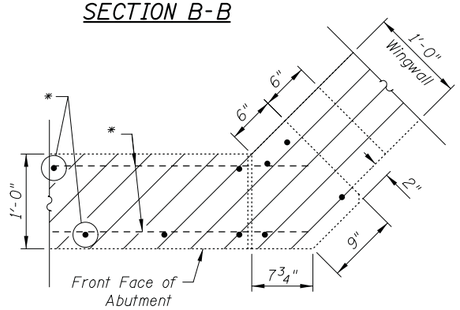

SECTION C-C

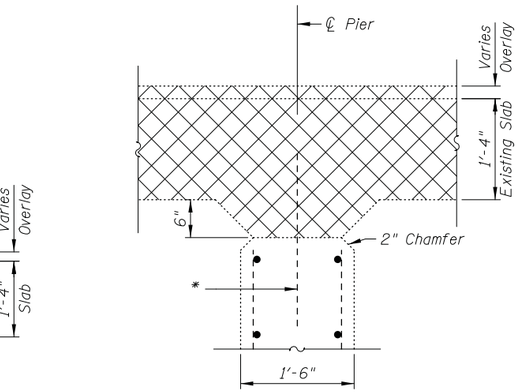

SECTION THRU EXISTING PIER

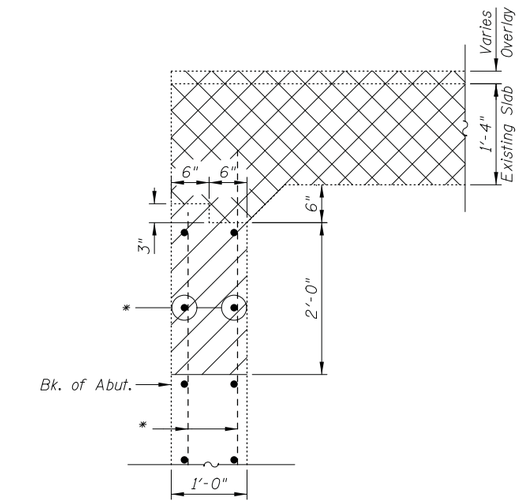

SECTION THRU EXISTING ABUTMENT

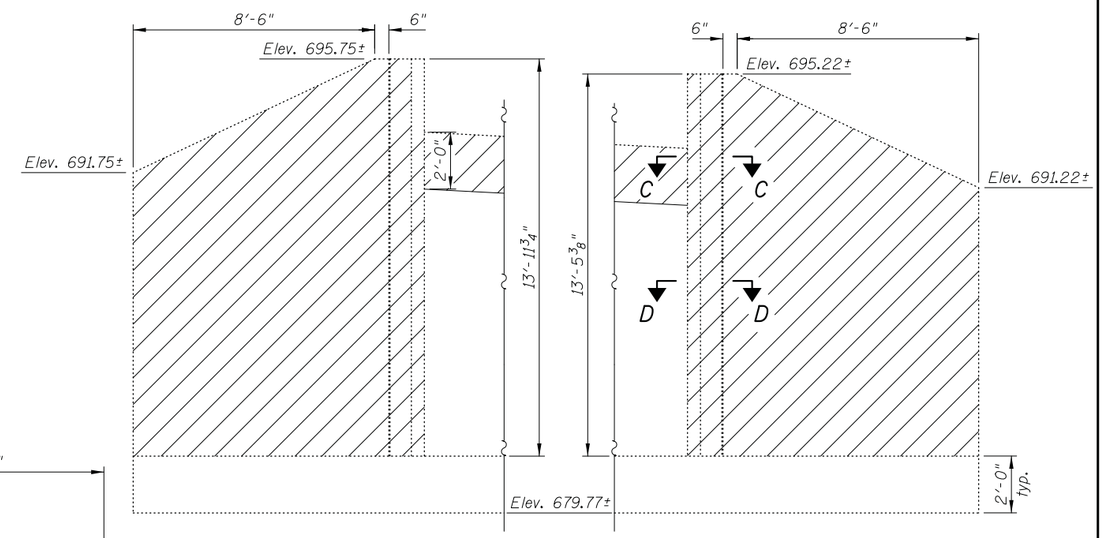

NORTH ABUTMENT WINGWALLS

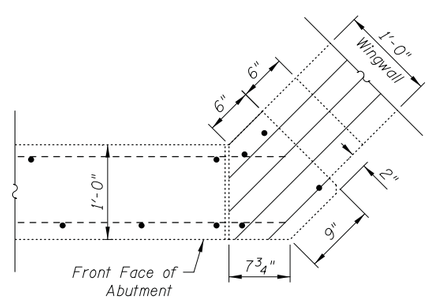

SECTION D-D

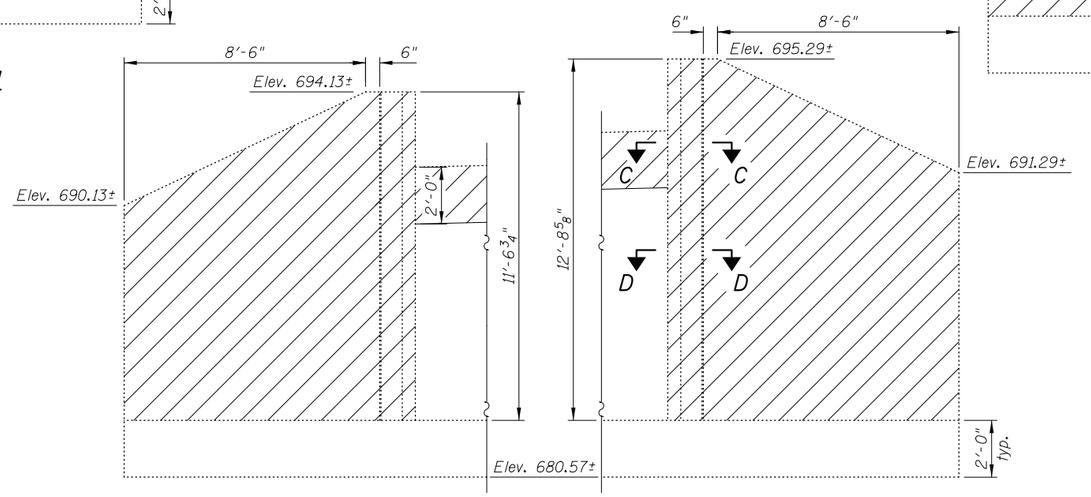

SOUTH ABUTMENT WINGWALLS

* Existing vertical, longitudinal, and transverse reinforcement shall be cleaned, straightened, and incorporated into the new construction. Cost included with Concrete Removal.

BILL OF MATERIAL

Item	Unit	Quantity
Removal of Existing Superstructures	Each	1
Concrete Removal	Cu. Yd.	21.6

LEGEND

Limits of Concrete Removal

Removal of Existing Superstructures

CIVILTECH
450 E Devon Ave, Suite 300
Itasca, Illinois 60143
Tel: 630.773.3900 Fax: 630.773.3975
www.civiltechinc.com

DRAWN	K. KOMPARE	REVISED	-
DESIGNED	M. LANGE	REVISED	-
CHECKED	G. HATLESTAD	REVISED	-
DATE	10/12/15	REVISED	-

STATE OF ILLINOIS
DEPARTMENT OF TRANSPORTATION

CONCRETE REMOVAL DETAILS
DEERPATH ROAD OVER MILL CREEK
STRUCTURE NO. 045-3095

SHEET NO. S3 OF S15 SHEETS

F.A.U. RTE.	SECTION	COUNTY	TOTAL SHEETS	SHEET NO.
2327	07-00068-00-BR	KANE	78	41

CONTRACT NO. 61A88

ILLINOIS FED. AID PROJECT

mjp 10/9/2015 1:29:17 PM c:\pw_working\civiltech_production\mjp\dms02554\03.Concrete RemovalDetails.dgn

WEST EDGE OF DECK

Location	Station	Offset	Theoretical Grade Elevations	Theoretical Grade Elevations Adjusted for Dead Load Deflection
Bk. S. Abut.	104+81.46	-21.44	694.83	694.83
CL S. Abut.	104+81.95	-21.43	694.83	694.83
A	104+91.80	-21.29	694.94	694.95
B	105+01.65	-21.22	695.07	695.08
CL Pier	105+08.57	-21.21	695.17	695.17
C	105+18.57	-21.21	695.34	695.35
D	105+28.57	-21.21	695.53	695.54
CL. N. Abut.	105+35.57	-21.21	695.67	695.67
Bk. N. Abut.	105+36.07	-21.21	695.69	695.69

CROWN

Location	Station	Offset	Theoretical Grade Elevations	Theoretical Grade Elevations Adjusted for Dead Load Deflection
Bk. S. Abut.	104+81.36	-15.82	694.92	694.92
CL S. Abut.	104+81.85	-15.81	694.93	694.93
A	104+91.74	-15.67	695.03	695.05
B	105+01.63	-15.58	695.16	695.17
CL Pier	105+08.57	-15.58	695.27	695.27
C	105+18.57	-15.58	695.44	695.44
D	105+28.57	-15.58	695.63	695.64
CL. N. Abut.	105+35.57	-15.58	695.77	695.77
Bk. N. Abut.	105+36.07	-15.58	695.78	695.78

FRONT FACE WEST PARAPET

Location	Station	Offset	Theoretical Grade Elevations	Theoretical Grade Elevations Adjusted for Dead Load Deflection
Bk. S. Abut.	104+81.33	-14.24	694.87	694.87
CL S. Abut.	104+81.82	-14.23	694.88	694.88
A	104+91.72	-14.08	694.99	695.00
B	105+01.62	-14.01	695.12	695.12
CL Pier	105+08.57	-14.00	695.22	695.22
C	105+18.57	-14.00	695.39	695.40
D	105+28.57	-14.00	695.58	695.59
CL. N. Abut.	105+35.57	-14.00	695.72	695.72
Bk. N. Abut.	105+36.07	-14.00	695.73	695.73

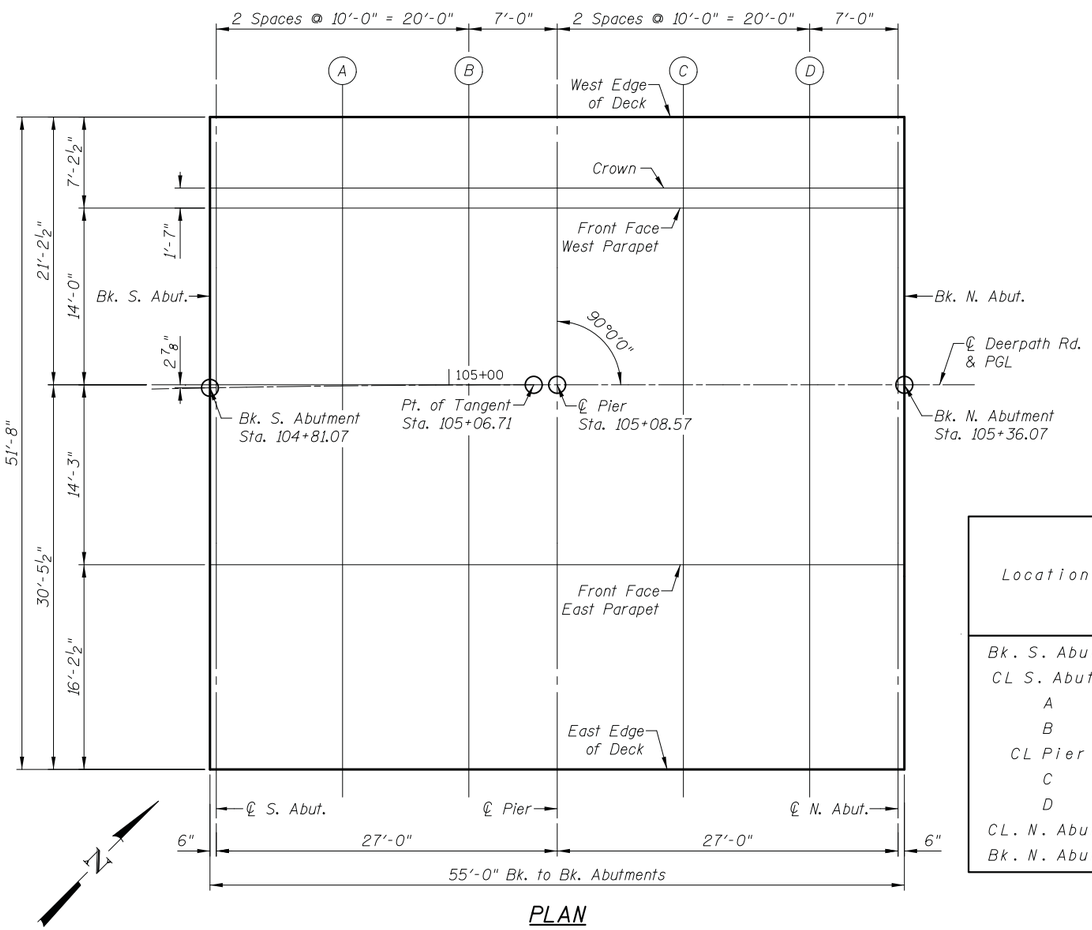

PLAN

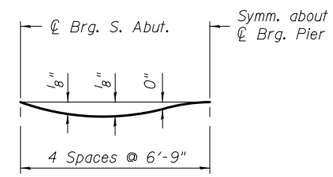

DEAD LOAD DEFLECTION DIAGRAM

(Includes weight of concrete only.)

Note:
The above deflections are not to be used in the field if the engineer is working from the grade elevations adjusted for dead load deflections as shown below.

℄ DEERPATH RD. & PGL

Location	Station	Offset	Theoretical Grade Elevations	Theoretical Grade Elevations Adjusted for Dead Load Deflection
Bk. S. Abut.	104+81.07	0.00	694.44	694.44
CL S. Abut.	104+81.57	0.00	694.45	694.45
A	104+91.57	0.00	694.56	694.57
B	105+01.57	0.00	694.70	694.70
CL Pier	105+08.57	0.00	694.80	694.80
C	105+18.57	0.00	694.97	694.98
D	105+28.57	0.00	695.16	695.17
CL. N. Abut.	105+35.57	0.00	695.30	695.30
Bk. N. Abut.	105+36.07	0.00	695.31	695.31

EAST EDGE OF DECK

Location	Station	Offset	Theoretical Grade Elevations	Theoretical Grade Elevations Adjusted for Dead Load Deflection
Bk. S. Abut.	104+80.50	30.21	693.72	693.72
CL S. Abut.	104+81.01	30.22	693.73	693.73
A	104+91.23	30.37	693.84	693.85
B	105+01.45	30.45	693.97	693.98
CL Pier	105+08.57	30.46	694.08	694.08
C	105+18.57	30.46	694.25	694.25
D	105+28.57	30.46	694.44	694.45
CL. N. Abut.	105+35.57	30.46	694.58	694.58
Bk. N. Abut.	105+36.07	30.46	694.59	694.59

FRONT FACE EAST PARAPET

Location	Station	Offset	Theoretical Grade Elevations	Theoretical Grade Elevations Adjusted for Dead Load Deflection
Bk. S. Abut.	104+80.81	14.01	694.02	694.02
CL S. Abut.	104+81.31	14.02	694.02	694.02
A	104+91.41	14.17	694.13	694.15
B	105+01.52	14.24	694.27	694.27
CL Pier	105+08.57	14.25	694.37	694.37
C	105+18.57	14.25	694.54	694.55
D	105+28.57	14.25	694.73	694.74
CL. N. Abut.	105+35.57	14.25	694.88	694.88
Bk. N. Abut.	105+36.07	14.25	694.89	694.89

CIVILTECH
450 E Devon Ave, Suite 300
Itasca, Illinois 60143
Tel: 630.773.3900 Fax: 630.773.3975
www.civiltechinc.com

DRAWN - K. KOMPARE	REVISED -		
DESIGNED - M. LANGE	REVISED -		
CHECKED - G. HATLESTAD	REVISED -		
DATE - 10/12/15	REVISED -		

STATE OF ILLINOIS
DEPARTMENT OF TRANSPORTATION

TOP OF SLAB ELEVATIONS
DEERPATH ROAD OVER MILL CREEK
STRUCTURE NO. 045-3095

SHEET NO. S4 OF S15 SHEETS

F.A.U. RTE.	SECTION	COUNTY	TOTAL SHEETS	SHEET NO.
2327	07-00068-00-BR	KANE	78	42

CONTRACT NO. 61A88

ILLINOIS FED. AID PROJECT

c:\pw_working\civiltech_production\mjp\dms02554\04_Top of Slab Elevations.dgn
1:29:20 PM
mjp
10/9/2015

WEST EDGE OF SHOULDER

Location	Station	Offset	Theoretical Grade Elevations
S. End S. Appr. Pav't	104+66.49	-14.65	694.75
A	104+76.39	-14.65	694.84
N. End S. Appr. Pav't	104+81.34	-14.65	694.89
S. End N. Appr. Pav't	105+36.07	-14.42	695.75
B	105+46.07	-14.42	695.97
N. End N. Appr. Pav't	105+51.07	-14.42	696.09

WEST EDGE OF PAVEMENT

Location	Station	Offset	Theoretical Grade Elevations
S. End S. Appr. Pav't	104+66.41	-12.00	694.67
A	104+76.33	-12.00	694.76
N. End S. Appr. Pav't	104+81.29	-12.00	694.81
S. End N. Appr. Pav't	105+36.07	-12.00	695.67
B	105+46.07	-12.00	695.90
N. End N. Appr. Pav't	105+51.07	-12.00	696.02

℄ DEERPATH ROAD & PGL

Location	Station	Offset	Theoretical Grade Elevations
S. End S. Appr. Pav't	104+66.07	0.00	694.31
A	104+76.07	0.00	694.39
N. End S. Appr. Pav't	104+81.07	0.00	694.44
S. End N. Appr. Pav't	105+36.07	0.00	695.31
B	105+46.07	0.00	695.54
N. End N. Appr. Pav't	105+51.07	0.00	695.66

EAST EDGE OF PAVEMENT

Location	Station	Offset	Theoretical Grade Elevations
S. End S. Appr. Pav't	104+65.71	12.00	693.95
A	104+75.80	12.00	694.03
N. End S. Appr. Pav't	104+80.84	12.00	694.08
S. End N. Appr. Pav't	105+36.07	12.00	694.95
B	105+46.07	12.00	695.18
N. End N. Appr. Pav't	105+51.07	12.00	695.30

EAST EDGE OF SHOULDER

Location	Station	Offset	Theoretical Grade Elevations
S. End S. Appr. Pav't	104+65.63	14.43	693.88
A	104+75.74	14.43	693.96
N. End S. Appr. Pav't	104+80.80	14.43	694.01
S. End N. Appr. Pav't	105+36.07	14.67	694.87
B	105+46.07	14.67	695.10
N. End N. Appr. Pav't	105+51.07	14.67	695.22

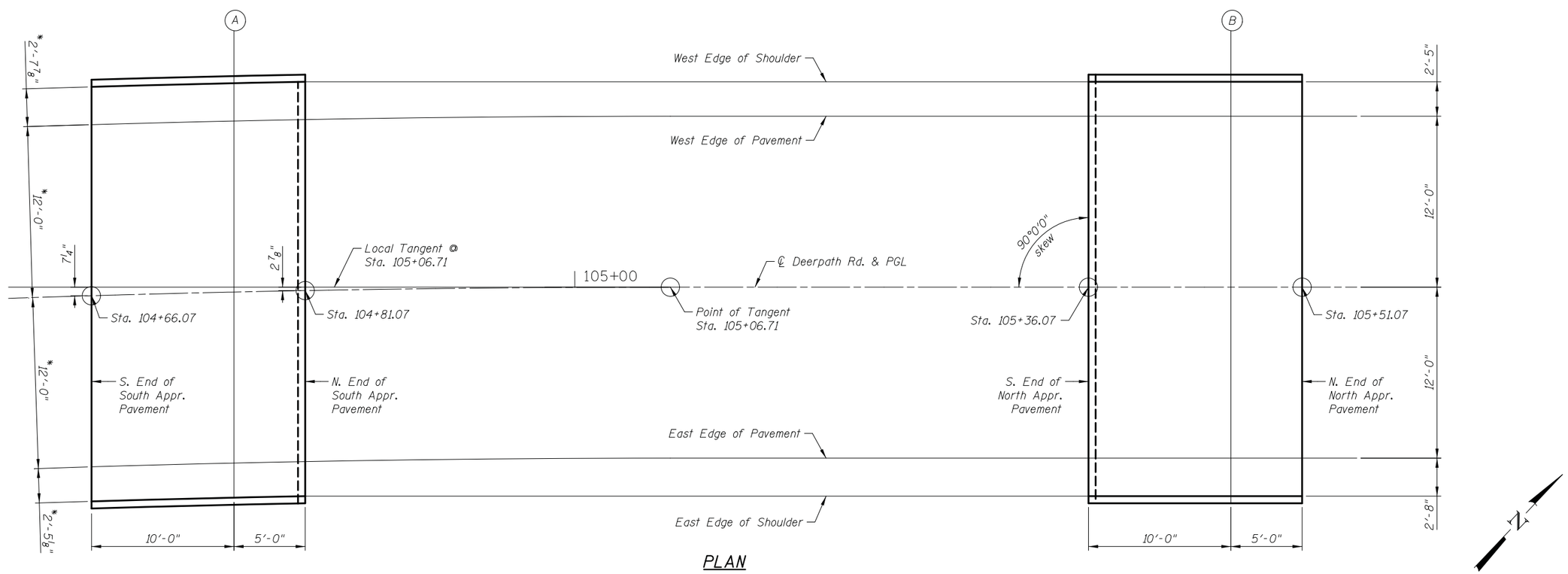

PLAN

* Indicates dimensions are radial

CIVILTECH
450 E Devon Ave, Suite 300
Itasca, Illinois 60143
Tel: 630.773.3900 Fax: 630.773.3975
www.civiltechinc.com

DRAWN - K. KOMPARE	REVISED -		
DESIGNED - M. LANGE	REVISED -		
CHECKED - G. HATLESTAD	REVISED -		
DATE - 10/12/15	REVISED -		

STATE OF ILLINOIS
DEPARTMENT OF TRANSPORTATION

TOP OF APPROACH SLAB ELEVATIONS
DEERPATH ROAD OVER MILL CREEK
STRUCTURE NO. 045-3095

SHEET NO. S5 OF S15 SHEETS

F.A.U. RTE.	SECTION	COUNTY	TOTAL SHEETS	SHEET NO.
2327	07-00068-00-BR	KANE	78	43

CONTRACT NO. 61A88

ILLINOIS FED. AID PROJECT

mjp 10/9/2015 1:29:24 PM c:\pw_working\civiltech_production\mjp\dms02554\05_Top of Approach Slab Elevations.rl.dgn

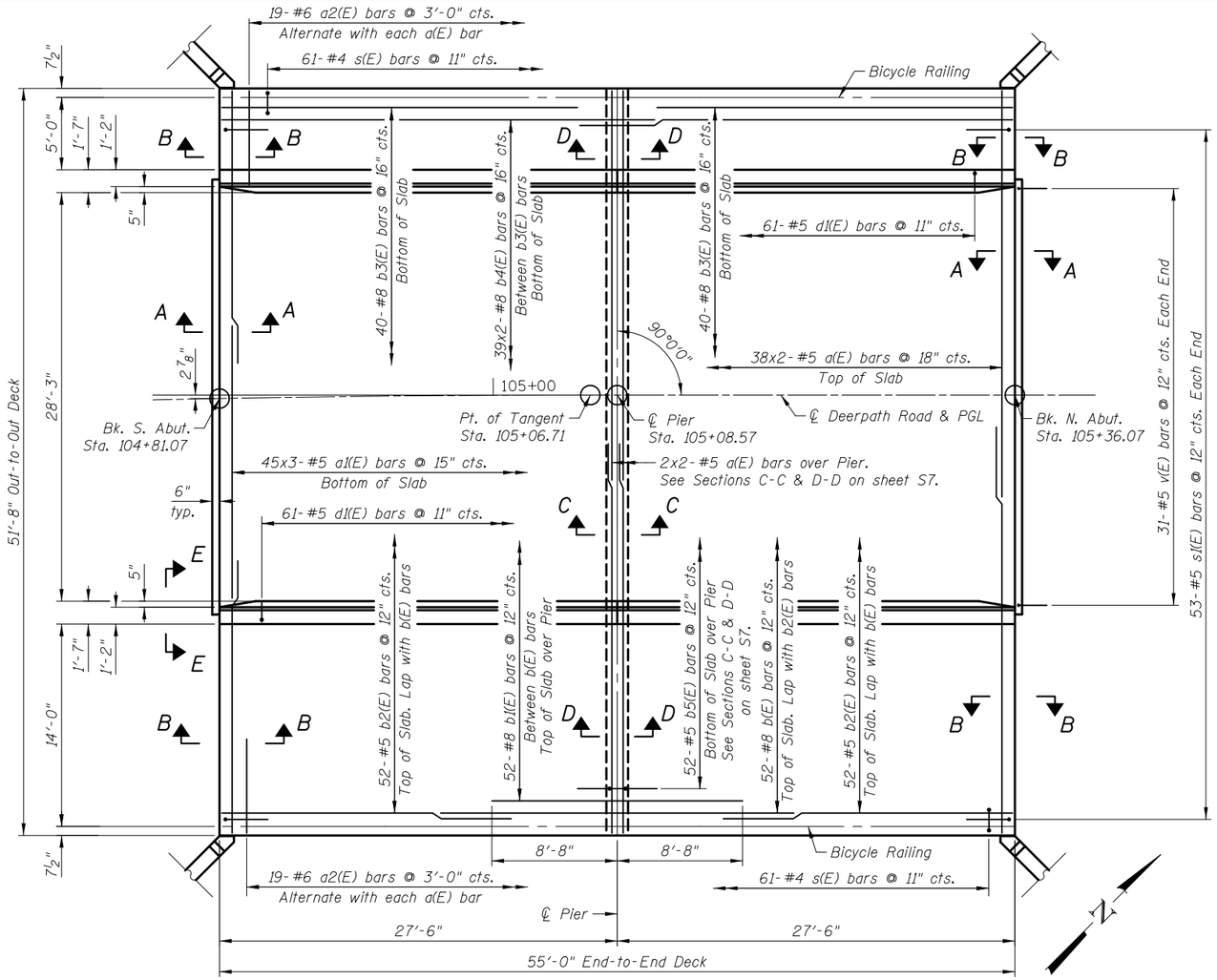

PLAN

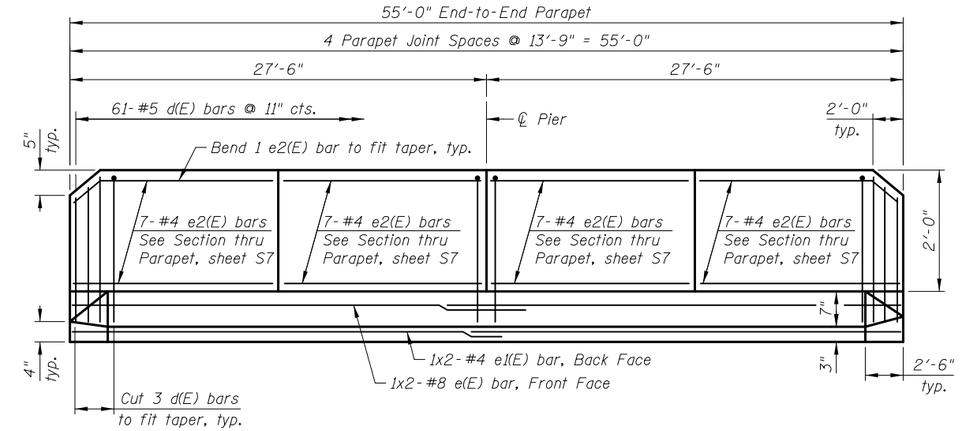

INSIDE ELEVATION OF WEST PARAPET

(Looking West)
East Parapet is mirror image of West Parapet

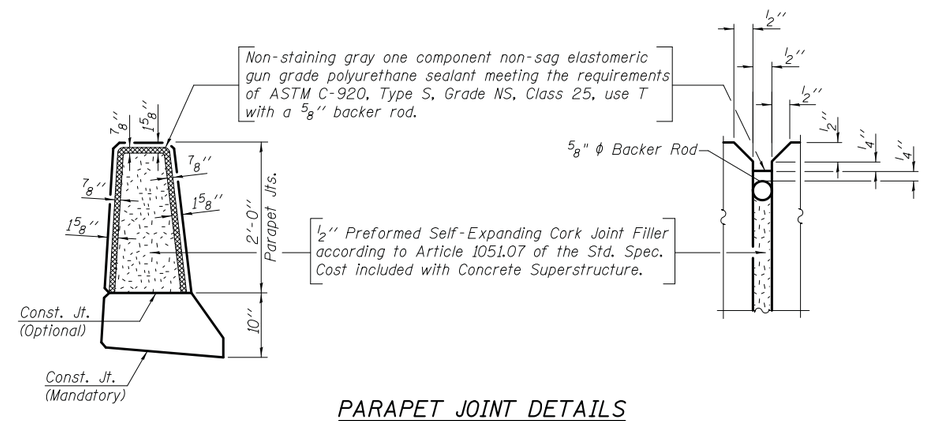

PARAPET JOINT DETAILS

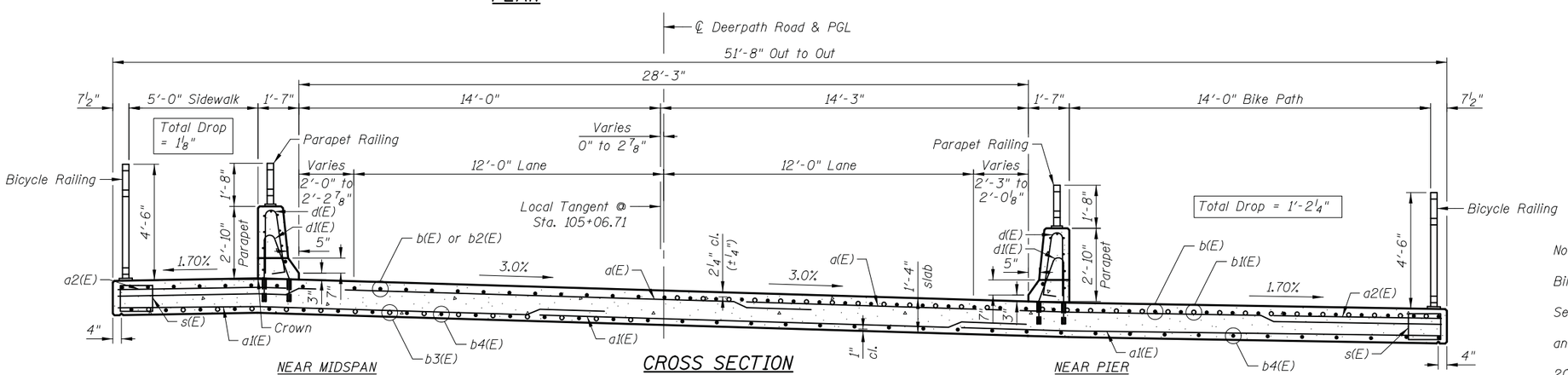

CROSS SECTION

(Looking North)

MINIMUM LAPS

(Slab)
Basic Laps
#4 bar = 2'-0"
#5 bar = 2'-6"
#8 bar = 5'-2"
Top Bar Laps
#5 bar = 4'-10"

Notes:

See sheet S7 for Superstructure Details and Bill of Material.

See sheet S7 for Section Thru East Parapet & Section Thru West Parapet.

See sheet S7 for Sections A-A, B-B, C-C, D-D and View E-E.

Bars indicated thus 20x3-#5 etc. indicates 20 lines of bars with 3 lengths per line.

CIVILTECH
450 E Devon Ave, Suite 300
Itasca, Illinois 60143
Tel: 630.773.3900 Fax: 630.773.3975
www.civiltechinc.com

DRAWN - K. KOMPARE	REVISED -		
DESIGNED - M. LANGE	REVISED -		
CHECKED - G. HATLESTAD	REVISED -		
DATE - 10/12/15	REVISED -		

STATE OF ILLINOIS
DEPARTMENT OF TRANSPORTATION

SLAB PLAN AND CROSS SECTION
DEERPATH ROAD OVER MILL CREEK
STRUCTURE NO. 045-3095
SHEET NO. S6 OF S15 SHEETS

F.A.U. RTE.	SECTION	COUNTY	TOTAL SHEETS	SHEET NO.
2327	07-00068-00-BR	KANE	78	44

CONTRACT NO. 61A88
ILLINOIS FED. AID PROJECT

c:\pw_working\civiltech_production\mjp\dms02554\06_Superstructure.dgn
11:29:27 PM
mjp
10/9/2015

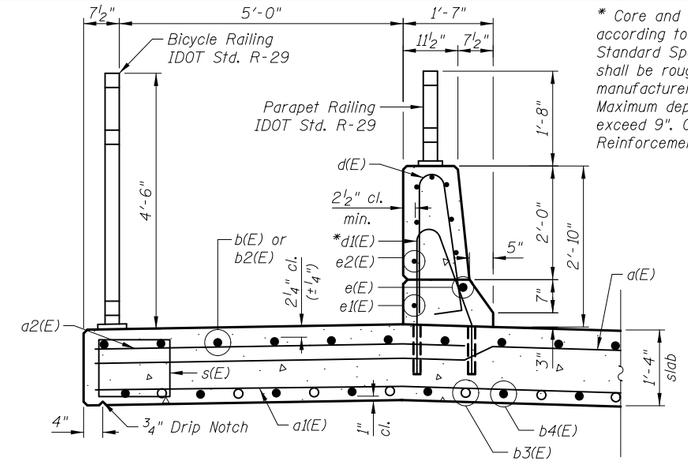

* Core and set #5 d1(E) bars according to Article 509.06 of the Standard Specifications. Cored holes shall be roughened or scored per manufacturer's recommendations. Maximum depth of hole shall not exceed 9". Cost included with Reinforcement Bars, Epoxy Coated.

SECTION THRU WEST PARAPET

NEAR MIDSPAN

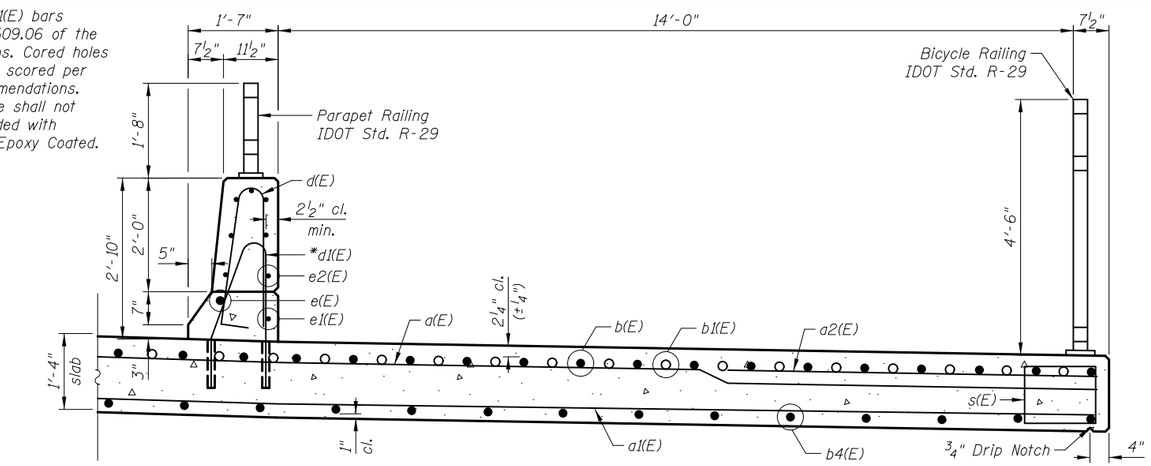

SECTION THRU EAST PARAPET

NEAR PIER

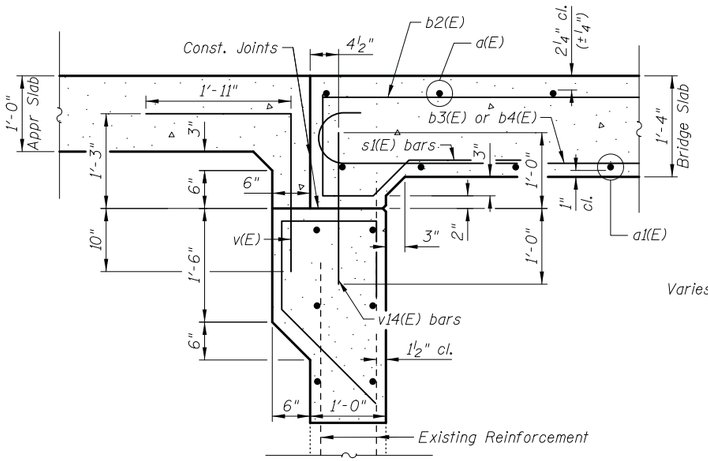

SECTION A-A

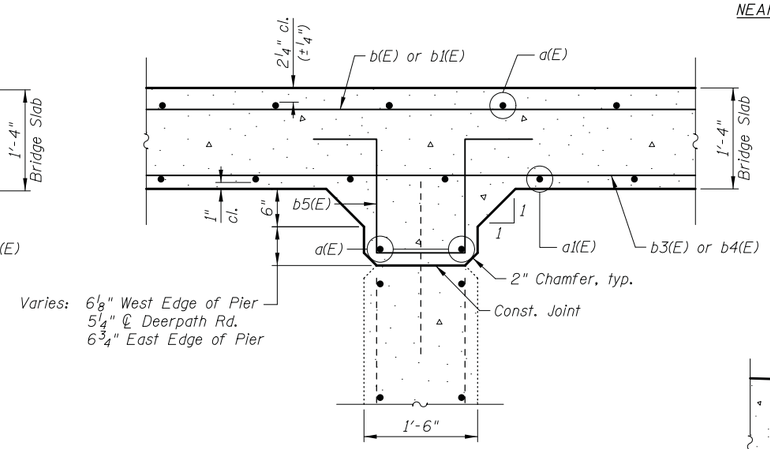

SECTION C-C

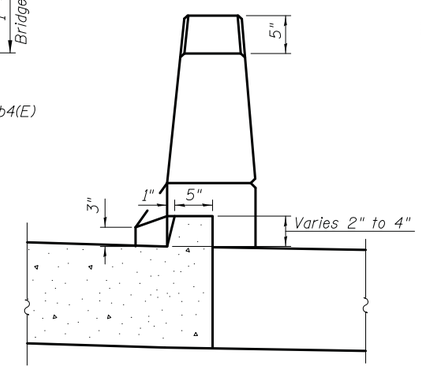

VIEW E-E

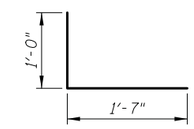

BAR a3(E)

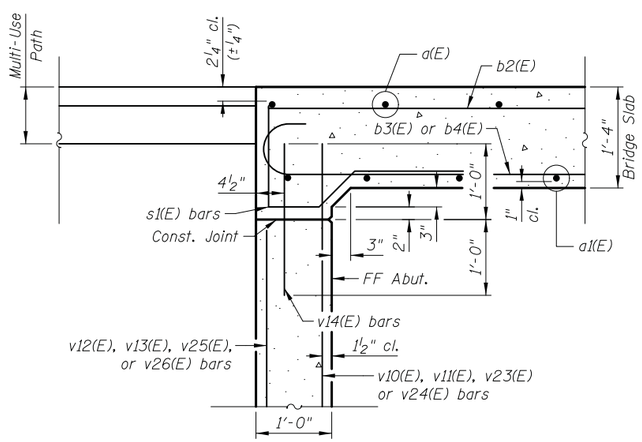

SECTION B-B

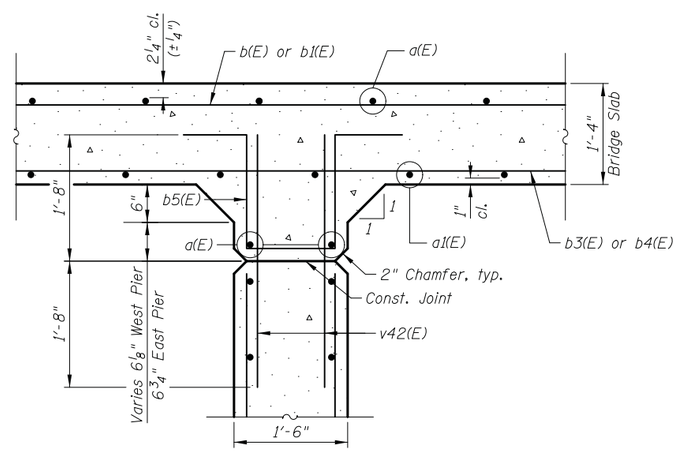

SECTION D-D

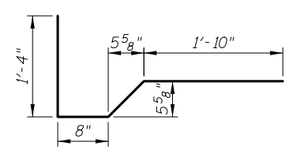

BAR S1(E)

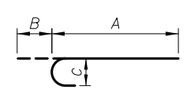

BARS b3(E) AND b4(E)

Bar	A	B	C
b3(E)	24'-7"	11"	8"
b4(E)	29'-11"	11"	8"

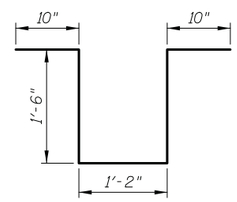

BAR b5(E)

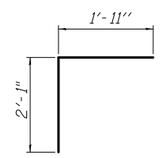

BAR v(E)

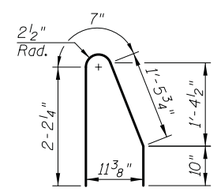

BAR d1(E)

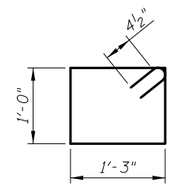

BAR s(E)

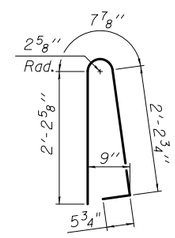

BAR d(E)

SUPERSTRUCTURE BILL OF MATERIAL

Bar	No.	Size	Length	Shape
a(E)	80	#5	28'-1"	
a1(E)	135	#5	18'-10"	
a2(E)	38	#6	6'-6"	
b(E)	52	#8	24'-5"	
b1(E)	52	#8	17'-4"	
b2(E)	104	#5	20'-0"	
b3(E)	80	#8	25'-6"	
b4(E)	78	#8	30'-10"	
b5(E)	52	#5	5'-10"	
d(E)	122	#5	5'-7"	
d1(E)	122	#5	5'-1"	
e(E)	4	#8	29'-11"	
e1(E)	4	#4	28'-4"	
e2(E)	56	#4	13'-5"	
s(E)	122	#4	5'-3"	
s1(E)	106	#5	4'-6"	
v(E)	62	#5	4'-0"	

Item	Unit	Quantity
Concrete Superstructure	Cu. Yd.	159.0
Bridge Deck Grooving	Sq. Yd.	297
Protective Coat	Sq. Yd.	379
Reinforcement Bars, Epoxy Coated	Pound	28,960

Notes:

All edges have a ¾" chamfer, unless otherwise noted.

See sheet S6 for Section A-A, B-B, C-C, and D-D locations.

CIVILTECH
450 E Devon Ave, Suite 300
Itasca, Illinois 60143
Tel: 630.773.3900 Fax: 630.773.3975
www.civiltechinc.com

DRAWN - K. KOMPARE	REVISED -		
DESIGNED - M. LANGE	REVISED -		
CHECKED - G. HATLESTAD	REVISED -		
DATE - 10/12/15	REVISED -		

STATE OF ILLINOIS
DEPARTMENT OF TRANSPORTATION

SUPERSTRUCTURE DETAILS
DEERPATH ROAD OVER MILL CREEK
STRUCTURE NO. 045-3095

SHEET NO. S7 OF S15 SHEETS

F.A.U. RTE.	SECTION	COUNTY	TOTAL SHEETS	SHEET NO.
2327	07-00068-00-BR	KANE	78	45

CONTRACT NO. 61A88

ILLINOIS FED. AID PROJECT

mjp 10/9/2015 11:29:30 PM c:\pw_working\civiltech_production\mjp\dms02554\07_Superstructure Details.dgn

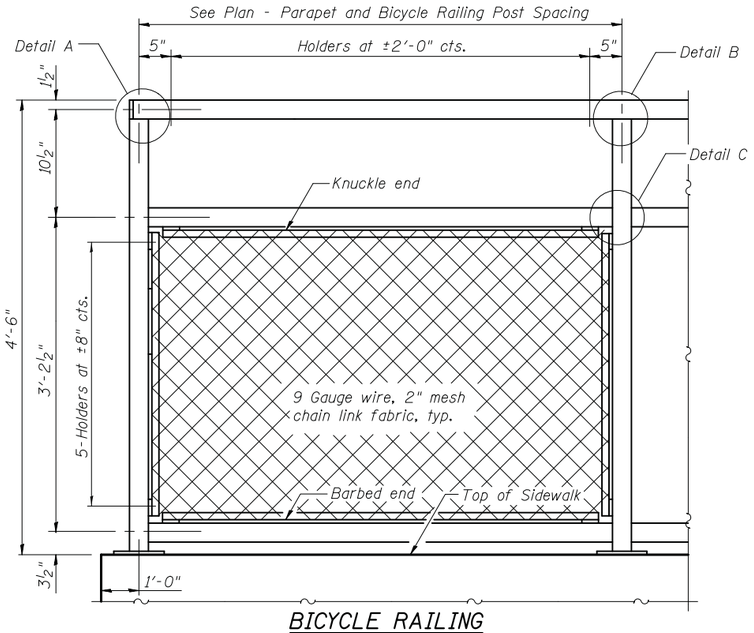

BICYCLE RAILING

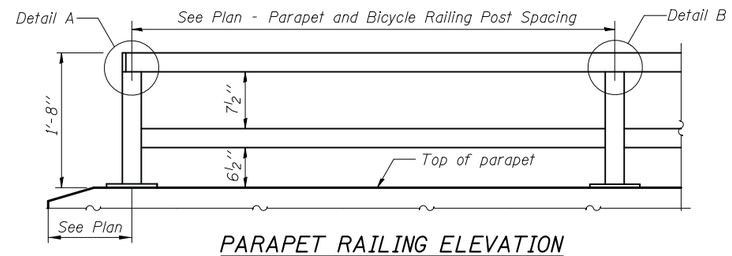

PARAPET RAILING ELEVATION

(Inside Face of Two Element Rail)

All steel rail elements shall be galvanized according to Article 509.05 of the Standard Specifications.

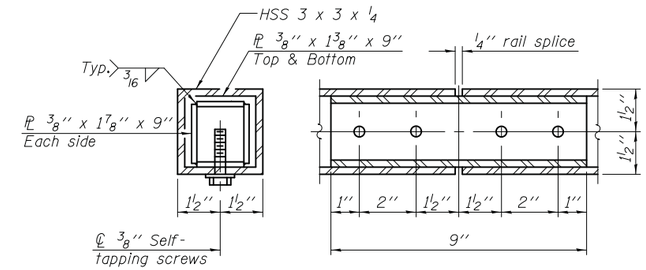

RAIL SPLICE

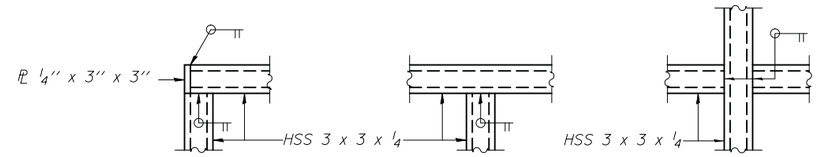

DETAIL A DETAIL B DETAIL C

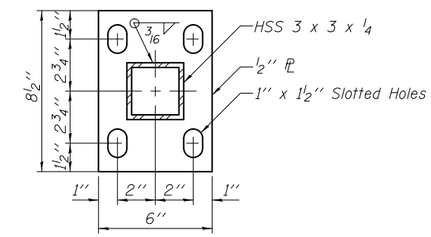

BASE PL

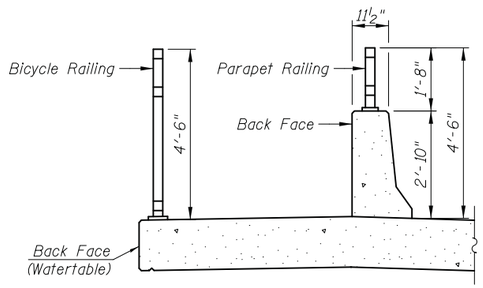

SECTION THRU DECK

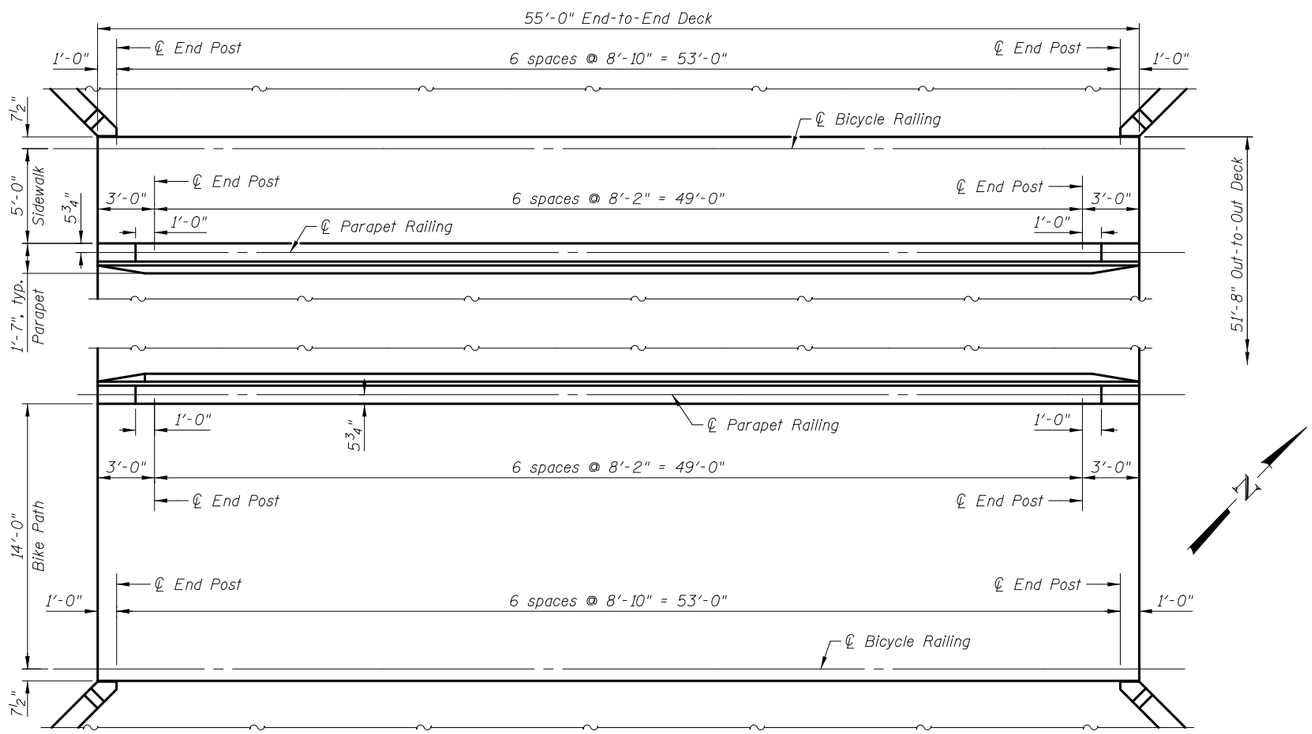

PARTIAL PLAN - PARAPET AND BICYCLE RAILING POST SPACING

(R-29)

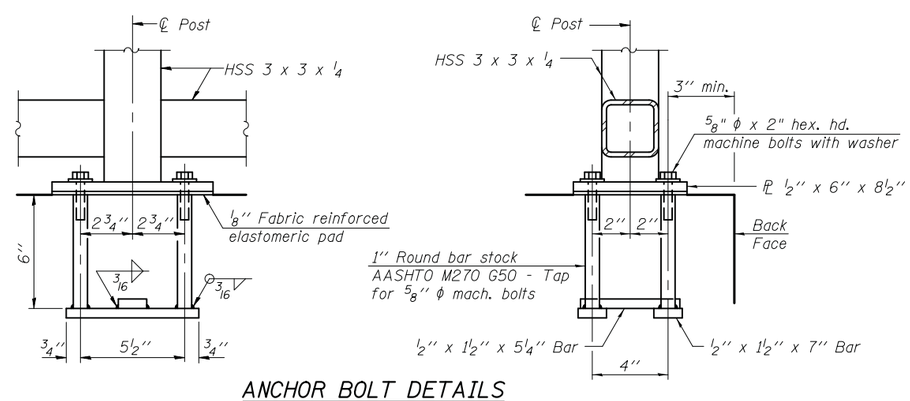

ANCHOR BOLT DETAILS

In lieu of the cast-in-place anchor device shown, the Contractor has the option of drilling and setting ⅝" ϕ anchor rods according to Article 509.06 of the Standard Specifications. Embedment shall be according to the manufacturer's specifications.

BILL OF MATERIAL

Item	Unit	Quantity
Bicycle Railing	Foot	106
Parapet Railing	Foot	98

CIVILTECH
450 E Devon Ave, Suite 300
Itasca, Illinois 60143
Tel: 630.773.3900 Fax: 630.773.3975
www.civiltechinc.com

DRAWN	K. KOMPARE	REVISED	-
DESIGNED	M. LANGE	REVISED	-
CHECKED	G. HATLESTAD	REVISED	-
DATE	10/12/15	REVISED	-

STATE OF ILLINOIS
DEPARTMENT OF TRANSPORTATION

BICYCLE RAILING DETAILS
DEERPATH ROAD OVER MILL CREEK
STRUCTURE NO. 045-3095

SHEET NO. S8 OF S15 SHEETS

F.A.U. RTE.	SECTION	COUNTY	TOTAL SHEETS	SHEET NO.
2327	07-00068-00-BR	KANE	78	46

CONTRACT NO. 61A88

ILLINOIS FED. AID PROJECT

c:\pw_working\civiltech_production\mjp\dms02554\08_Bicycle Railing.dgn
1:29:34 PM
mjp
10/9/2015

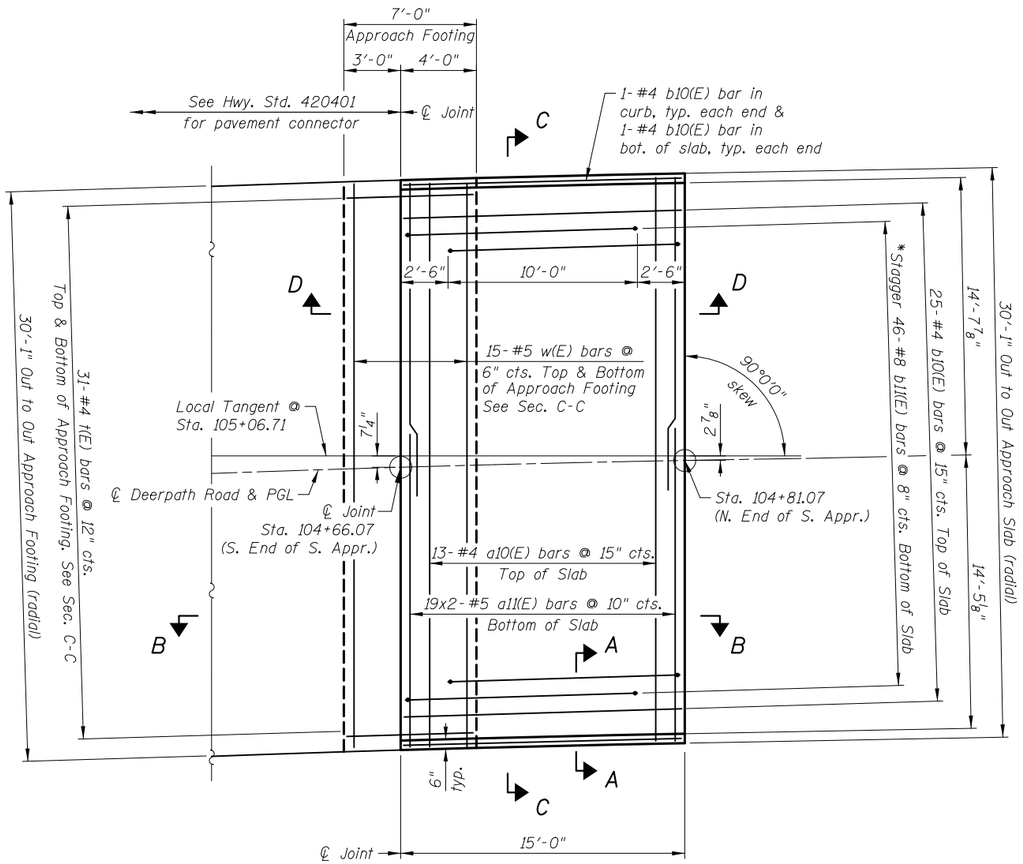

PLAN - SOUTH APPROACH

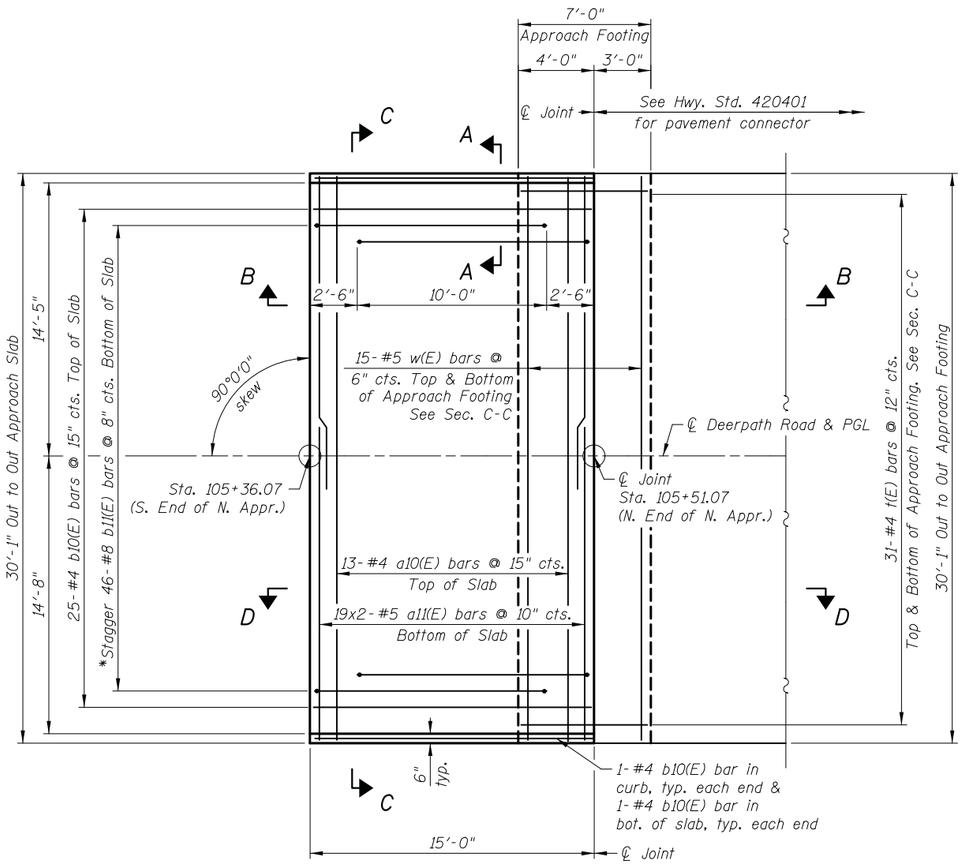

PLAN - NORTH APPROACH

* Tilt #9 b11(E) bars as required to maintain clearance.

MINIMUM LAP

(Approach Slab)

#5 bar = 3'-3"

Notes:

a10(E) and a11(E) bar spacings measured along ℄ roadway.
See sheet S10 for Views A-A & D-D and Sections B-B & C-C.
See sheet S10 for Bill of Material.

CIVILTECH
450 E Devon Ave, Suite 300
Itasca, Illinois 60143
Tel: 630.773.3900 Fax: 630.773.3975
www.civiltechinc.com

DRAWN - K. KOMPARE	REVISED -		
DESIGNED - M. LANGE	REVISED -		
CHECKED - G. HATLESTAD	REVISED -		
DATE - 10/12/15	REVISED -		

STATE OF ILLINOIS
DEPARTMENT OF TRANSPORTATION

BRIDGE APPROACH SLABS
DEERPATH ROAD OVER MILL CREEK
STRUCTURE NO. 045-3095

SHEET NO. S9 OF S15 SHEETS

F.A.U. RTE.	SECTION	COUNTY	TOTAL SHEETS	SHEET NO.
2327	07-00068-00-BR	KANE	78	47

CONTRACT NO. 61A88

ILLINOIS FED. AID PROJECT

mjp 10/9/2015 1:29:37 PM c:\pw_working\civiltech_production\mjp\dms02554\09_Bridge Approach Slabs.rl.dgn

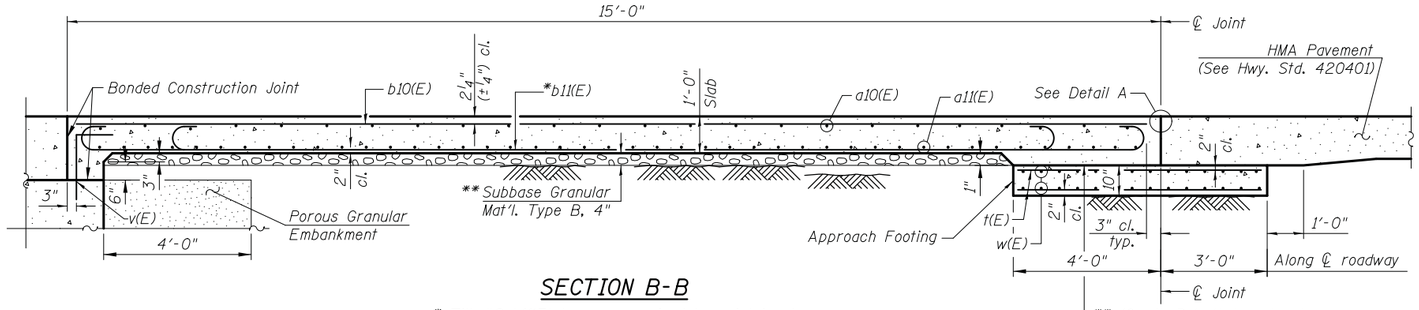

SECTION B-B

* Tilt #8 b11(E) bars as required to maintain clearance.
** Cost included with Concrete Superstructure.

Notes:

Approach slab concrete and curb shall be paid for as Concrete Superstructure.
Approach footing concrete shall be paid for as Concrete Structures.
Reinforcement shall be paid for as Reinforcement Bars, Epoxy Coated.
For v(E) bar details, see sheet S7.
The approach footing maximum applied service bearing pressure (Qmax) = 2.0 ksf.
Cost of excavation for approach footing included with Concrete Structures.
For Porous Granular Embankment and drainage treatment details, see sheet S2.
See sheet S9 for Section B-B, C-C, and View D-D locations.

TWO APPROACHES BILL OF MATERIAL

Bar	No.	Size	Length	Shape
a10(E)	26	#4	30'-2"	
a11(E)	76	#5	16'-6"	
b10(E)	58	#4	14'-8"	
b11(E)	92	#8	14'-1"	
t(E)	124	#4	6'-8"	
w(E)	60	#5	29'-9"	

Item	Unit	Quantity
Concrete Structures	Cu. Yd.	13.0
Concrete Superstructure	Cu. Yd.	35.4
Bridge Deck Grooving	Sq. Yd.	97
Protective Coat	Sq. Yd.	102
Reinforcement Bars, Epoxy Coated	Pound	8,280

Bars indicated thus 1x3-#8 etc. indicates 1 line of bars with 3 lengths per line.

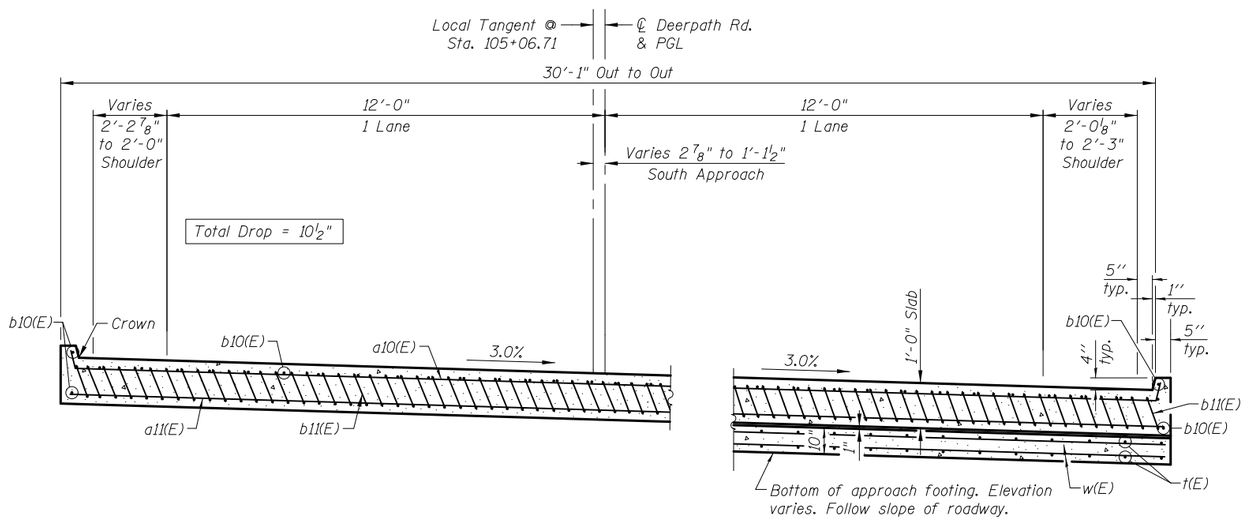

NEAR ABUTMENT

AT APPROACH FOOTING

SECTION C-C

(See Plan for dimensions not shown)
Looking North

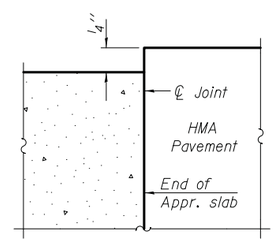

DETAIL A

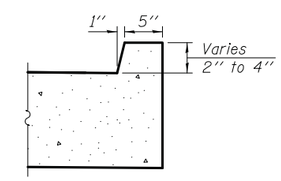

VIEW A-A

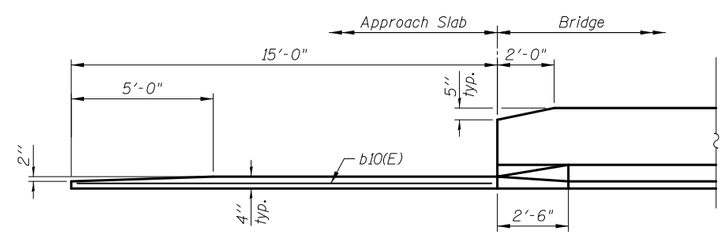

VIEW D-D

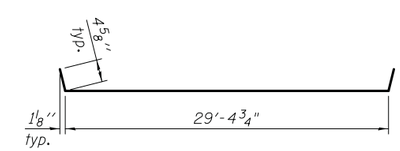

BAR a10(E)

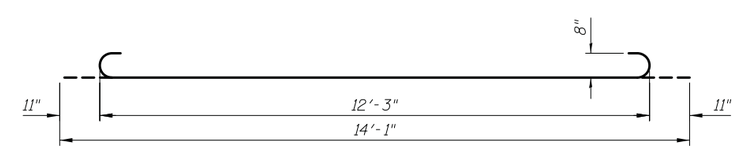

BAR b11(E)

CIVILTECH
450 E Devon Ave, Suite 300
Itasca, Illinois 60143
Tel: 630.773.3900 Fax: 630.773.3975
www.civiltechinc.com

DRAWN - K. KOMPARE	REVISED -	
DESIGNED - M. LANGE	REVISED -	
CHECKED - G. HATLESTAD	REVISED -	
DATE - 10/12/15	REVISED -	

STATE OF ILLINOIS
DEPARTMENT OF TRANSPORTATION

BRIDGE APPROACH SLAB DETAILS
DEERPATH ROAD OVER MILL CREEK
STRUCTURE NO. 045-3095

SHEET NO. S10 OF S15 SHEETS

F.A.U. RTE.	SECTION	COUNTY	TOTAL SHEETS	SHEET NO.
2327	07-00068-00-BR	KANE	78	48
		CONTRACT NO. 61A88		
		ILLINOIS FED. AID PROJECT		

mjp 10/9/2015 1:29:40 PM c:\pw_working\civiltech_production\mjp\dms02554\10_Bridge Approach Slab Details.rl.dgn

MINIMUM LAP

(North Abutment)
#4 bar = 2'-7"
#5 bar = 3'-3"
#6 bar = 3'-10"

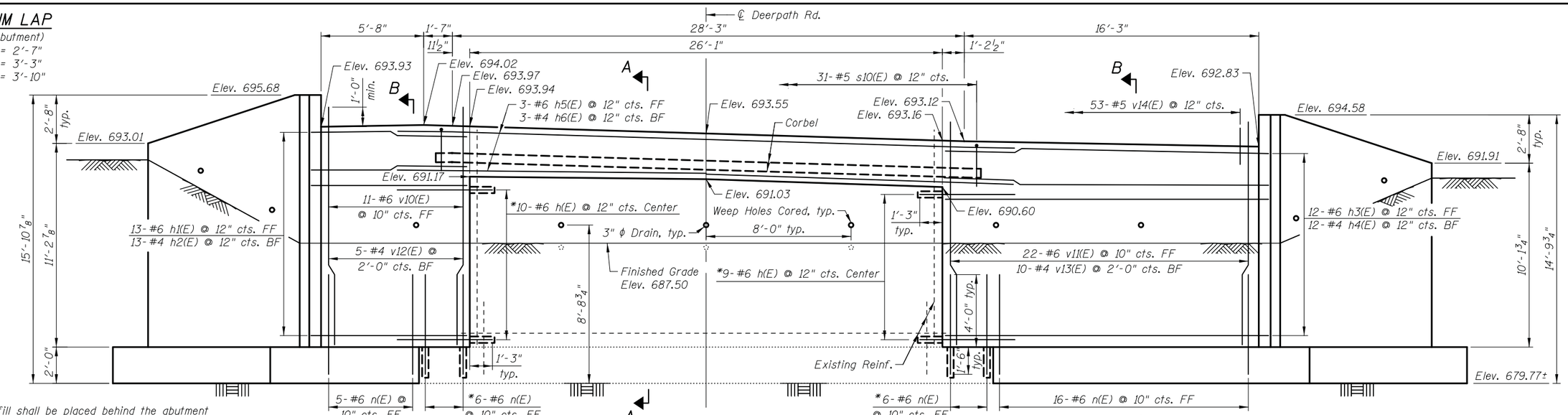

Notes:

Backfill shall be placed behind the abutment after the superstructure has been poured and the falsework removed. See Article 502.10 of the Standard Specifications.

For Sections A-A, B-B, C-C, & F-F, and Views D-D & E-E, see sheet S13.

For Detail A and Joint Detail, see sheet S13.

For Bar Diagrams, Field Cutting Diagram, and Bill of Material, see sheet S13.

ELEVATION

* Core and set #6 h(E), #6 n(E), #5 t12(E), #5 t13(E), and #5 w13(E) bars according to Article 509.06 of the standard specifications. Core holes shall be roughened or scored per manufacturer's recommendations. Cost included with Reinforcement Bars, Epoxy Coated.

** See Field Cutting Diagram

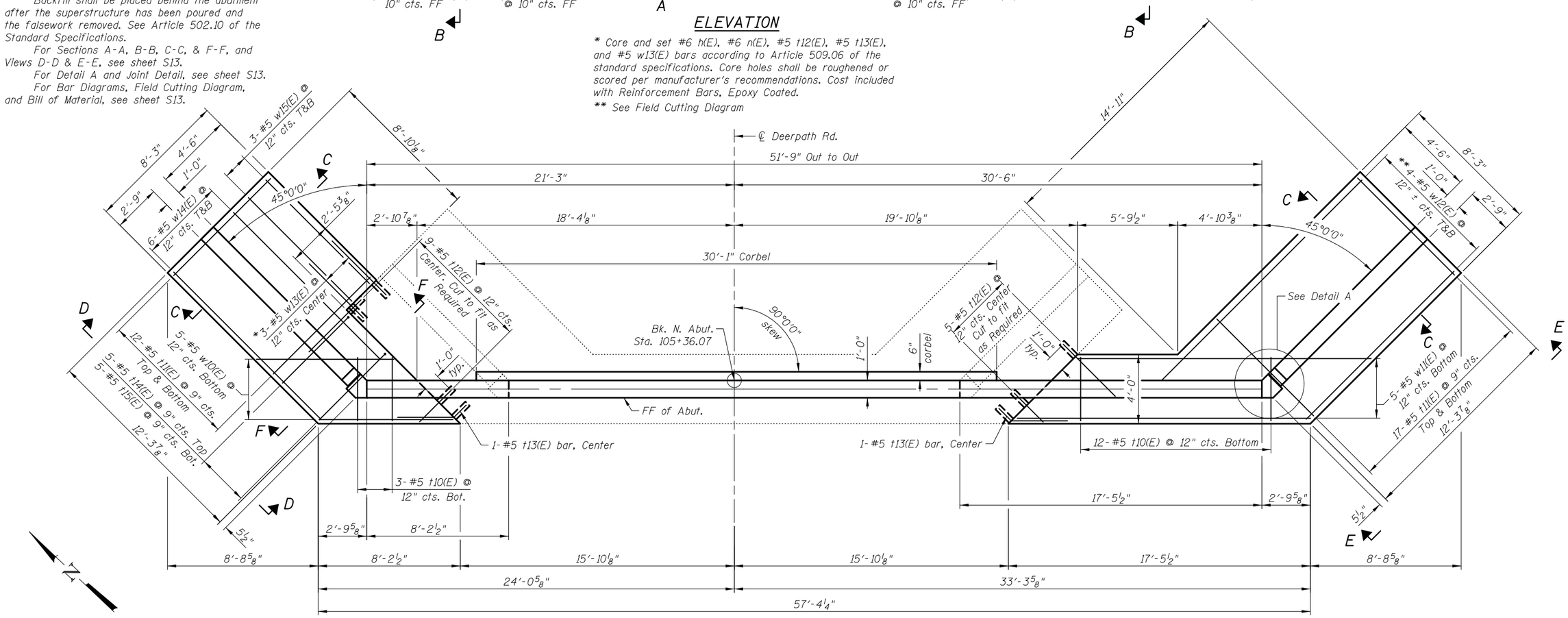

PLAN

CIVILTECH
450 E Devon Ave, Suite 300
Itasca, Illinois 60143
Tel: 630.773.3900 Fax: 630.773.3975
www.civiltechinc.com

DRAWN	K. KOMPARE	REVISED	-
DESIGNED	M. LANGE	REVISED	-
CHECKED	G. HATLESTAD	REVISED	-
DATE	10/12/15	REVISED	-

STATE OF ILLINOIS
DEPARTMENT OF TRANSPORTATION

NORTH ABUTMENT
DEERPATH ROAD OVER MILL CREEK
STRUCTURE NO. 045-3095

SHEET NO. S11 OF S15 SHEETS

F.A.U. RTE.	SECTION	COUNTY	TOTAL SHEETS	SHEET NO.
2327	07-00068-00-BR	KANE	78	49

CONTRACT NO. 61A88

ILLINOIS FED. AID PROJECT

mjp 10/9/2015 1:29:43 PM c:\pw_working\civiltech_production\mjp\dms02554\IL North Abutment.rl.dgn

MINIMUM LAP
(South Abutment)
#4 bar = 2'-7"
#5 bar = 3'-3"
#6 bar = 3'-10"

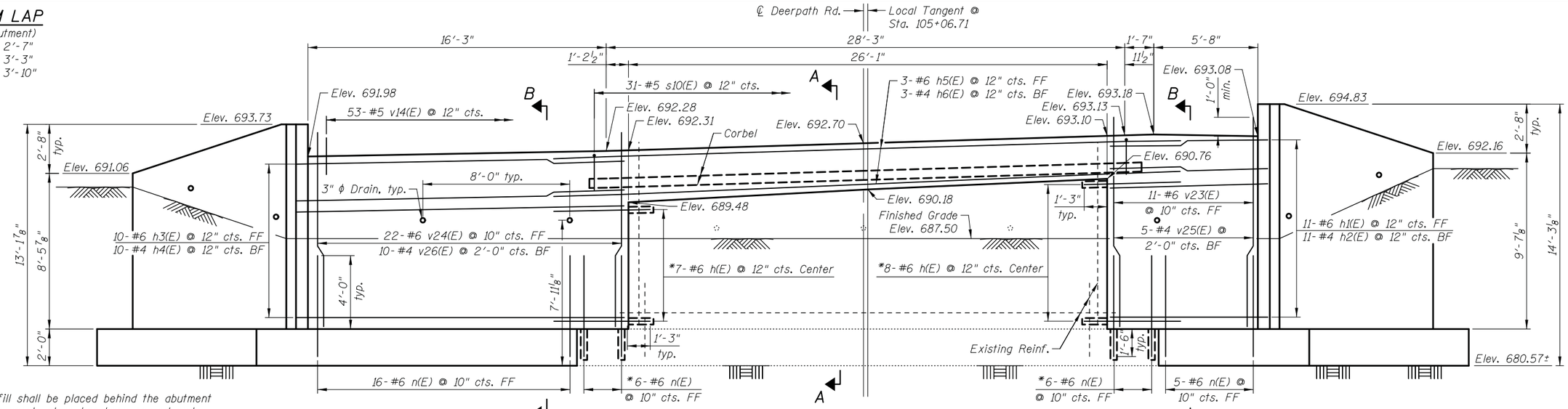

Notes:

Backfill shall be placed behind the abutment after the superstructure has been poured and the falsework removed. See Article 502.10 of the Standard Specifications.

For Sections A-A, B-B, C-C, & F-F, and Views G-G & H-H, see sheet S13.

For Detail A and Joint Detail, see sheet S13.

For Bar Diagrams, Field Cutting Diagram, and Bill of Material, see sheet S13.

ELEVATION

* Core and set #6 h(E), #6 n(E), #5 t12(E), #5 t13(E), and #5 w13(E) bars according to Article 509.06 of the standard specifications. Core holes shall be roughened or scored per manufacturer's recommendations. Cost included with Reinforcement Bars, Epoxy Coated.

** See Field Cutting Diagram

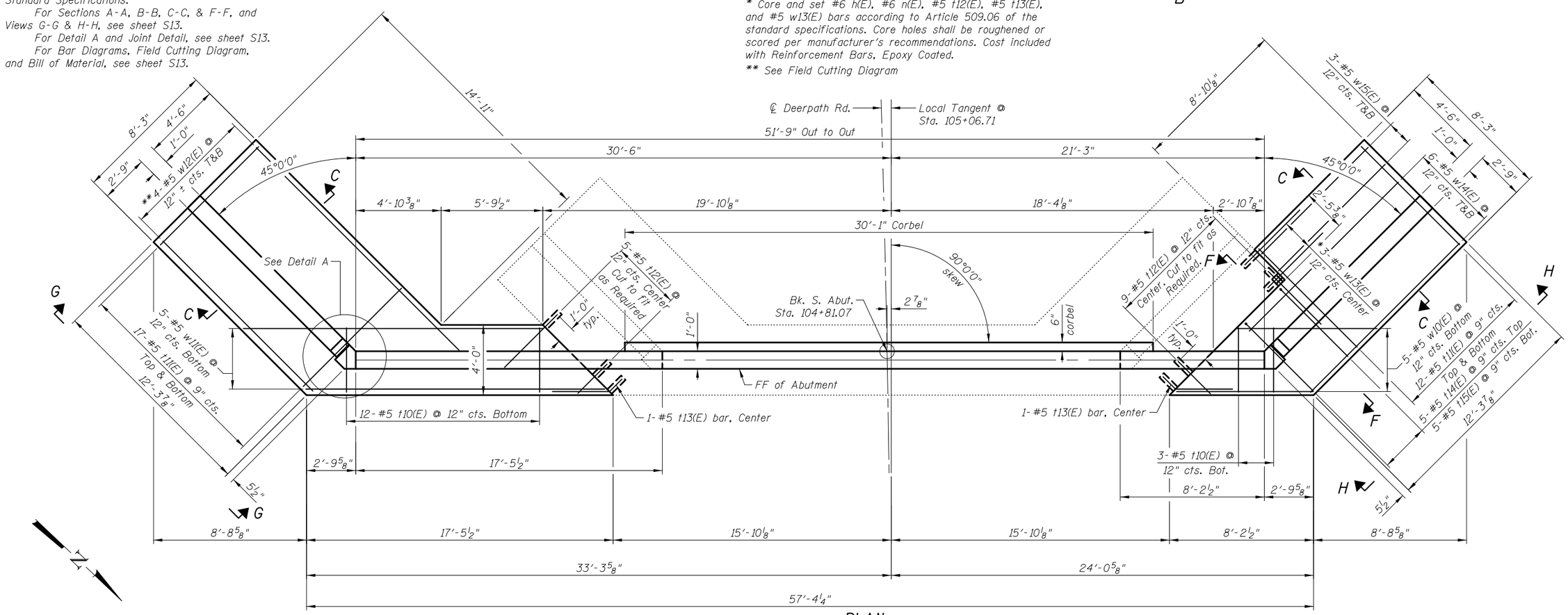

PLAN

CIVILTECH 450 E Devon Ave, Suite 300 Itasca, Illinois 60143 Tel: 630.773.3900 Fax: 630.773.3975 www.civiltechinc.com	DRAWN - K. KOMPARE DESIGNED - M. LANGE CHECKED - G. HATLESTAD DATE - 10/12/15	REVISED - REVISED - REVISED - REVISED -	**STATE OF ILLINOIS** **DEPARTMENT OF TRANSPORTATION**

SOUTH ABUTMENT
DEERPATH ROAD OVER MILL CREEK
STRUCTURE NO. 045-3095
SHEET NO. S12 OF S15 SHEETS

F.A.U. RTE.	SECTION	COUNTY	TOTAL SHEETS	SHEET NO.
2327	07-00068-00-BR	KANE	78	50

CONTRACT NO. 61A88
ILLINOIS FED. AID PROJECT

c:\pw_working\civiltech_production\mjp\dms02554\S2_South Abutment_r1.dgn
1:29:47 PM
mjp
10/9/2015

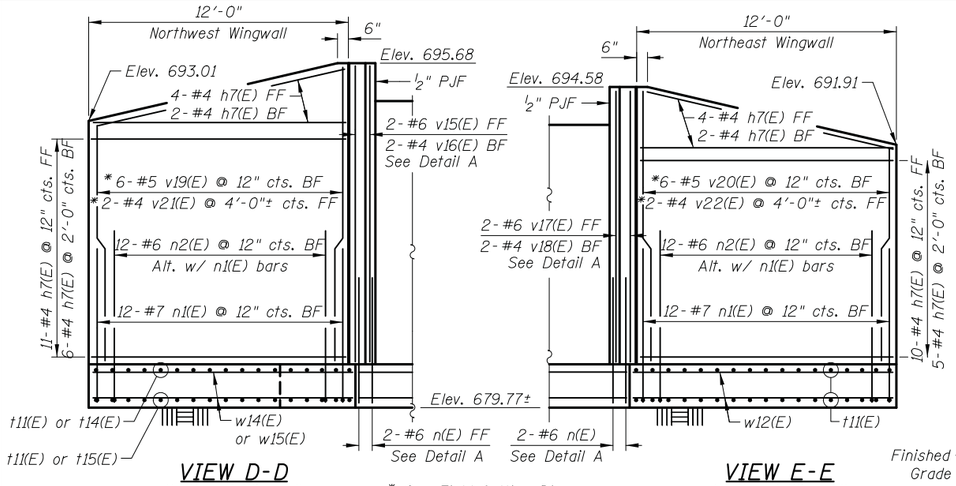

VIEW D-D
Northwest Wingwall

* See Field Cutting Diagram

VIEW E-E
Northeast Wingwall

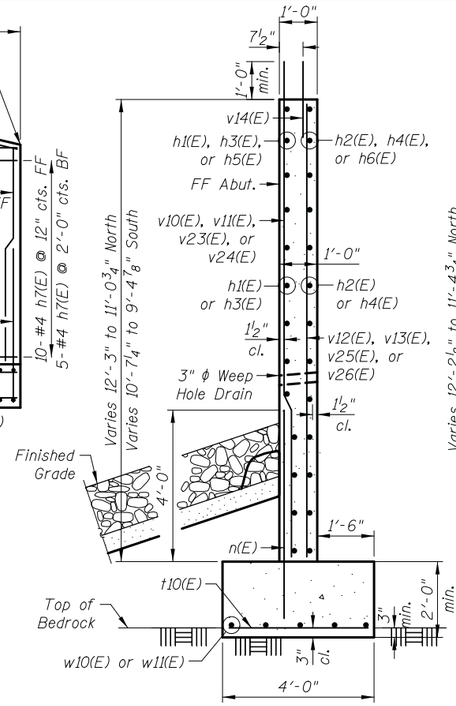

SECTION B-B

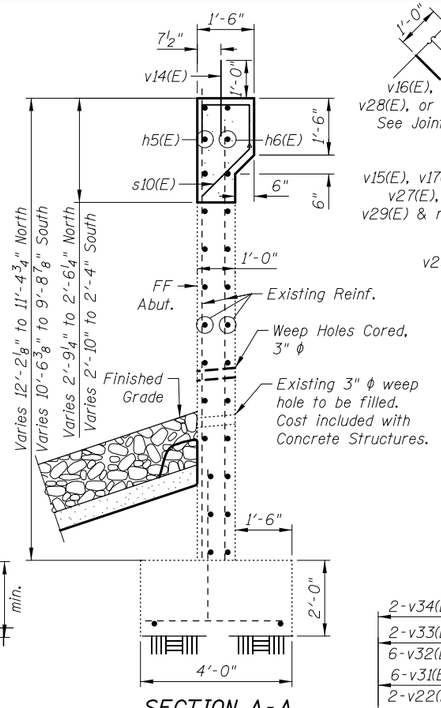

SECTION A-A

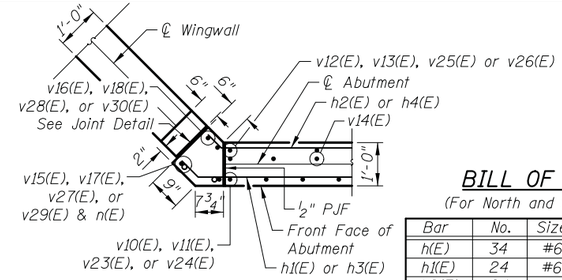

DETAIL A

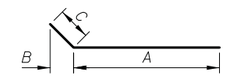

BARS h1(E) THRU h4(E) AND t13(E)

Bar	A	B	C
h1(E)	8'-8"	4 1/4"	6"
h2(E)	8'-1"	3 1/2"	5"
h3(E)	17'-11"	4 1/4"	6"
h4(E)	17'-4"	3 1/2"	5"
t13(E)	3'-3"	8 1/2"	1'-0"

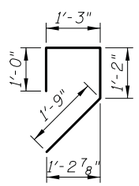

BAR s10(E)

MINIMUM LAP
(Wingwalls)
#7 bar = 5'-2"

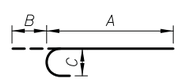

BARS n1(E), n2(E) AND t14(E)

Bar	A	B	C
n1(E)	7'-1"	10"	7"
n2(E)	7'-11"	8"	6"
t14(E)	5'-6"	7"	5"

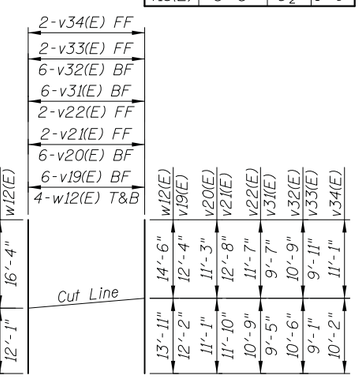

FIELD CUTTING DIAGRAM

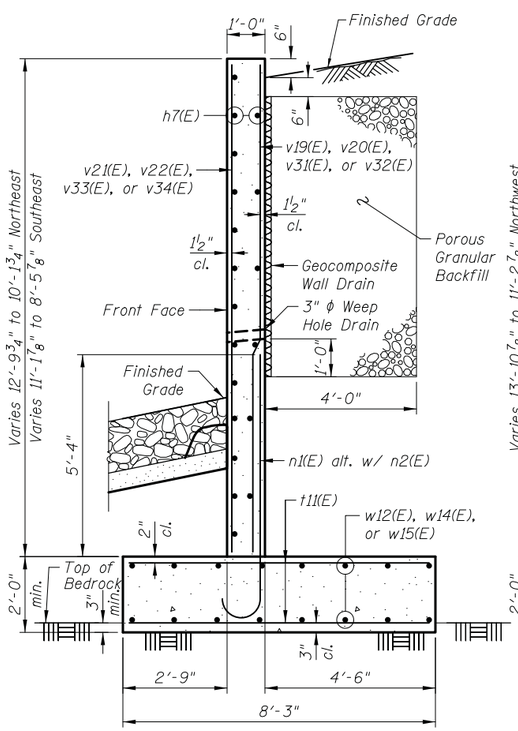

SECTION C-C

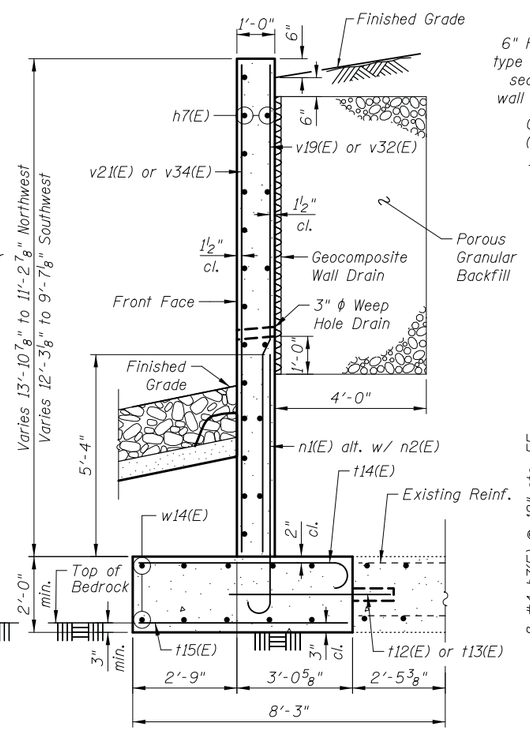

SECTION F-F

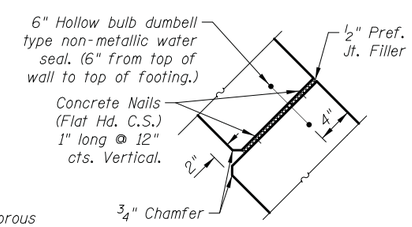

JOINT DETAIL

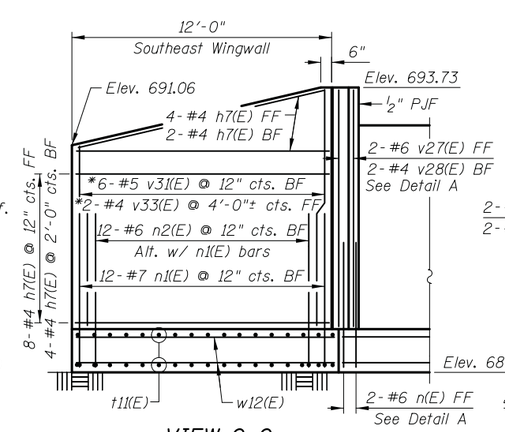

VIEW G-G
Southeast Wingwall

* See Field Cutting Diagram

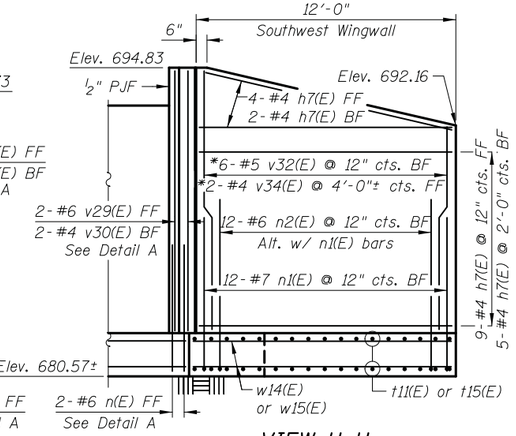

VIEW H-H
Southwest Wingwall

BILL OF MATERIAL
(For North and South Abutments)

Bar	No.	Size	Length	Shape
h(E)	34	#6	5'-3"	
h1(E)	24	#6	9'-2"	
h2(E)	24	#4	8'-6"	
h3(E)	22	#6	18'-5"	
h4(E)	22	#4	17'-9"	
h5(E)	6	#6	34-1"	
h6(E)	6	#4	31'-7"	
h7(E)	82	#4	11'-8"	
n(E)	74	#6	5'-6"	
n1(E)	48	#7	7'-11"	
n2(E)	48	#6	8'-7"	
s10(E)	62	#5	5'-2"	
t10(E)	30	#5	3'-8"	
t11(E)	116	#5	7'-11"	
t12(E)	28	#5	4'-3"	
t13(E)	4	#5	4'-3"	
t14(E)	10	#5	6'-1"	
t15(E)	10	#5	5'-6"	
v10(E)	11	#6	13'-1"	
v11(E)	22	#6	12'-3"	
v12(E)	5	#4	11'-11"	
v13(E)	10	#4	11'-2"	
v14(E)	106	#5	2'-0"	
v15(E)	2	#6	13'-8"	
v16(E)	2	#4	13'-8"	
v17(E)	2	#6	12'-6"	
v18(E)	2	#4	12'-6"	
v19(E)	6	#5	24'-6"	
v20(E)	6	#5	22'-4"	
v21(E)	2	#4	24'-6"	
v22(E)	2	#4	22'-4"	
v23(E)	11	#6	11'-5"	
v24(E)	22	#6	10'-7"	
v25(E)	5	#4	10'-3"	
v26(E)	10	#4	9'-6"	
v27(E)	2	#6	10'-11"	
v28(E)	2	#4	10'-11"	
v29(E)	2	#6	12'-0"	
v30(E)	2	#4	12'-0"	
v31(E)	6	#5	19'-0"	
v32(E)	6	#5	21'-3"	
v33(E)	2	#4	19'-0"	
v34(E)	2	#4	21'-3"	
w10(E)	10	#5	7'-10"	
w11(E)	10	#5	17'-1"	
w12(E)	16	#5	28'-5"	
w13(E)	6	#5	4'-5"	
w14(E)	24	#5	12'-0"	
w15(E)	12	#5	8'-6"	

Item	Unit	Quantity
Porous Granular Backfill	Cu. Yd.	101
Rock Excavation for Structures	Cu. Yd.	5
Concrete Structures	Cu. Yd.	88.9
Reinforcement Bars, Epoxy Coated	Pound	9,990
Geocomposite Wall Drain	Sq. Yd.	81

Note:
See sheets S11 and S12 for section locations.

CIVILTECH
450 E Devon Ave, Suite 300
Itasca, Illinois 60143
Tel: 630.773.3900 Fax: 630.773.3975
www.civiltechinc.com

DRAWN - K. KOMPARE	REVISED -		
DESIGNED - M. LANGE	REVISED -		
CHECKED - G. HATLESTAD	REVISED -		
DATE - 10/12/15	REVISED -		

STATE OF ILLINOIS
DEPARTMENT OF TRANSPORTATION

ABUTMENT DETAILS
DEERPATH ROAD OVER MILL CREEK
STRUCTURE NO. 045-3095
SHEET NO. S13 OF S15 SHEETS

F.A.U. RTE.	SECTION	COUNTY	TOTAL SHEETS	SHEET NO.
2327	07-00068-00-BR	KANE	78	51

CONTRACT NO. 61A88
ILLINOIS FED. AID PROJECT

c:\pw_working\civiltech_production\mjp\dms0254\S3_Abutment Details.dgn
1:29:51 PM
mjp
10/9/2015

MINIMUM LAP
(Pier)
#5 bar = 3'-3"

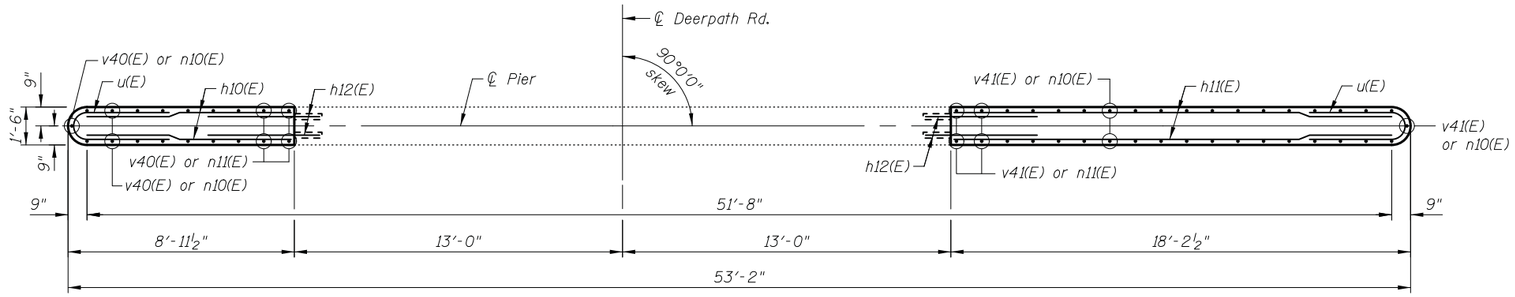

TOP PLAN

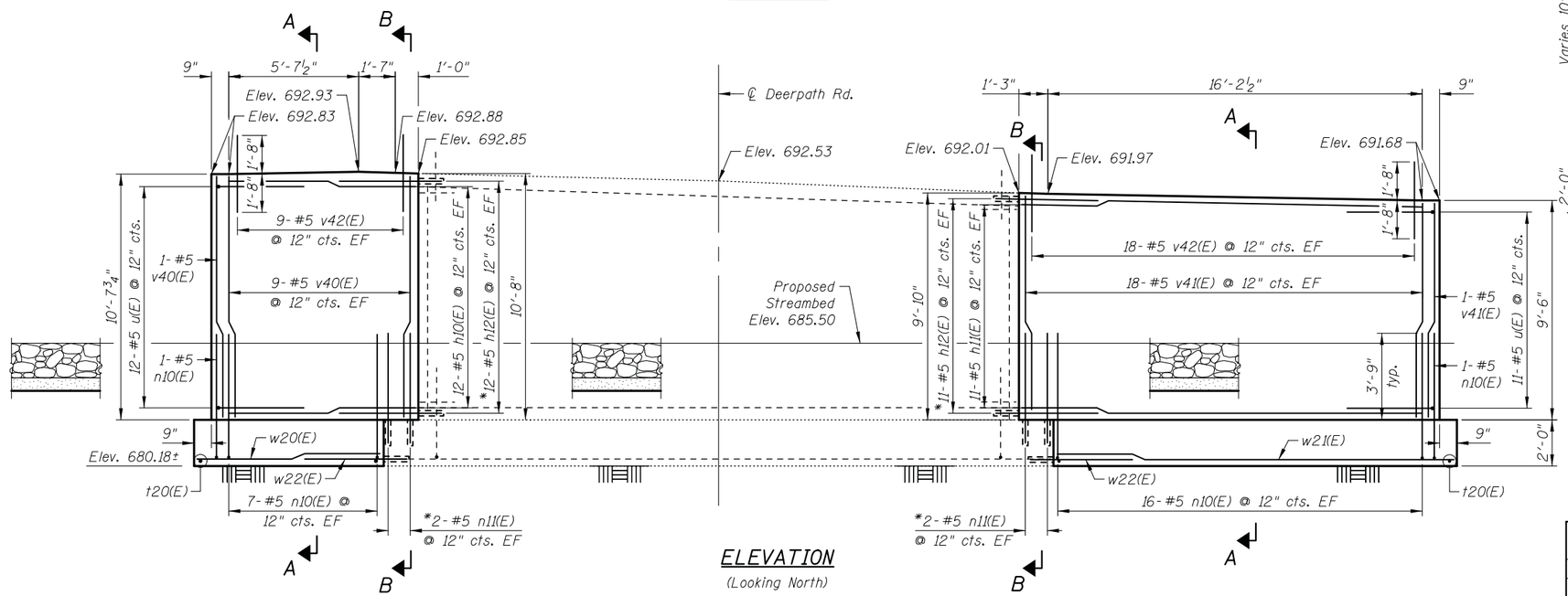

ELEVATION
(Looking North)

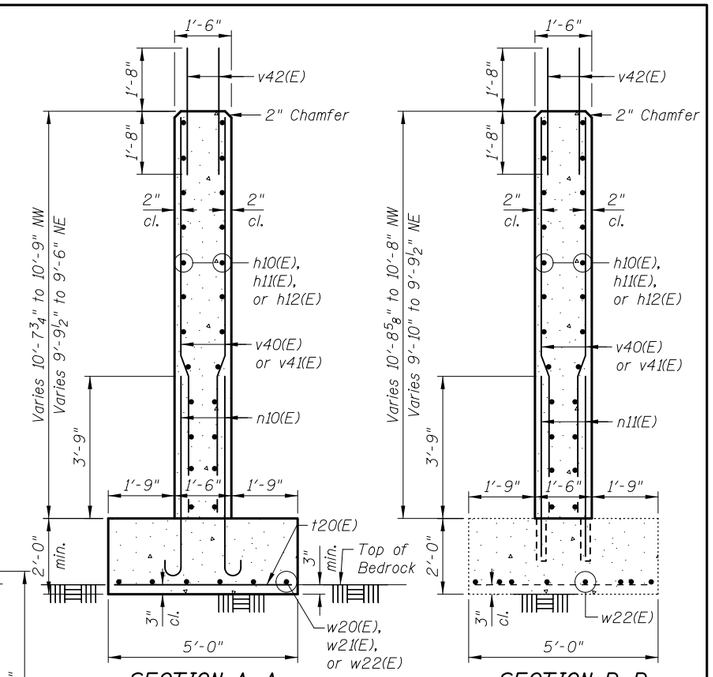

SECTION A-A

SECTION B-B

BILL OF MATERIAL

Bar	No.	Size	Length	Shape
h10(E)	24	#5	8'-1"	
h11(E)	22	#5	17'-4"	
h12(E)	46	#5	4'-5"	
n10(E)	48	#5	6'-1"	
n11(E)	8	#5	4'-9"	
t20(E)	27	#5	4'-8"	
u(E)	23	#5	8'-2"	
v40(E)	18	#5	10'-5"	
v41(E)	36	#5	9'-3"	
v42(E)	54	#5	3'-4"	
w20(E)	6	#5	7'-11"	
w21(E)	6	#5	17'-2"	
w22(E)	12	#5	4'-5"	

Item	Unit	Quantity
Rock Excavation for Structures	Cu. Yd.	2
Concrete Structures	Cu. Yd.	24.4
Reinforcement Bars, Epoxy Coated	Pound	2,430

Bar	Drill & Grout Length
h12(E)	1'-0"
n11(E)	1'-0"
w22(E)	1'-0"

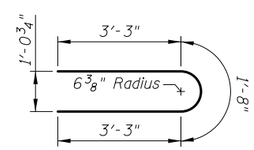

Bar u(E)

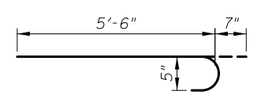

Bar n10(E)

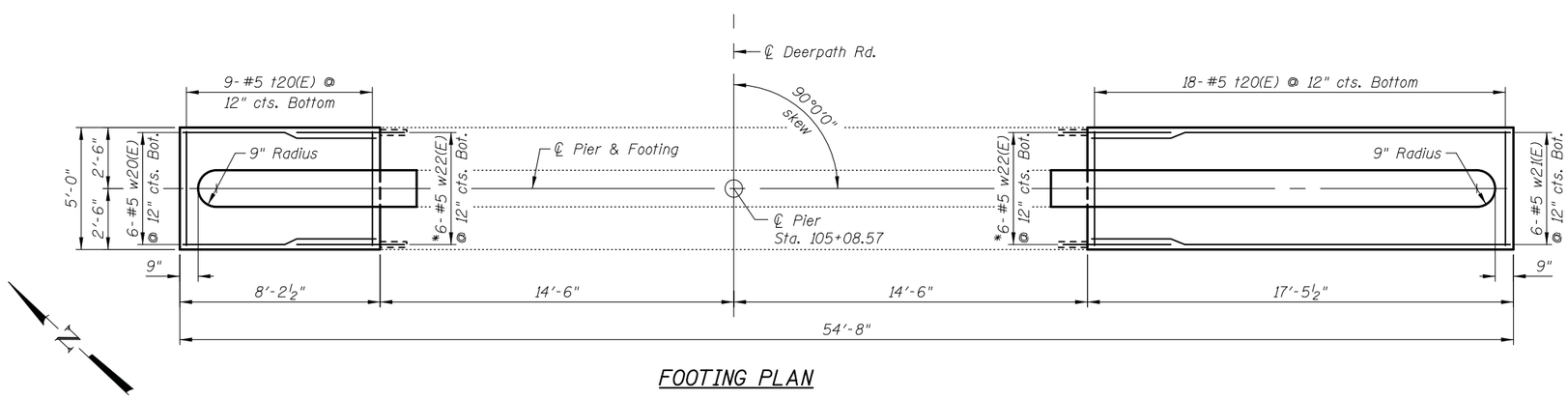

FOOTING PLAN

* Core and set #5 n11(E) and #5 w22(E) bars according to Article 509.06 of the standard specifications. Core holes shall be roughened or scored per manufacturer's recommendations.

CIVILTECH
450 E Devon Ave, Suite 300
Itasca, Illinois 60143
Tel: 630.773.3900 Fax: 630.773.3975
www.civiltechinc.com

DRAWN	K. KOMPARE	REVISED	-
DESIGNED	M. LANGE	REVISED	-
CHECKED	G. HATLESTAD	REVISED	-
DATE	10/12/15	REVISED	-

STATE OF ILLINOIS
DEPARTMENT OF TRANSPORTATION

PIER
DEERPATH ROAD OVER MILL CREEK
STRUCTURE NO. 045-3095
SHEET NO. S14 OF S15 SHEETS

F.A.U. RTE.	SECTION	COUNTY	TOTAL SHEETS	SHEET NO.
2327	07-00068-00-BR	KANE	78	52

CONTRACT NO. 61A88
ILLINOIS FED. AID PROJECT

mjp 10/9/2015 1:29:54 PM c:\pw_working\civiltech_production\mjp\dms62554\14_Pier.dgn

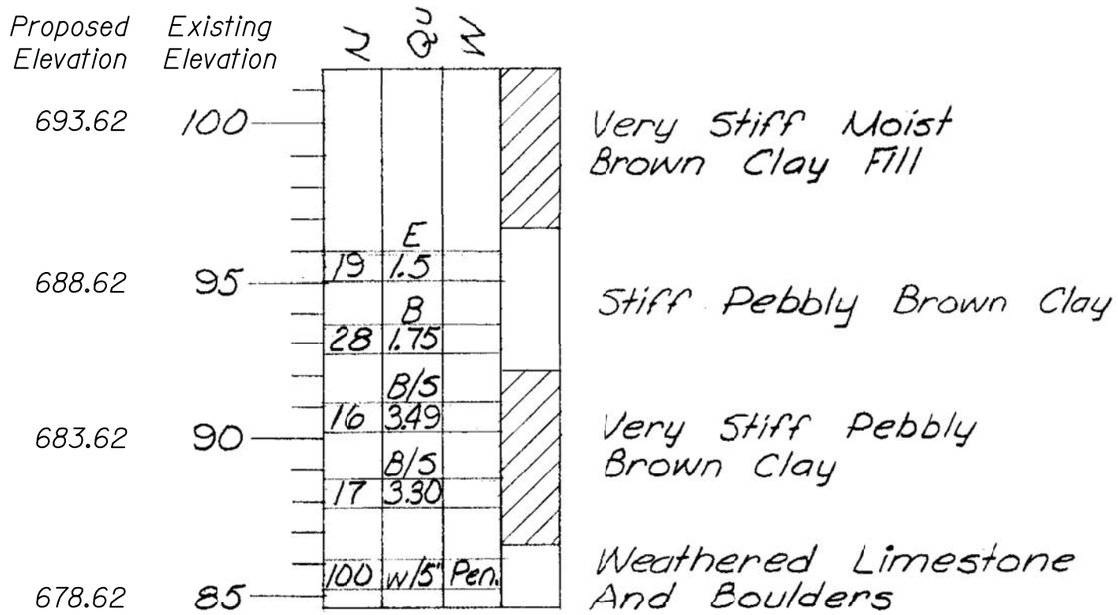

BORING NO. 1

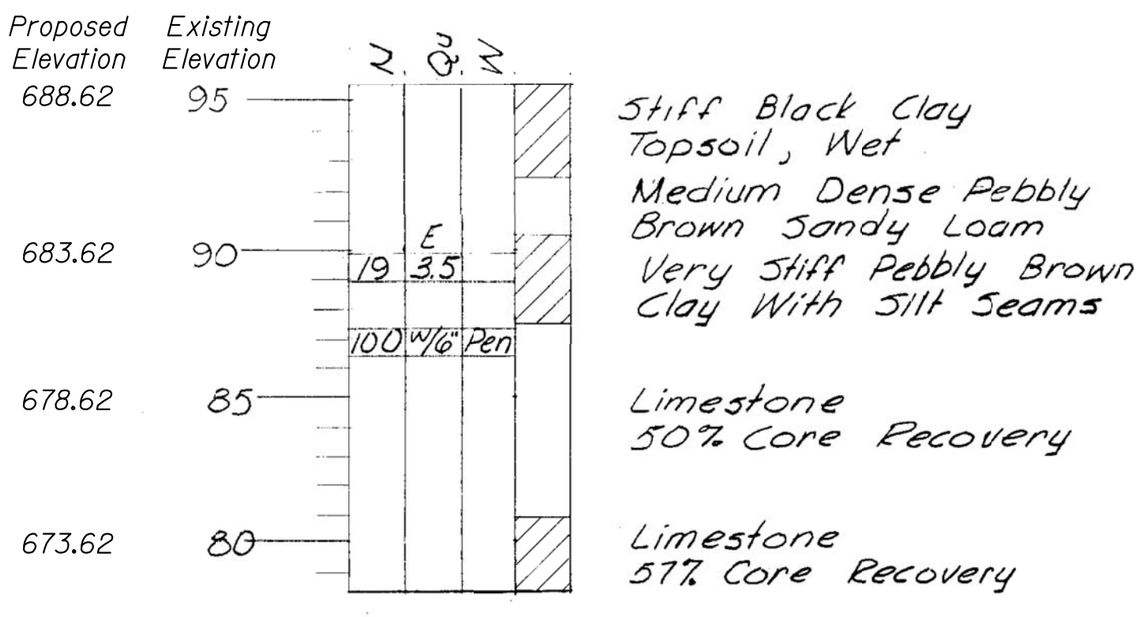

BORING NO. 2

N - Standard Penetration Test - Blows per foot to drive 2" O.D. split spoon sampler 12" with 140 lb. hammer falling 30"
Qu - Unconfined Compressive Strength t/sf
W - Water Content - percentage of oven dry weight
B - Bulge Failure
S - Shear Failure
E - Estimated Value

CIVILTECH
450 E Devon Ave, Suite 300
Itasca, Illinois 60143
Tel: 630.773.3900 Fax: 630.773.3975
www.civiltechinc.com

DRAWN - K. KOMPARE	REVISED -	STATE OF ILLINOIS DEPARTMENT OF TRANSPORTATION	BORING LOGS DEERPATH ROAD OVER MILL CREEK STRUCTURE NO. 045-3095
DESIGNED - M. LANGE	REVISED -		
CHECKED - G. HATLESTAD	REVISED -		
DATE - 10/12/15	REVISED -		SHEET NO. S15 OF S15 SHEETS

F.A.U. RTE.	SECTION	COUNTY	TOTAL SHEETS	SHEET NO.
2327	07-00068-00-BR	KANE	78	53
		CONTRACT NO. 61A88		
		ILLINOIS FED. AID PROJECT		

mjp 10/9/2015 1:29:57 PM c:\pw_working\civiltech_production\mjp\dms02554\15_Boring Logs.dgn

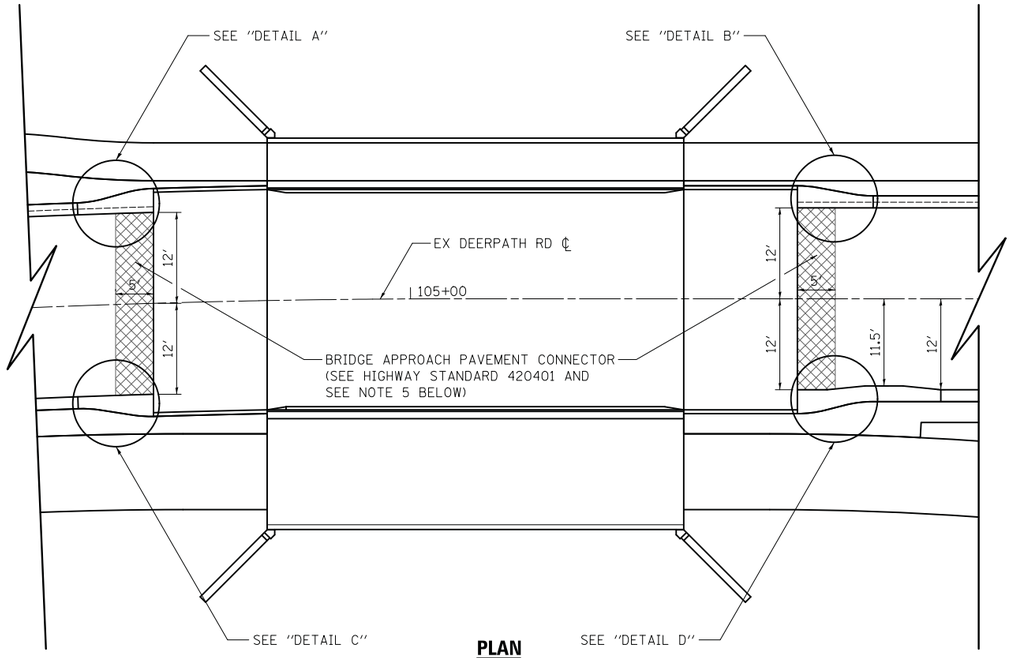

PLAN

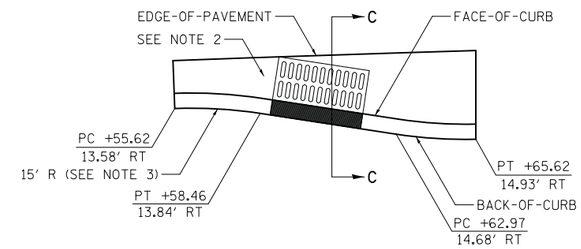

DETAIL C

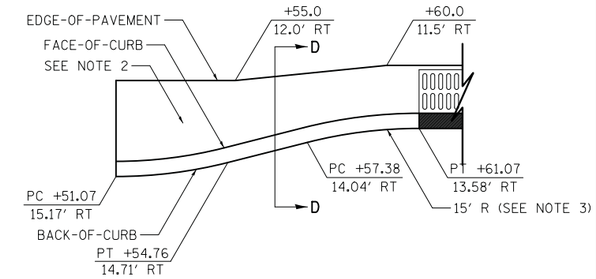

DETAIL D

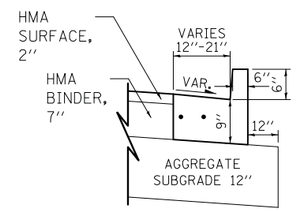

SECTION C–C (FIRST 5')

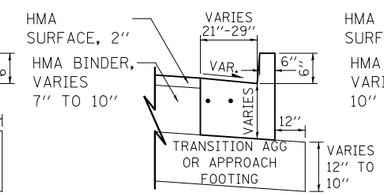

SECTION C–C (LAST 5')

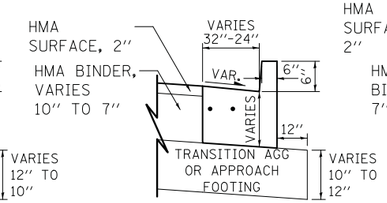

SECTION D–D (FIRST 5')

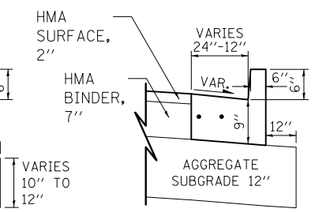

SECTION D–D (LAST 5')

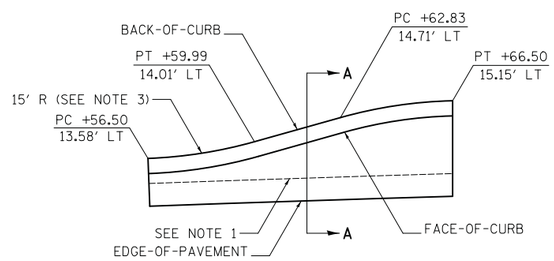

DETAIL A

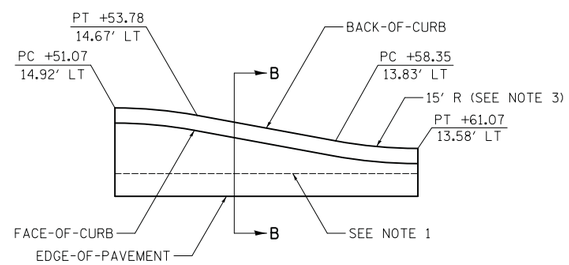

DETAIL B

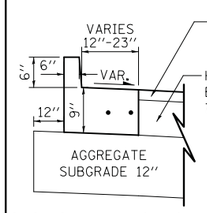

SECTION A–A (FIRST 5')

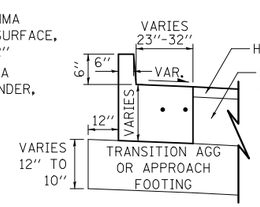

SECTION A–A (LAST 5')

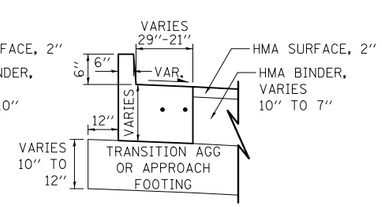

SECTION B–B (FIRST 5')

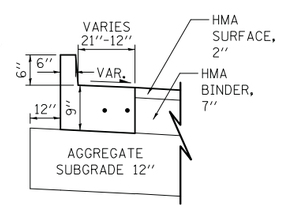

SECTION B–B (LAST 5')

CURB AND GUTTER TRANSITION & PAVEMENT TRANSITION DETAILS AT BRIDGE APPROACH SLAB

NOTES

1. TRANSITION PITCHED OUT GUTTER SLOPE FROM 2% TO MATCH THE SLOPE OF BRIDGE APPROACH SLAB AT 3%.
2. TRANSITION PITCHED IN GUTTER SLOPE FROM 6% TO MATCH THE SLOPE OF BRIDGE APPROACH SLAB AT 3%.
3. ALL BACK-OF-CURB CURVES ARE AT A RADIUS OF 15'.
4. ALL CURB AND GUTTER TRANSITIONS SHALL BE PAID FOR AS "COMBINATION CONCRETE CURB AND GUTTER, TYPE B-6.12 (MODIFIED)".
5. THE AREA OF THE BRIDGE APPROACH PAVEMENT CONNECTOR HAS BEEN DEFINED IN THE PLAN DETAIL ABOVE AND SHALL BE PAID FOR AS "BRIDGE APPROACH PAVEMENT CONNECTOR (FLEXIBLE)". THE CONSTRUCTION OF ROADWAY PAVEMENT AREAS BEYOND THE BRIDGE APPROACH PAVEMENT CONNECTOR SHALL BE DONE ACCORDING TO THE ROADWAY PLANS.

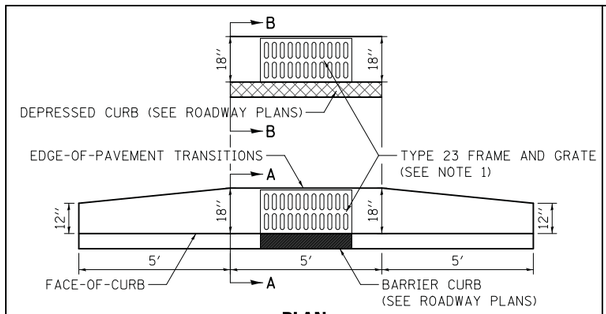

PLAN

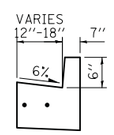

SECTION A–A

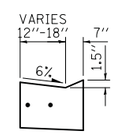

SECTION B–B

CURB AND GUTTER TRANSITION DETAIL FOR TYPE 23 FRAME AND GRATE

NOTES

1. FOR BARRIER CURB, USE EAST JORDAN #7220. FOR DEPRESSED CURB, USE EAST JORDAN #7464.
2. ALL CURB AND GUTTER TRANSITIONS SHALL BE PAID FOR AS "COMBINATION CONCRETE CURB AND GUTTER, TYPE B-6.12 (MODIFIED)".

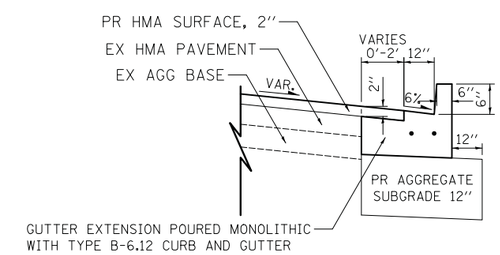

COMBINATION CONCRETE CURB AND GUTTER, TYPE B-6.12 (MODIFIED) DETAIL

NOTES

1. THE MODIFIED CURB AND GUTTER APPLIES ONLY TO THE RESURFACING PAVEMENT SECTION AND SHALL BE PAID FOR AS "COMBINATION CONCRETE CURB AND GUTTER, TYPE B-6.12 (MODIFIED)".

PLOT DRIVER = ...\mjp\dms80314\cet.pdf.plt
PEN TABLE = ...\pentbl\cet.idot.ppdu.tbl
FILE NAME = ...\2637-sht-details01.dgn

CIVILTECH

USER NAME = mjp	DESIGNED - MJP	REVISED -	
	DRAWN - MJP	REVISED -	
PLOT SCALE = 10.0000 ' / in.	CHECKED - DNM	REVISED -	
PLOT DATE = 10/10/2015	DATE - 10/12/15	REVISED -	

STATE OF ILLINOIS
DEPARTMENT OF TRANSPORTATION

DEERPATH ROAD OVER MILL CREEK
CONSTRUCTION DETAILS

SCALE: N.T.S. | SHEET OF SHEETS | STA. TO STA.

F.A.U. RTE.	SECTION	COUNTY	TOTAL SHEETS	SHEET NO.
2327	07-00068-00-BR	KANE	78	54

CONTRACT NO. 61A88

ILLINOIS FED. AID PROJECT

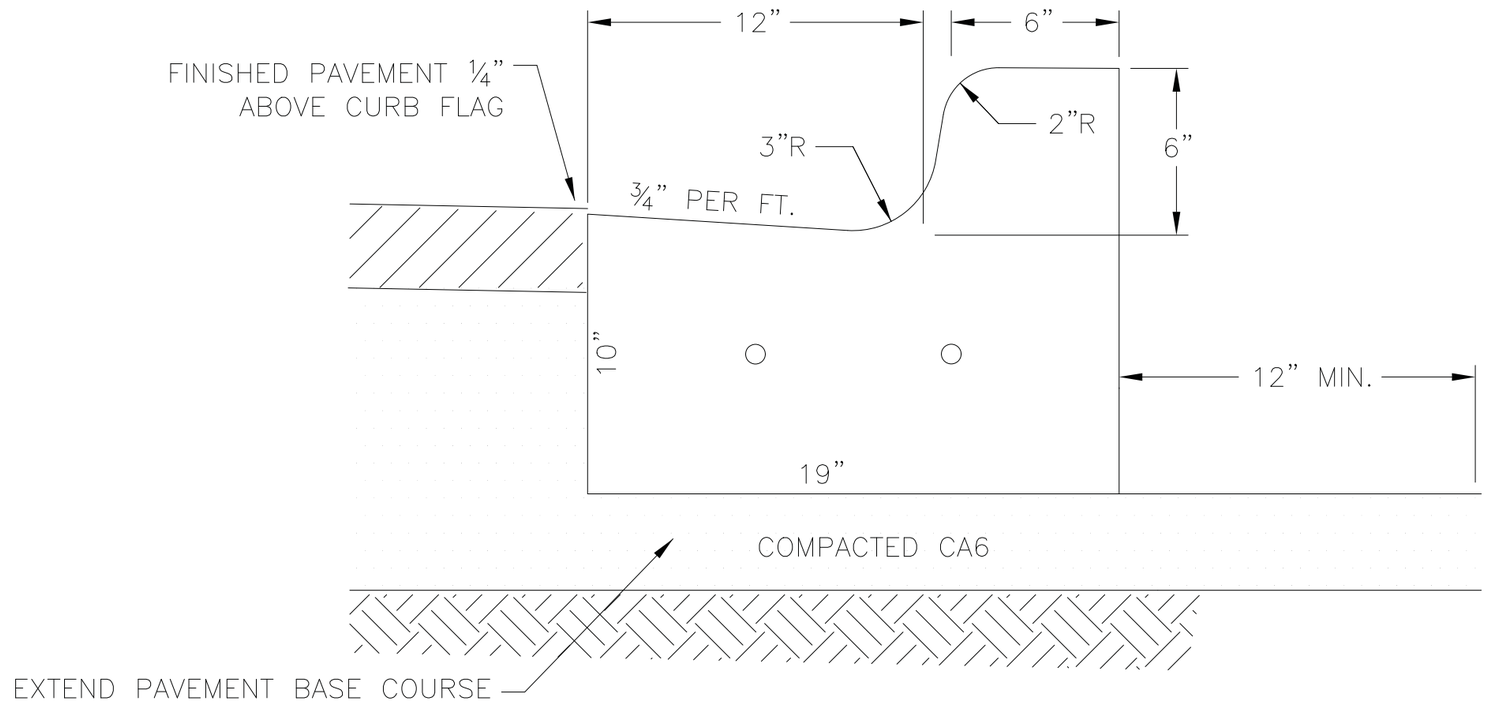

EXTEND PAVEMENT BASE COURSE TO PROVIDE A MINIMUM 6" LAYER OF COMPACTED CA6 UNDER CURB AND 12" BACK OF CURB.

NOTE:

1. 2 – NO. 5 REBARS CONTINUOUS AND 2–¾" DOWEL BARS WITH GREASE CAPS AT EACH EXPANSION JOINT.
2. PLACE ¾" EXPANSION JOINTS AT 100' INTERVALS, 5'– 10' EITHER SIDE OF STRUCTURES, P.C.'S AND RADIUS POINTS.
3. SAW CONTRACTION JOINTS EVERY 10' BETWEEN EXPANSIONS TO THE DEPTH OF 3" WITHIN 24 HOURS OF PLACEMENT.

REVISIONS		
NAME	BY	DATE

CURB AND GUTTER DETAIL

ST_CGSTD

CITY OF BATAVIA
ENGINEERING & PUBLIC WORKS DEPARTMENTS
DATE:
DESIGNED BY: AMP CHECKED BY: NAB

CIVILTECH

USER NAME = mjp	DESIGNED - MJP	REVISED -
	DRAWN - MJP	REVISED -
PLOT SCALE = 1.0000 ' / in.	CHECKED - DNM	REVISED -
PLOT DATE = 10/10/2015	DATE - 10/12/15	REVISED -

STATE OF ILLINOIS
DEPARTMENT OF TRANSPORTATION

DEERPATH ROAD OVER MILL CREEK
CONSTRUCTION DETAILS

SCALE: N.T.S. SHEET OF SHEETS STA. TO STA.

F.A.U. RTE.	SECTION	COUNTY	TOTAL SHEETS	SHEET NO.
2327	07-00068-00-BR	KANE	78	55

CONTRACT NO. 61A88

ILLINOIS FED. AID PROJECT

PLOT DRIVER = ...\mjp\dms00314\ceu_pdf.plt
PEN TABLE = ...\pentbl\ceu_idot_general.tbl
FILE NAME = ...\2637-sht-details02.dgn

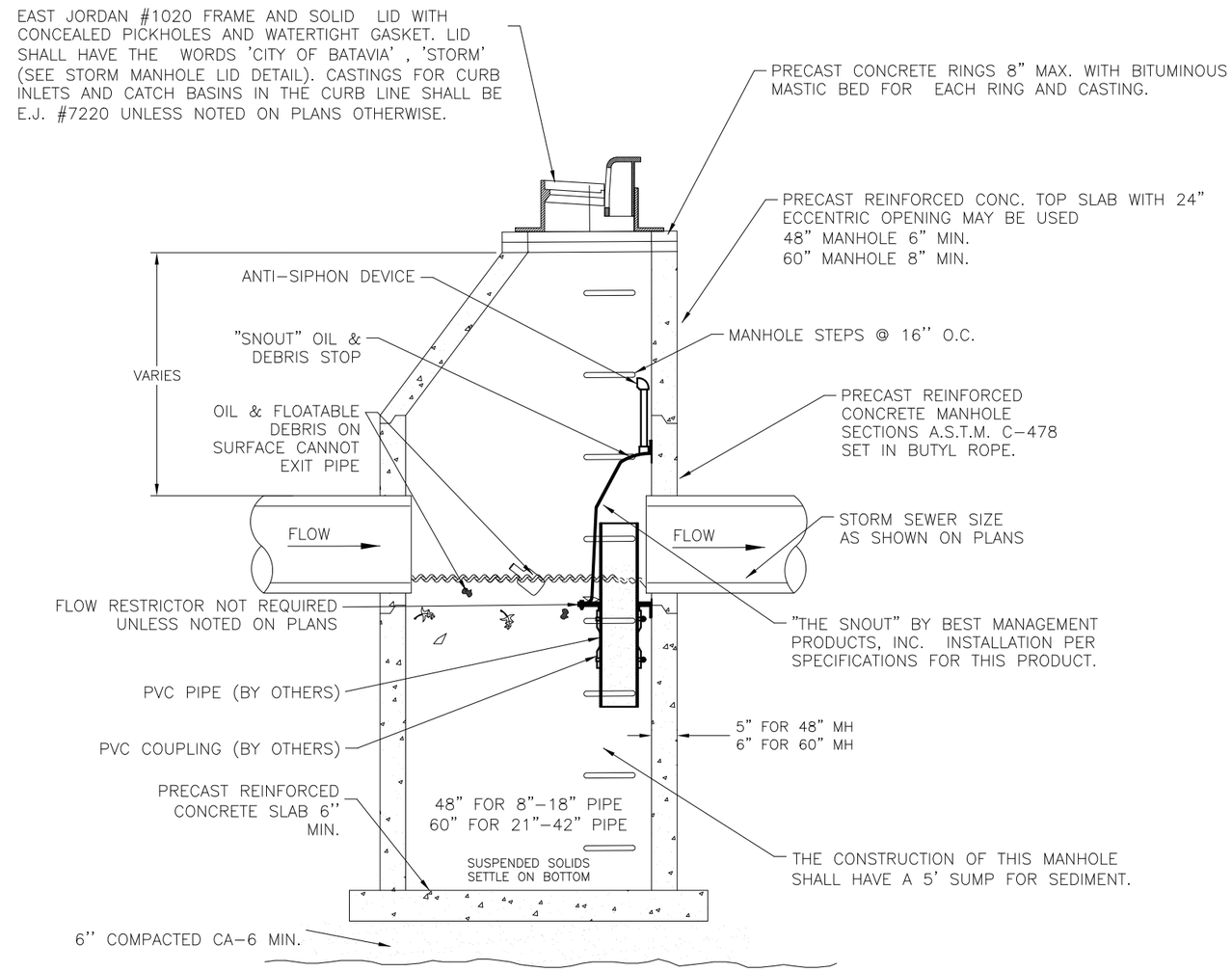

NOTE:

1. CATCH BASIN-GRIT OIL STOPS ON ALL STORM SEWERS 42'' AND SMALLER WITH "THE SNOUT" INSTALLED AS SHOWN ABOVE.
2. ALL STORM SEWERS SHALL BE R.C.P.
3. ALL LONE CURB INLETS SHALL BE CATCH BASIN-GRIT OIL STOPS AS WELL AS THE DOWNSTREAM OF EACH PAIR OF CURB INLETS.

BATAVIA Since 1833 CITY OF ENERGY

REVISIONS		
NAME	BY	DATE

CATCH BASIN-GRIT OIL STOP (SNOUT)

STM_CB SNOUT

CITY OF BATAVIA
ENGINEERING & PUBLIC WORKS DEPARTMENTS
DATE:
DESIGNED BY: AMP CHECKED BY: NAB

CIVILTECH

USER NAME = mjp	DESIGNED - MJP	REVISED -
	DRAWN - MJP	REVISED -
PLOT SCALE = 1.0000 ' / in.	CHECKED - DNM	REVISED -
PLOT DATE = 10/10/2015	DATE - 10/12/15	REVISED -

STATE OF ILLINOIS
DEPARTMENT OF TRANSPORTATION

DEERPATH ROAD OVER MILL CREEK
CONSTRUCTION DETAILS

SCALE: N.T.S. SHEET OF SHEETS STA. TO STA.

F.A.U. RTE.	SECTION	COUNTY	TOTAL SHEETS	SHEET NO.
2327	07-00068-00-BR	KANE	78	56

CONTRACT NO. 61A88

ILLINOIS FED. AID PROJECT

PLOT DRIVER = ...\mjp\dms60314\ce1.pdf.plt
PEN TABLE = ...\pentbl\ce1.idot.general.tbl
FILE NAME = ...\2637-sht-details03.dgn

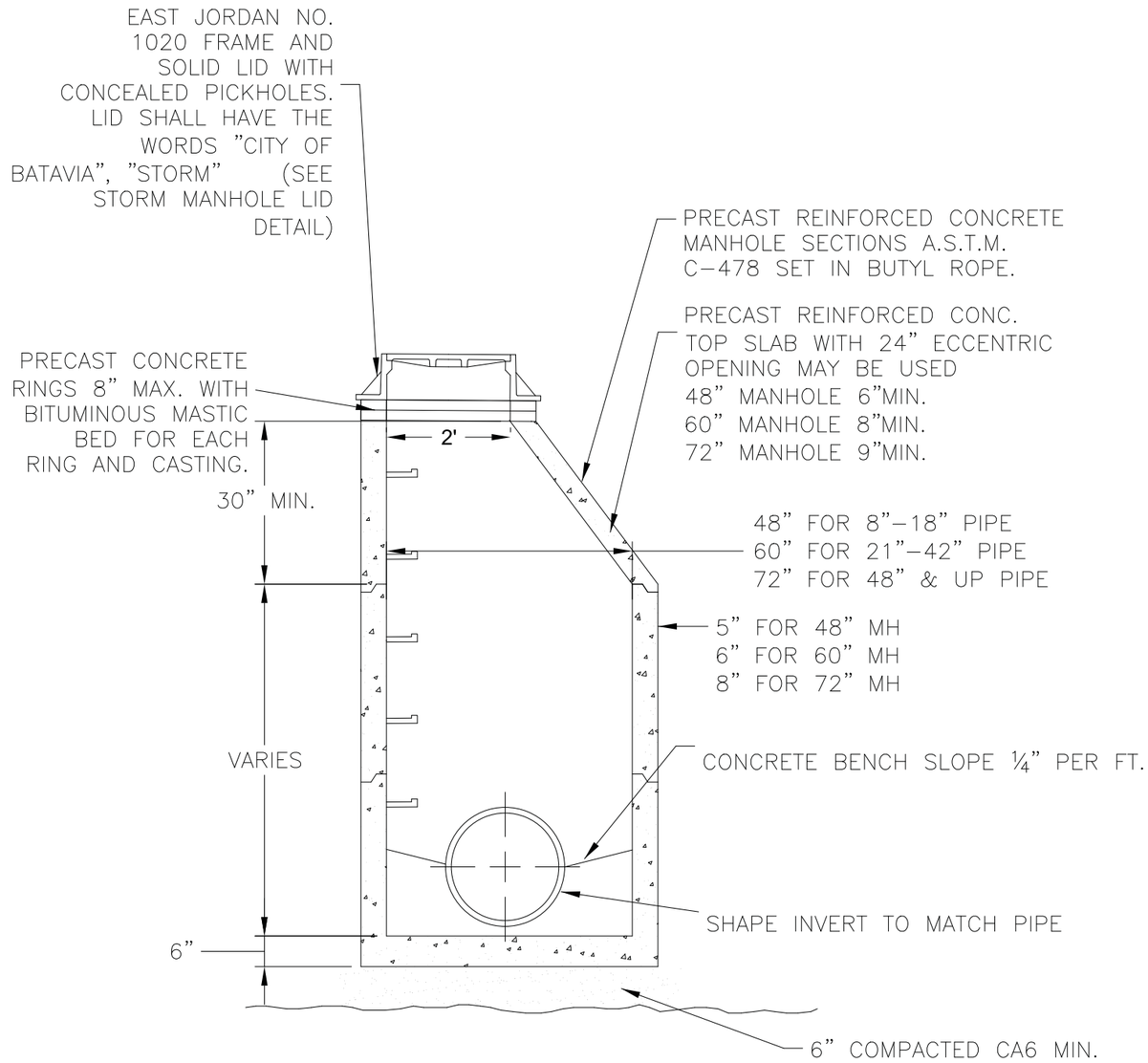

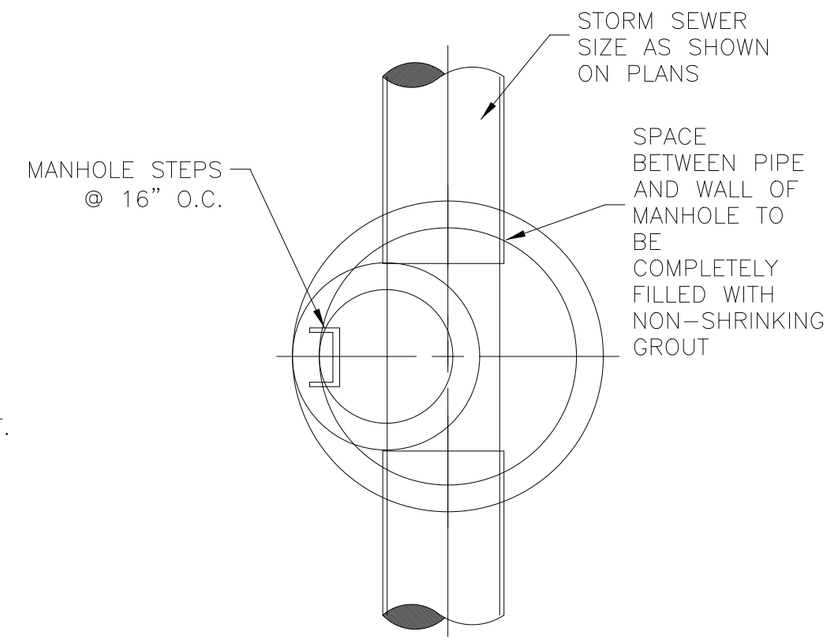

REVISIONS		
NAME	BY	DATE

STORM SEWER MANHOLE

STM_MH

CITY OF BATAVIA
ENGINEERING & PUBLIC WORKS DEPARTMENTS
DATE:
DESIGNED BY: AMP CHECKED BY: NAB

USER NAME = mjp	DESIGNED - MJP	REVISED -	
	DRAWN - MJP	REVISED -	
PLOT SCALE = 1.0000 ' / in.	CHECKED - DNM	REVISED -	
PLOT DATE = 10/10/2015	DATE - 10/12/15	REVISED -	

CIVILTECH

STATE OF ILLINOIS
DEPARTMENT OF TRANSPORTATION

DEERPATH ROAD OVER MILL CREEK
CONSTRUCTION DETAILS

SCALE: N.T.S. SHEET OF SHEETS STA. TO STA.

F.A.U. RTE.	SECTION	COUNTY	TOTAL SHEETS	SHEET NO.
2327	07-00068-00-BR	KANE	78	57

CONTRACT NO. 61A88

ILLINOIS FED. AID PROJECT

PLOT DRIVER = ...\mjp\dms@0314\ceu_pdf.plt
PEN TABLE = ...\pentbl\ceu.idot_general.tbl
FILE NAME = ...\2637-sht-details04.dgn

EAST JORDAN #1020 FRAME AND LID WITH CONSEALED PICKHOLES. LID SHALL HAVE THE WORDS "CITY OF BATAVIA", "STORM". CASTINGS FOR CURB INLETS AND CATCH BASINS IN THE CURB LINE SHALL BE E.J. #7220 UNLESS OTHERWISE NOTED

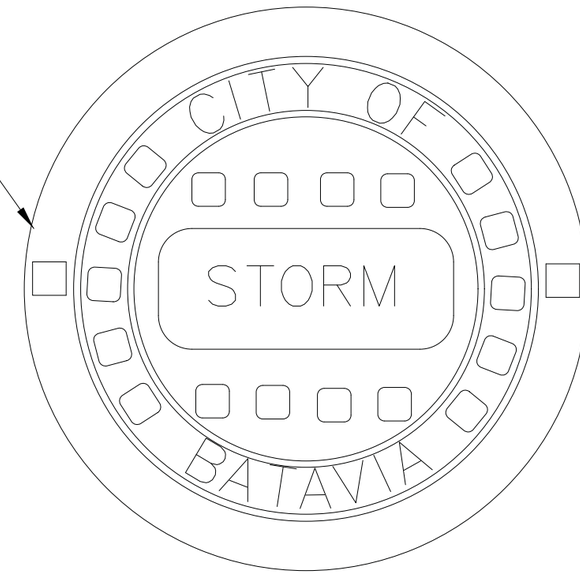

(2) CLOSED PICKHOLES

1-1/2 LETTERS
(RECESSED FLUSH)
HEAVY DUTY
MATERIAL ASTM A48 CL 35
COVER WT 125 LBS

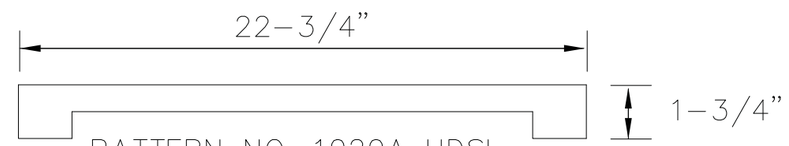

PATTERN NO. 1020A HDSI
PRODUCT NO. 1020 BATAVIA WATER
CATALOG NO. 1020A HDSI

REVISIONS		
NAME	BY	DATE

STORM MANHOLE LID DETAIL

STM_MH LID

CITY OF BATAVIA
ENGINEERING & PUBLIC WORKS DEPARTMENTS
DATE:
DESIGNED BY: AMP CHECKED BY: NAB

CIVILTECH

USER NAME = mjp	DESIGNED - MJP	REVISED -
	DRAWN - MJP	REVISED -
PLOT SCALE = 1.0000 ' / in.	CHECKED - DNM	REVISED -
PLOT DATE = 10/10/2015	DATE - 10/12/15	REVISED -

STATE OF ILLINOIS
DEPARTMENT OF TRANSPORTATION

DEERPATH ROAD OVER MILL CREEK
CONSTRUCTION DETAILS

SCALE: N.T.S. SHEET OF SHEETS STA. TO STA.

F.A.U. RTE.	SECTION	COUNTY	TOTAL SHEETS	SHEET NO.
2327	07-00068-00-BR	KANE	78	58

CONTRACT NO. 61A88

ILLINOIS FED. AID PROJECT

PLOT DRIVER = ...\mjp\dms00314\ces.pdf.plt
PEN TABLE = ...\pentbl\ces.idot.general.tbl
FILE NAME = ...\2637-sht-details05.dgn

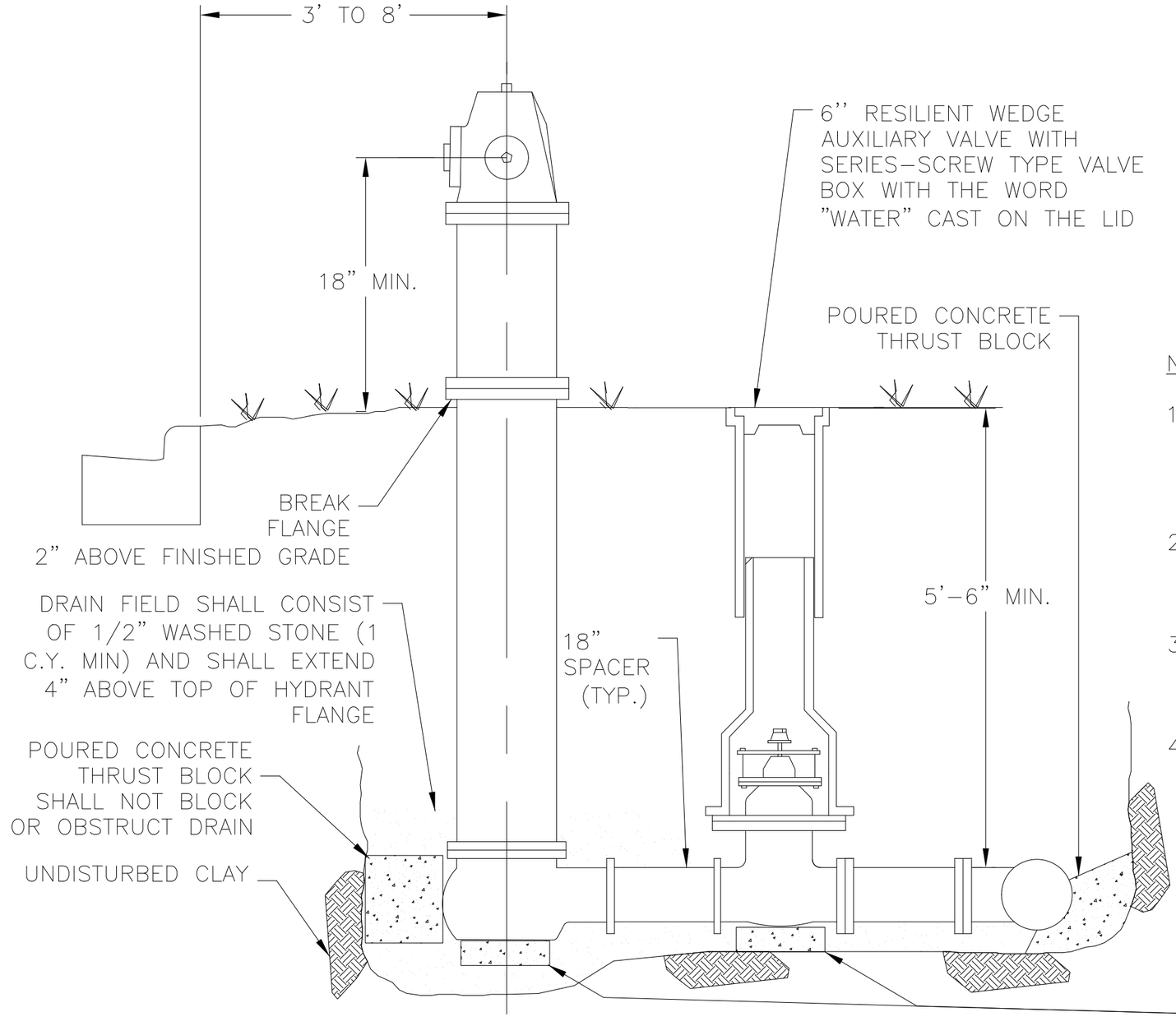

HYDRANT TO BE BREAKAWAY FLANGE TYPE MUELLER CENTURION 200 OR CLOW MEDALLION OR WATEROUS PACER, WITH 4½" STEAMER OUTLET AND 2-2½" HOSE CONNECTIONS.

NOTE:

1. HYDRANT, VALVE AND TEE SHALL BE SECURELY TIED TOGETHER WITH MEG-A-LUGS AND POURED CONCRETE THRUST BLOCKS.
2. ALL NUTS AND BOLTS ON HYDRANTS AND VALVES ARE TO BE STAINLESS STEEL.
3. HYDRANT AND VALVE ARE TO BE SET PLUMB AT THE ELEVATION SHOWN ON PLANS.
4. HYDRANT SHALL HAVE TWO COATS OF PAINT MATCHING THE CITY STANDARD FOR COLOR, COMMONLY KNOWN AS "PARROT GREEN", AND SHALL HAVE "HYDRAFINDER STANDARD" HYDRANT LOCATOR.

BATAVIA Since 1833 CITY OF ENERGY

REVISIONS		
NAME	BY	DATE

FIRE HYDRANT DETAIL

WM_FH

CITY OF BATAVIA
ENGINEERING & PUBLIC WORKS DEPARTMENTS
DATE:
DESIGNED BY: AMP CHECKED BY: NAB

CIVILTECH

USER NAME = mjp	DESIGNED - MJP	REVISED -
	DRAWN - MJP	REVISED -
PLOT SCALE = 1.0000 ' / in.	CHECKED - DNM	REVISED -
PLOT DATE = 10/10/2015	DATE - 10/12/15	REVISED -

STATE OF ILLINOIS
DEPARTMENT OF TRANSPORTATION

DEERPATH ROAD OVER MILL CREEK
CONSTRUCTION DETAILS

SCALE: N.T.S. | SHEET OF SHEETS | STA. TO STA.

F.A.U. RTE.	SECTION	COUNTY	TOTAL SHEETS	SHEET NO.
2327	07-00068-00-BR	KANE	78	59
		CONTRACT NO. 61A88		
		ILLINOIS FED. AID PROJECT		

PLOT DRIVER = ...\mjp\dms00314\ceu_pdf.plt
PEN TABLE = ...\pentbl\ceu_idot_general.tbl
FILE NAME = ...\2637-sht-details06.dgn

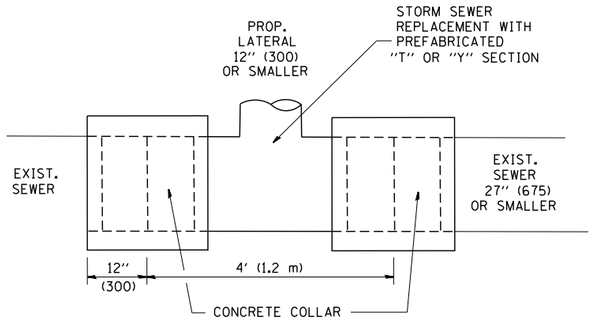

DETAIL "A"

LATERAL CONNECTION TO EXISTING SEWER
OF 27" (675) OR SMALLER

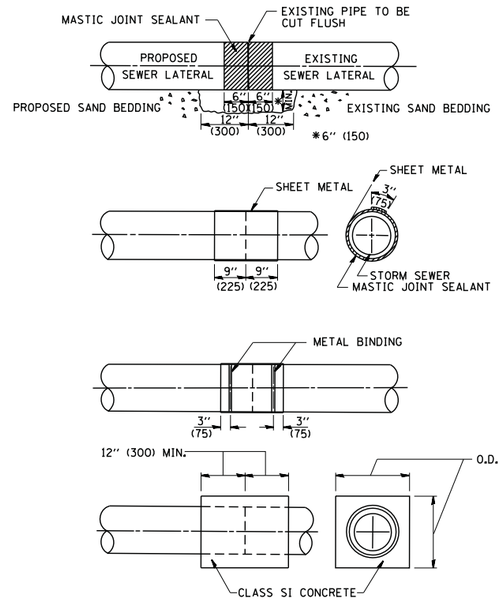

DETAIL "B"

CLASS SI CONCRETE COLLAR

CONSTRUCTION SEQUENCE

1. CUT THE EXISTING END OF THE PIPE SO AS TO PRESENT A FLUSH BUTT JOINT. BRUSH AND CLEAN ALL PIPES.
2. APPLY THE MASTIC JOINT SEALANT TO THE FIRST 6" (150) OF EACH PIPE.
3. BUTT THE PIPES TOGETHER LEAVING A MINIMUM OF 12' x 6' (300 x 150) DEEP EXCAVATION UNDER AND AROUND EACH PIPE END.
4. CUT A PIECE OF SHEET METAL GAGE NO. 19 1.1 (0.0418) 18" (450) WIDE BY THE OUTSIDE CIRCUMFERANCE OF THE PIPE PLUS 3" (75) LONG.
5. WRAP THE SHEET METAL AROUND THE PIPES, 9" (225) ON EACH SIDE OF THE JOINT, STARTING AT THE TOP OF THE PIPE.
6. LAP THE SHEET METAL AT LEAST 3" (75) AT THE TOP OF THE PIPE AND PLACE THE MASTIC JOINT SEALANT BETWEEN THE LAP.
7. PLACE TWO METAL BANDS AROUND THE SHEET METAL AND TIGHTEN.
8. WIPE OFF ANY EXCESS MASTIC JOINT SEALANT THAT OOZES OUT FROM BETWEEN THE SHEET METAL AND THE PIPES.
9. PLACE CLASS SI CONCRETE AROUND THE JOINT.

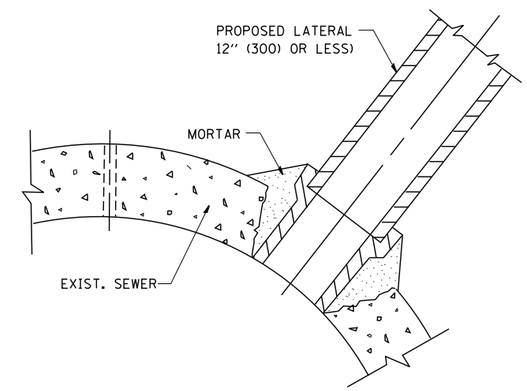

DETAIL "C"

PROPOSED LATERAL
CONNECTION TO EXISTING SEWER
OF 30" (750) OR LARGER

NOTES

MATERIAL

MATERIAL USED FOR THE TEE OR WYE SECTION SHALL BE COMPATIBLE WITH THE EXISTING STORM SEWER OR THE PROPOSED STORM SEWER.

CONSTRUCTION METHODS

I. THIS WORK SHALL BE CONSTRUCTED IN CONFORMANCE WITH THE APPLICABLE PORTIONS OF SECTION 550 OF THE STANDARD SPECIFICATIONS.

II. CONNECTION TO AN EXISTING STORM SEWER SHALL BE BY EITHER OF THE FOLLOWING METHODS:

A) PROPOSED STORM SEWER CONNECTION TO EXISTING SEWER OF 27" (675) OR SMALLER SEE DETAIL "A" AND "B".

B) PROPOSED STORM SEWER CONNECTION TO EXISTING SEWER OF 30" (750) OR LARGER SEE DETAIL "C".

IF THE EXISTING SEWER PIPE IS CRACKED, BROKEN OR OTHERWISE DAMAGED BY THE CONTRACTOR IN MAKING THE CIRCULAR OPENING, THE CONTRACTOR SHALL REPLACE THAT SECTION OF PIPE WITH PIPE EQUAL AND SIMILAR IN ALL RESPECTS TO THE PIPE IN THE EXISTING SEWER, IN A CAREFUL WORKMANLIKE MANNER, WITHOUT EXTRA COMPENSATION.

GENERAL

CARE MUST BE TAKEN TO PREVENT DEBRIS FROM ENTERING THE SEWER. ALL DEBRIS WHICH ENTERS THE SEWER MUST BE REMOVED. THE SEWER MUST BE LEFT CLEAN AND UNOBSTRUCTED UPON COMPLETION OF THE CONTRACT.

CARE MUST BE TAKEN TO PREVENT ANY PART OF THE NEW PIPE CONNECTION FROM PROJECTING INTO THE EXISTING SEWER.

BASIS OF PAYMENT

TEE OR WYE CONNECTIONS SHALL BE PAID FOR AT THE CONTRACT UNIT PRICE EACH FOR STORM SEWER TEE OR WYE OF THE TYPE AND SIZE SPECIFIED IN THE PLANS. THIS PRICE SHALL INCLUDE ALL EXCAVATION OF THE TRENCH, REMOVAL OF THE EXISTING STORM SEWER, FURNISHING AND INSTALLING THE SPECIFIED TEE OR WYE SECTION, FURNISHING AND INSTALLING THE REQUIRED CONCRETE COLLAR, AND ALL OTHER MATERIAL NECESSARY TO COMPLETE THIS WORK AS SHOWN AND SPECIFIED.

REMOVAL AND REINSTALLATION OF EXISTING STORM SEWER ADJACENT TO THE PROPOSED TEE OR WYE SECTION, FOR THE PURPOSE OF FACILITATING THE INSTALLATION OF THE TEE OR WYE SECTION, WILL NOT BE PAID FOR SEPARATELY BUT SHALL BE INCLUDED IN THE UNIT PRICE BID FOR THE WORK.

TRENCH BACKFILL, EXCAVATION IN ROCK AND REMOVAL AND REPLACEMENT OF UNSUITABLE MATERIAL BELOW PLAN BEDDING GRADE WILL BE PAID FOR SEPARATELY.

CONCRETE COLLAR FOR CONNECTING A PROPOSED STORM SEWER TO AN EXISTING STORM SEWER WILL NOT BE PAID PAID FOR SEPARATELY BUT SHALL BE INCLUDED IN THE COST OF THE PROPOSED STORM SEWER.

ALL DIMENSIONS ARE IN INCHES (MILLIMETERS) UNLESS OTHERWISE SHOWN.

FILE NAME = W:\diststd\22x34\bd07.dgn	USER NAME = gaglianobt	DESIGNED - M. DE YONG	REVISED - M. DE YONG 05-08-92	STATE OF ILLINOIS DEPARTMENT OF TRANSPORTATION	DETAIL OF STORM SEWER CONNECTION TO EXISTING SEWER			F.A.U. RTE.	SECTION	COUNTY	TOTAL SHEETS	SHEET NO.
		DRAWN -	REVISED - R. SHAH 09-09-94					2327	07-00068-00-BR	KANE	78	60
	PLOT SCALE = 50.000 ' / IN.	CHECKED -	REVISED - R. SHAH 10-25-94					BD500-01 (BD-7)		CONTRACT NO. 61A88		
	PLOT DATE = 1/4/2008	DATE - 07-25-90	REVISED - R. SHAH 06-12-96		SCALE: NONE	SHEET NO. 1 OF 1 SHEETS	STA. TO STA.	FED. ROAD DIST. NO. 1	ILLINOIS	FED. AID PROJECT		

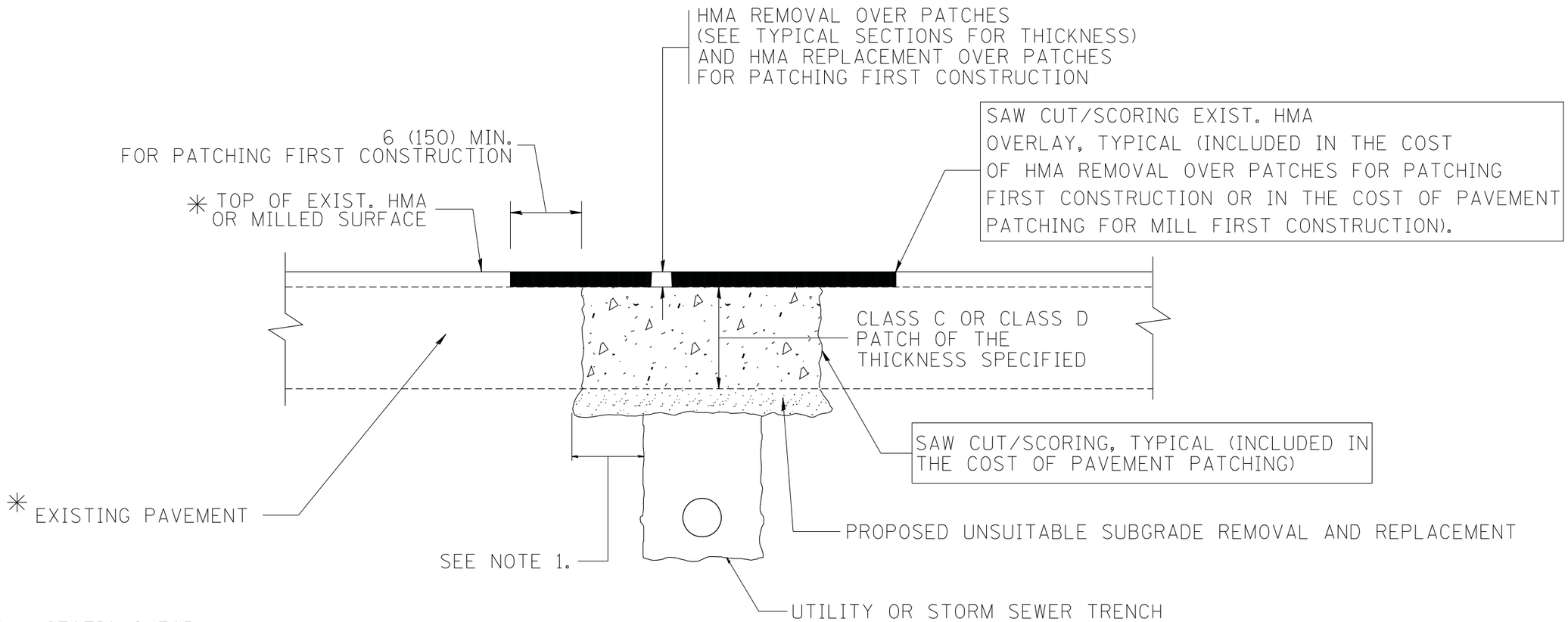

✳ SEE TYPICAL SECTIONS FOR THICKNESS AND MATERIALS

NOTES:

1. THE WIDTH OF THE FULL DEPTH PATCH OVER A TRENCH SHALL BE 12 (300) WIDER ON EACH SIDE OF THE TRENCH.
2. FOR METHOD OF MEASUREMENT AND BASIS OF PAYMENT, SEE RECURRING SPECIAL PROVISION "PATCHING WITH HOT-MIX ASPHALT OVERLAY REMOVAL".

SEQUENCE OF CONSTRUCTION (PATCHING FIRST)

1. REMOVE THE EXISTING HMA MATERIAL OVER THE AREA TO BE PATCHED.
2. REMOVE AND REPLACE WITH CLASS C OR D PATCH.
3. REPLACE HMA MATERIAL OVER THE AREA TO BE PATCHED.

SEQUENCE OF CONSTRUCTION (MILLING FIRST)

1. MILL HMA FIRST IF THERE IS AT LEAST 4½ INCHES OR MORE OF HMA MATERIAL ON TOP OF THE EXISTING PAVEMENT OR IF THE PAVEMENT IS FULL DEPTH HMA. A MINIMUM OF 2 INCHES OF HMA MATERIAL SHALL BE IN PLACE AFTER MILLING.
2. REMOVE AND REPLACE WITH FULL DEPTH CLASS D PATCHES TO TOP OF MILLED SURFACE.

ALL DIMENSIONS ARE IN INCHES (MILLIMETERS) UNLESS OTHERWISE SHOWN.

FILE NAME = c:\projects\diststd22x34\bd22.dgn	USER NAME = bauerdl	DESIGNED - R. SHAH	REVISED - A. ABBAS 04-27-98	STATE OF ILLINOIS DEPARTMENT OF TRANSPORTATION	PAVEMENT PATCHING FOR HMA SURFACED PAVEMENT			F.A.U. RTE.	SECTION	COUNTY	TOTAL SHEETS / SHEET NO.
		DRAWN -	REVISED - R. BORO 01-01-07					2327	07-00068-00-BR	KANE	78 / 61
	PLOT SCALE = 50.000 ' / IN.	CHECKED -	REVISED - R. BORO 09-04-07					BD400-04 (BD-22)		CONTRACT NO. 61A88	
	PLOT DATE = 10/27/2008	DATE - 10-25-94	REVISED - K. ENG 10-27-08		SCALE: NONE	SHEET NO. 1 OF 1 SHEETS	STA. TO STA.	FED. ROAD DIST. NO. 1	ILLINOIS	FED. AID PROJECT	

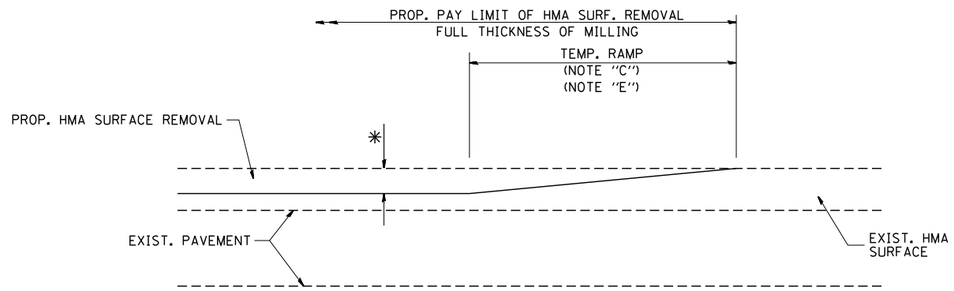

MILLED TEMPORARY RAMP

(FOR BUTT JOINT AND HMA TAPER SEE DETAIL BELOW)

OPTION 1

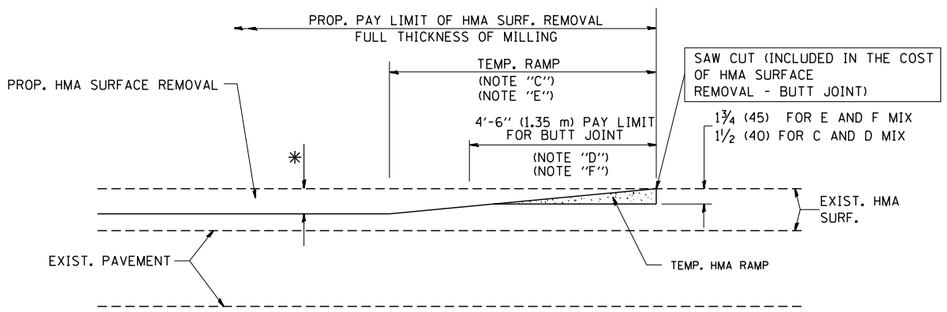

HMA CONSTRUCTED TEMPORARY RAMP

(FOR BUTT JOINT AND HMA TAPER SEE DETAIL BELOW)

OPTION 2

TYPICAL TEMPORARY RAMP

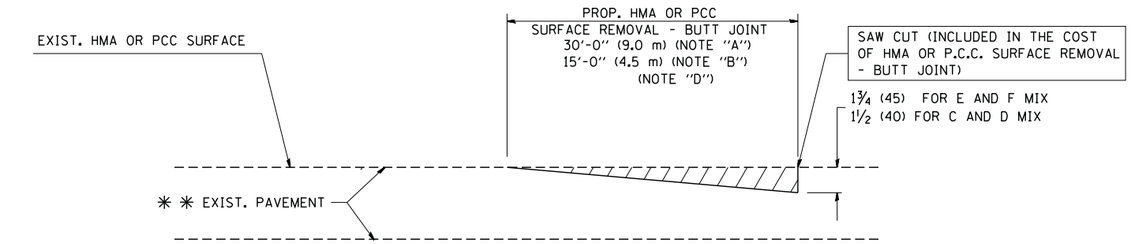

BUTT JOINT DETAIL

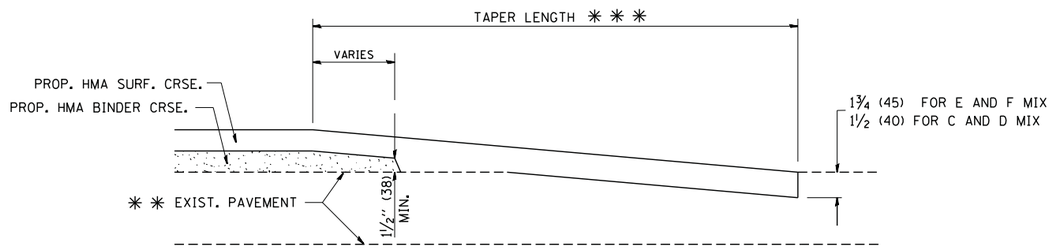

HMA TAPER DETAIL

TYPICAL BUTT JOINT AND HMA TAPER FOR RESURFACING ONLY

✳ ✳ PC CONCRETE, HMA OR HMA RESURFACED PAVEMENT.

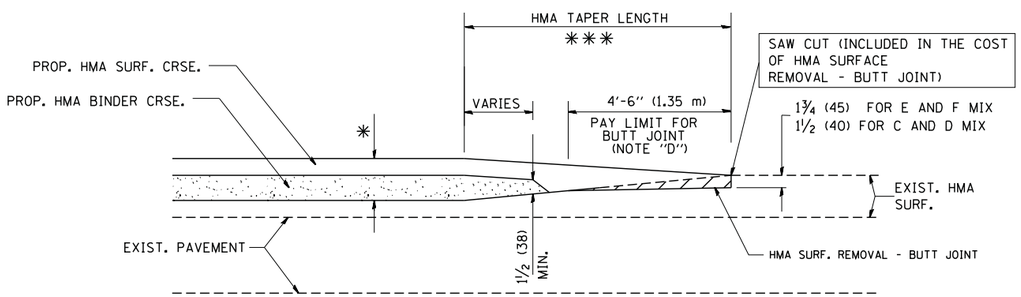

BUTT JOINT AND HMA TAPER

TYPICAL BUTT JOINT AND HMA TAPER FOR MILLING AND RESURFACING

NOTES

A: MAINLINE ROADWAYS AND MAJOR SIDE ROADS.

B: MINOR SIDE ROADS.

C: THE TEMP. RAMP SHALL BE CONSTRUCTED IMMEDIATELY UPON REMOVAL OF THE EXISTING HMA SURFACE.

D: THE BUTT JOINT SHALL BE CONSTRUCTED IMMEDIATELY PRIOR TO PLACING THE PROPOSED HMA COURSES.

E: TAPER THE TEMP. RAMP AT A RATE OF 3'-0" (900 mm) PER 1 INCH (25 mm) OF MILLING THICKNESS.

F: INSTALLATION AND REMOVAL OF THE 4'-6" (1.35 m) TEMP. RAMP IS INCLUDED IN COST OF HMA SURFACE REMOVAL - BUTT JOINT

G: SEE ARTICLE 406.08 AND 406.14 OF THE STANDARD SPECIFICATIONS FOR "HMA AND/OR PCC SURFACE REMOVAL, BUTT JOINT".

✳ SEE TYPICAL SECTIONS FOR MILLING THICKNESS.

✳ ✳ ✳ 20'-0" (6.1 m) PER 1 (25) RESURFACING (NOTE "A")
10'-0" (3.0 m) PER 1 (25) RESURFACING (NOTE "B")

BASIS OF PAYMENT:

THE BUTT JOINT WILL BE PAID FOR AT THE CONTRACT UNIT PRICE PER SQUARE YARD (SQUARE METER) FOR "HOT-MIX ASPHALT SURFACE REMOVAL - BUTT JOINT" OR FOR "PORTLAND CEMENT CONCRETE SURFACE REMOVAL- BUTT JOINT".

ALL DIMENSIONS ARE IN INCHES (MILLIMETERS) UNLESS OTHERWISE SHOWN.

FILE NAME = W:\diststd\22x34\bd32.dgn	USER NAME = gaglianobt	DESIGNED - M. DE YONG	REVISED - R. SHAH 10-25-94	STATE OF ILLINOIS DEPARTMENT OF TRANSPORTATION	BUTT JOINT AND HMA TAPER DETAILS			F.A.U. RTE.	SECTION	COUNTY	TOTAL SHEETS / SHEET NO.
		DRAWN -	REVISED - A. ABBAS 03-21-97					2327	07-00068-00-BR	KANE	78 / 62
	PLOT SCALE = 50.0000 ' / IN.	CHECKED -	REVISED - M. GOMEZ 04-06-01					BD400-05 BD32		CONTRACT NO. 61A88	
	PLOT DATE = 1/4/2008	DATE - 06-13-90	REVISED - R. BORO 01-01-07		SCALE: NONE	SHEET NO. 1 OF 1 SHEETS	STA. TO STA.	FED. ROAD DIST. NO. 1	ILLINOIS	FED. AID PROJECT	

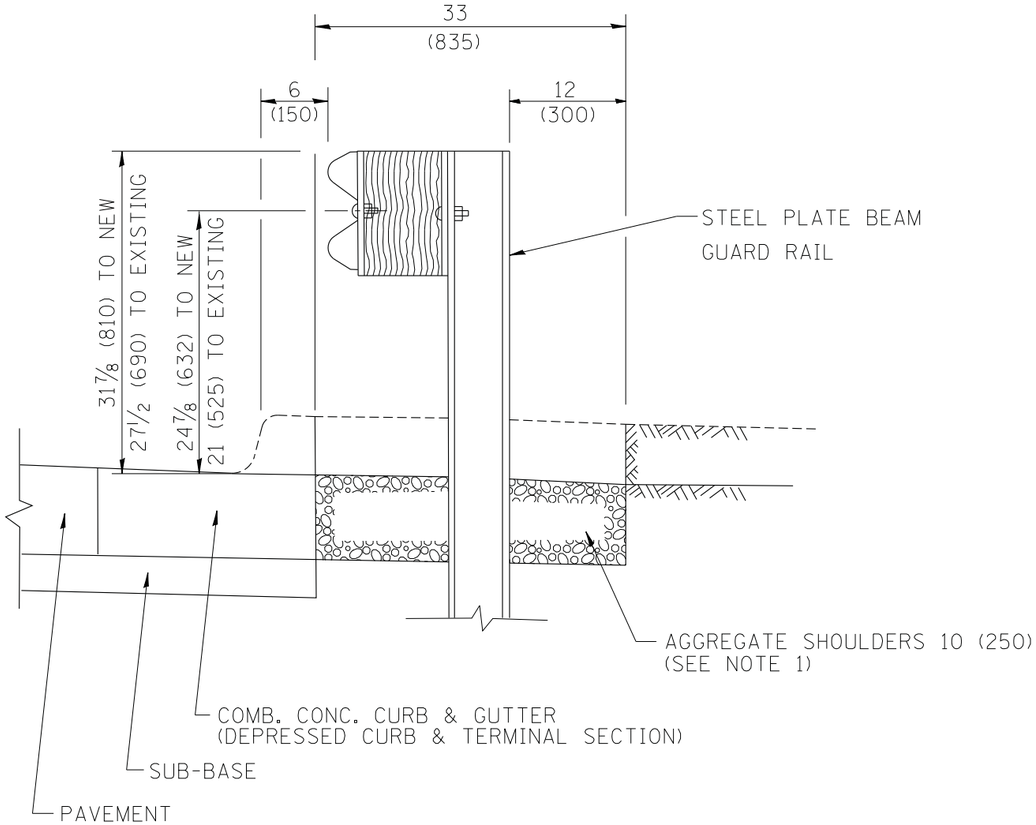

SECTION A-A

NOTES:

1. THE AGGREGATE SHOULDER, 10" OR HMA SHOULDER, 6" (IF REQUIRED) SHALL EXTEND UNDER THE TRAFFIC BARRIER TERMINAL.
2. "EXISTING" GUARDRAIL REFERS TO CONNECTING TERMINAL SECTION TO GUARD RAILING PRIOR TO THE MIDWEST GUARDRAIL SYSTEM.
3. THE CONTRACTOR SHALL VERIFY THE TYPE/HEIGHT OF GUARDRAIL IN-PLACE BEFORE ORDERING THE NEW TERMINAL SECTION. COST INCLUDED WITH THE COST OF THE TERMINAL. THE TERMINAL SECTION HEIGHT TO BE PLACED MUST MATCH THE HEIGHT OF THE IN-PLACE GUARDRAIL.

DETAILS FOR STEEL PLATE BEAM GUARD RAIL ADJACENT TO CURB AND GUTTER

[FOR ROADWAY SPEED 35 MPH (60 kmh) TO 45 MPH (70 kmh)]

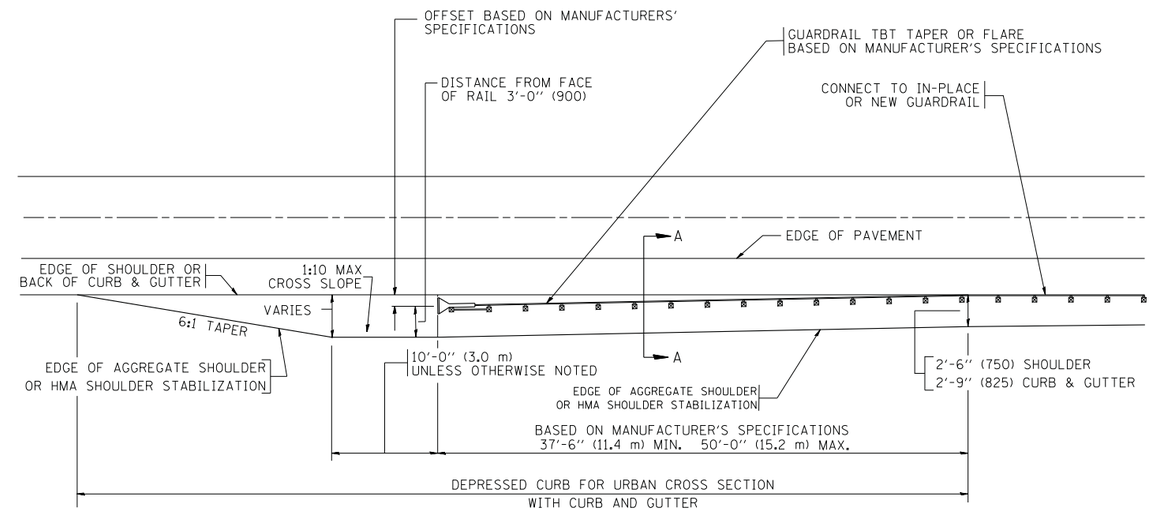

DEPRESSED CURB AND GUTTER AND SHOULDER TREATMENT AT TBT TY. 1 SPL.

BASIS OF PAYMENT: HMA SHOULDERS 6 (150) (IF REQUIRED) WILL BE PAID FOR AT THE CONTRACT UNIT PRICE PER SQUARE YARD (SQUARE METER) FOR "HOT-MIX ASPHALT SHOULDERS 6" (150 mm)".

STEEL PLATE BEAM GUARD RAIL AND TRAFFIC BARRIER TERMINAL, OF THE TYPE SPECIFIED WILL BE PAID FOR SEPARATELY.

TBT = TRAFFIC BARRIER TERMINAL

ALL DIMENSIONS ARE IN INCHES (MILLIMETERS) UNLESS OTHERWISE SHOWN.

FILE NAME = c:\pw_work\PWIDOT\DRIVAKOSGN\d0103115\bd34.dgn	USER NAME = drivakosgn	DESIGNED - M. DE YONG	REVISED - E. GOMEZ 08-28-00	STATE OF ILLINOIS DEPARTMENT OF TRANSPORTATION	DETAILS FOR DEPRESSED CURB & GUTTER AND SHOULDER TREATMENT AT TBT TY 1 SPL.
	PLOT SCALE = 49.9999 ' / IN.	DRAWN -	REVISED - R. BORO 01-01-07		
		CHECKED -	REVISED - R. BORO 12-08-2008		
	PLOT DATE = 9/21/2009	DATE - 09-22-90	REVISED - R. BORO 09-14-2009		SCALE: NONE SHEET NO. 1 OF 1 SHEETS STA. TO STA.

F.A.U. RTE.	SECTION	COUNTY	TOTAL SHEETS	SHEET NO.
2327	07-00068-00-BR	KANE	78	63
	BD600-10 (BD 34)	CONTRACT NO. 61A88		
FED. ROAD DIST. NO. 1	ILLINOIS	FED. AID PROJECT		

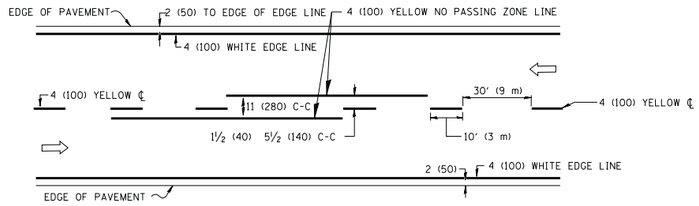

2-LANE ROADWAY

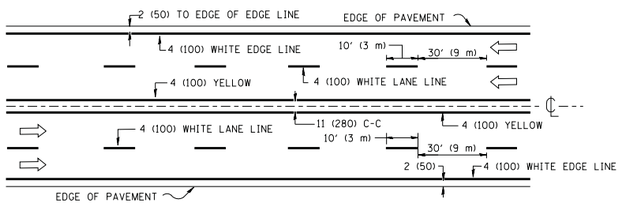

MULTI-LANE UNDIVIDED

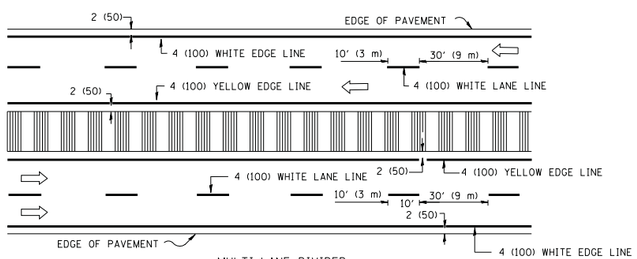

MULTI-LANE DIVIDED
WITH MOUNTABLE MEDIAN

NOTE: MEDIANS WITH BARRIER CURB DO NOT REQUIRE AN EDGE LINE

TYPICAL LANE AND EDGE LINE MARKING

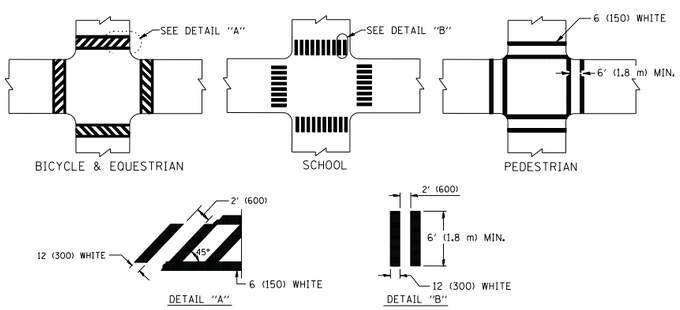

TYPICAL CROSSWALK MARKING

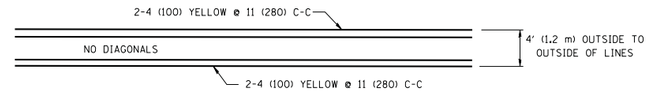

4' (1.2 m) WIDE MEDIANS ONLY

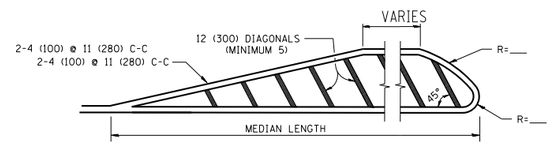

FOR MEDIAN LENGTHS WHERE DIAGONAL SPACING CANNOT BE ATTAINED, USE 5 (FIVE) EQUALLY SPACED DIAGONAL LINES.

DIAGONAL LINE SPACING: 50' (15 m) C-C (LESS THAN 30MPH (50 km/h))
75' (25 m) C-C 30MPH (50 km/h) TO 45MPH (70 km/h))
150' (45 m) C-C (MORE THAN 45MPH (70 km/h))

MEDIANS OVER 4' (1.2 m) WIDE

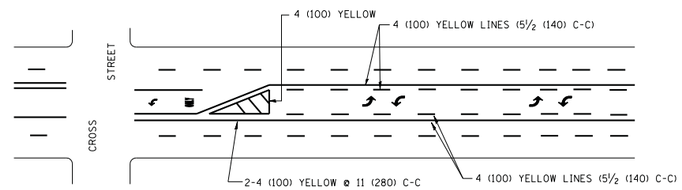

A MINIMUM OF TWO PAIRS OF TURN ARROWS SHALL BE USED, WHITE IN COLOR. ADDITIONAL PAIRS SHALL BE PLACED AT 200' (60 m) TO 300' (90 m) INTERVALS.

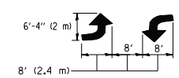

MEDIAN WITH TWO-WAY LEFT TURN LANE

TYPICAL PAINTED MEDIAN MARKING

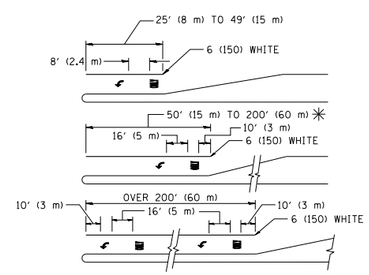

FULL SIZE LETTERS 8' (2.4 m) AND ARROWS SHALL BE USED.
↰ AREA = 15.6 SQ. FT. (1.5 m^2) **ONLY** AREA = 20.8 SQ. FT. (1.9 m^2)

✳ TURN LANES IN EXCESS OF 400' (120 m) IN LENGTH MAY HAVE AN ADDITIONAL SET OF ARROW - "ONLY" INSTALLED MIDWAY BETWEEN THE OTHER TWO SETS OF ARROW - "ONLY".

TYPICAL LEFT (OR RIGHT) TURN LANE

TYPICAL TURN LANE MARKING

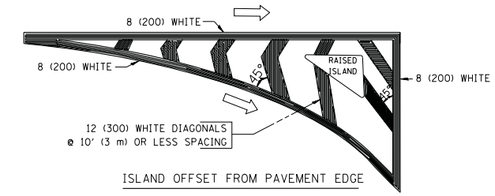

ISLAND OFFSET FROM PAVEMENT EDGE

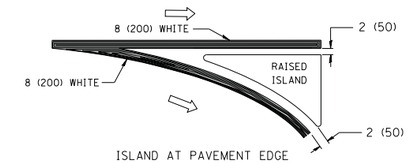

ISLAND AT PAVEMENT EDGE

TYPICAL ISLAND MARKING

TYPE OF MARKING	WIDTH OF LINE	PATTERN	COLOR	SPACING / REMARKS
CENTERLINE ON 2 LANE PAVEMENT	4 (100)	SKIP-DASH	YELLOW	10' (3 m) LINE WITH 30' (9 m) SPACE
CENTERLINE ON MULTI-LANE UNDIVIDED PAVEMENT	2 @ 4 (100)	SOLID	YELLOW	11 (280) C-C
NO PASSING ZONE LINES: FOR ONE DIRECTION FOR BOTH DIRECTIONS	4 (100) 2 @ 4 (100)	SOLID SOLID	YELLOW YELLOW	5½ (140) C-C FROM SKIP-DASH CENTERLINE 11 (280) C-C OMIT SKIP-DASH CENTERLINE BETWEEN
LANE LINES	4 (100) 5 (125) ON FREEWAYS	SKIP-DASH SKIP-DASH	WHITE WHITE	10' (3 m) LINE WITH 30' (9 m) SPACE
DOTTED LINES (EXTENSIONS OF CENTER, LANE OR TURN LANE MARKINGS)	SAME AS LINE BEING EXTENDED	SKIP-DASH	SAME AS LINE BEING EXTENDED	2' (600) LINE WITH 6' (1.8 m) SPACE
EDGE LINES	4 (100)	SOLID	YELLOW-LEFT WHITE-RIGHT	OUTLINE MOUNTABLE MEDIANS IN YELLOW; EDGE LINES ARE NOT USED NEXT TO BARRIER CURB
TURN LANE MARKINGS	6 (150) LINE; FULL SIZE LETTERS & SYMBOLS (8' (2.4m))	SOLID	WHITE	SEE TYPICAL TURN LANE MARKING DETAIL
TWO WAY LEFT TURN MARKING	2 @ 4 (100) EACH DIRECTION 8' (2.4m) LEFT ARROW	SKIP-DASH AND SOLID IN PAIRS	YELLOW WHITE	10' (3 m) LINE WITH 30' (9 m) SPACE FOR SKIP-DASH; 5½ (140) C-C BETWEEN SOLID LINE AND SKIP-DASH LINE SEE TYPICAL TWO-WAY LEFT TURN MARKING DETAIL
CROSSWALK LINES (PEDESTRIAN) A. DIAGONALS (BIKE & EQUESTRIAN) B. LONGITUDINAL BARS (SCHOOL)	2 @ 6 (150) 12 (300) @ 45° 12 (300) @ 90°	SOLID SOLID SOLID	WHITE WHITE WHITE	NOT LESS THAN 6' (1.8 m) APART 2' (600) APART 2' (600) APART SEE TYPICAL CROSSWALK MARKING DETAILS.
STOP LINES	24 (600)	SOLID	WHITE	PLACE 4' (1.2 m) IN ADVANCE OF AND PARALLEL TO CROSSWALK, IF PRESENT. OTHERWISE, PLACE AT DESIRED STOPPING POINT. PARALLEL TO CROSSROAD CENTERLINE, WHERE POSSIBLE
PAINTED MEDIANS	2 @ 4 (100) WITH 12 (300) DIAGONALS @ 45° NO DIAGONALS USED FOR 4' (1.2 m) WIDE MEDIANS	SOLID	YELLOW: TWO WAY TRAFFIC WHITE: ONE WAY TRAFFIC	11 (280) C-C FOR THE DOUBLE LINE SEE TYPICAL PAINTED MEDIAN MARKING.
GORE MARKING AND CHANNELIZING LINES	8 (200) WITH 12 (300) DIAGONALS @ 45°	SOLID	WHITE	DIAGONALS: 15' (4.5 m) C-C (LESS THAN 30MPH (50 km/h)) 20' (6 m) C-C 30MPH (50 km/h) TO 45MPH (70 km/h)) 30' (9 m) C-C (OVER 45MPH (70 km/h))
RAILROAD CROSSING	24 (600) TRANSVERSE LINES; "RR" IS 6' (1.8 m) LETTERS; 16 (400) LINE FOR "X"	SOLID	WHITE	SEE STATE STANDARD 780001 AREA OF: "R"=3.6 SQ. FT. (0.33 m^2) EACH "X"=54.0 SQ. FT. (5.0 m^2)
SHOULDER DIAGONALS	12 (300) @ 45°	SOLID	WHITE - RIGHT YELLOW - LEFT	50' (15 m) C-C (LESS THAN 30MPH (50 km/h)) 75' (25 m) C-C (30 MPH (50 km/h) TO 45MPH (70 km/h)) 150' (45 m) C-C (OVER 45MPH (70 km/h))

FOR FURTHER DETAILS ON PAVEMENT MARKING REFER TO STANDARD SPECIFICATIONS FOR ROAD AND BRIDGE CONSTRUCTION AND STATE STANDARD 780001.

All dimensions are in inches (millimeters) unless otherwise shown.

FILE NAME = c:\pw_work\pwidot\drivakosgn\d0108315\tc13.dgn	USER NAME = drivakosgn	DESIGNED - EVERS	REVISED -T. RAMMACHER 10-27-94
		DRAWN -	REVISED -C. JUCIUS 09-09-09
	PLOT SCALE = 50.000 ' / IN.	CHECKED -	REVISED -
	PLOT DATE = 9/9/2009	DATE - 03-19-90	REVISED -

STATE OF ILLINOIS
DEPARTMENT OF TRANSPORTATION

DISTRICT ONE
TYPICAL PAVEMENT MARKINGS

SCALE: NONE | SHEET NO. 1 OF 1 SHEETS | STA. TO STA.

F.A.U. RTE.	SECTION	COUNTY	TOTAL SHEETS	SHEET NO.
2327	07-00068-00-BR	KANE	78	64
	TC-13	CONTRACT NO. **61A88**		

FED. ROAD DIST. NO. 1 | ILLINOIS | FED. AID PROJECT

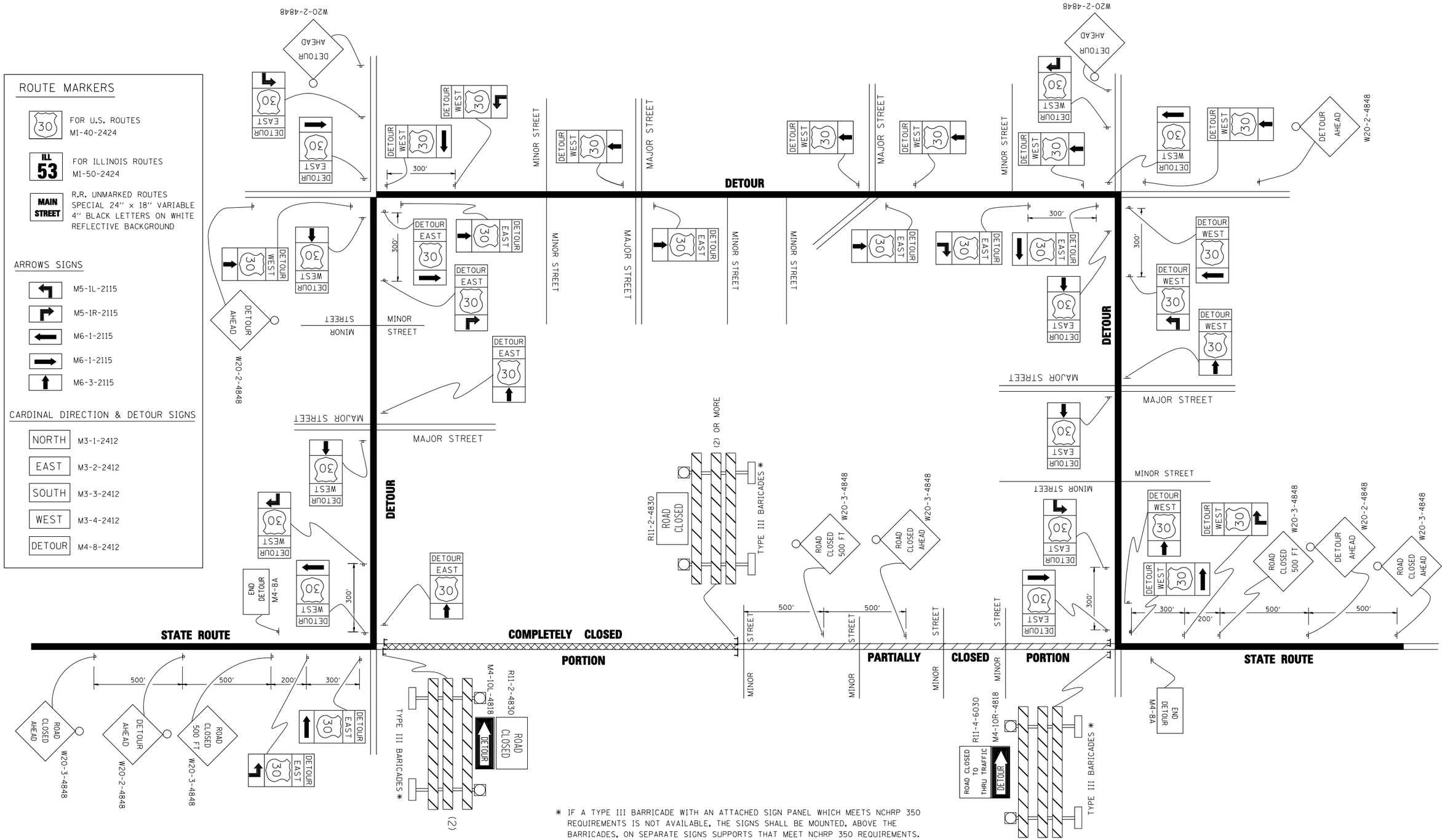

* IF A TYPE III BARRICADE WITH AN ATTACHED SIGN PANEL WHICH MEETS NCHRP 350 REQUIREMENTS IS NOT AVAILABLE, THE SIGNS SHALL BE MOUNTED, ABOVE THE BARRICADES, ON SEPARATE SIGNS SUPPORTS THAT MEET NCHRP 350 REQUIREMENTS.

FILE NAME = c:\pw_work\PWIDOT\DRIVAKOSGN\d0103l5\tc21.dgn	USER NAME = drivakosgn	DESIGNED -	REVISED - 10-18-02	STATE OF ILLINOIS DEPARTMENT OF TRANSPORTATION	DETOUR SIGNING FOR CLOSING STATE HIGHWAYS	F.A.U. RTE.	SECTION	COUNTY	TOTAL SHEETS	SHEET NO.
		DRAWN -	REVISED - R. BORO 09-14-09			2327	07-00068-00-BR	KANE	78	65
	PLOT SCALE = 49.9999 ' / IN.	CHECKED -	REVISED -			TC-21		CONTRACT NO. 61A88		
	PLOT DATE = 9/14/2009	DATE -	REVISED -		SCALE: NONE / SHEET NO. 1 OF 1 SHEETS / STA. TO STA.	FED. ROAD DIST. NO. 1	ILLINOIS	FED. AID PROJECT		

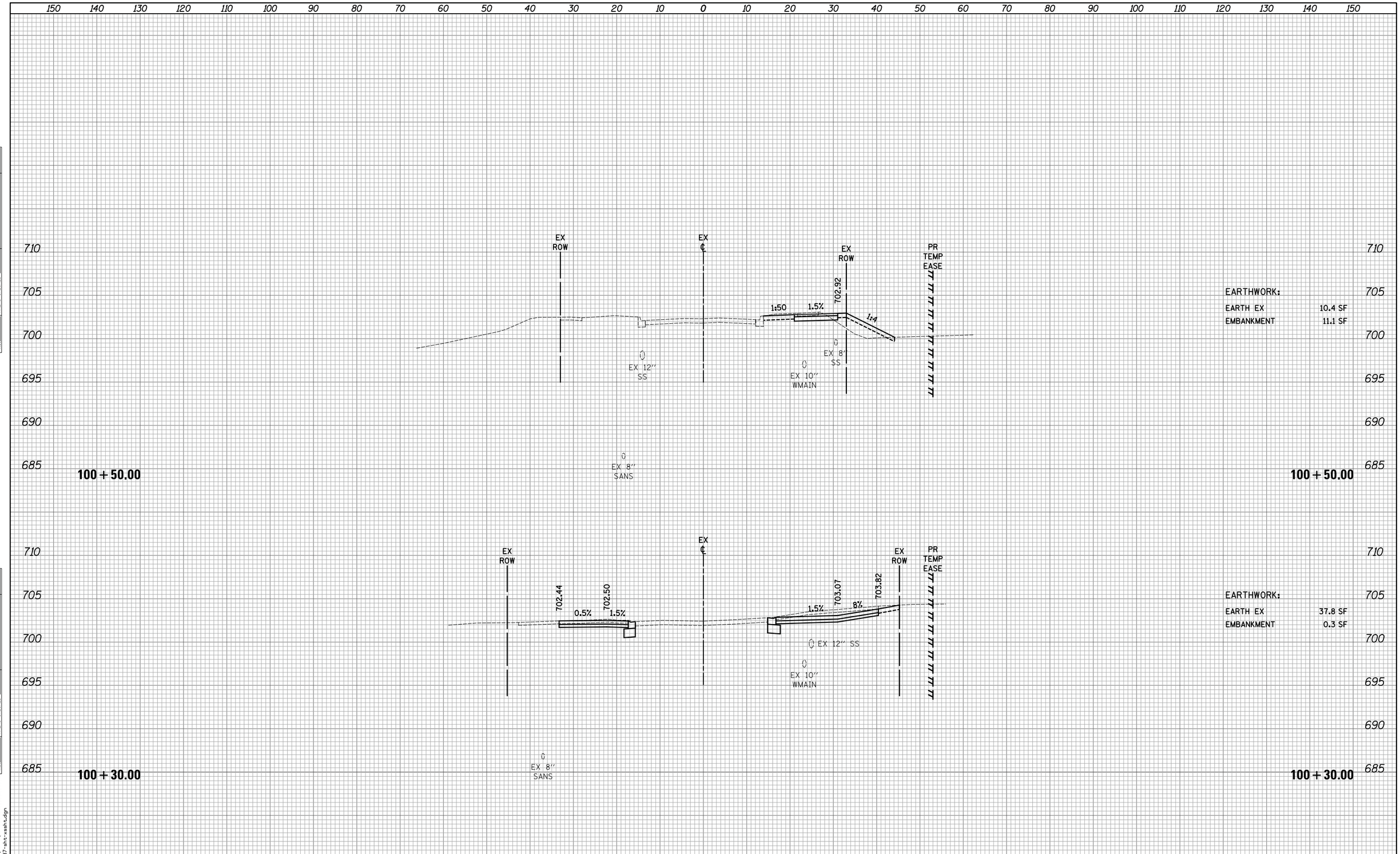

FINAL SURVEY	BY	DATE
SURVEYED		
PLOTTED		
TEMPLATE		
AREAS		
AREAS CHECKED		
NOTE BOOK		
NO.		

ORIGINAL SURVEY	BY	DATE
SURVEYED		
PLOTTED		
TEMPLATE		
AREAS		
AREAS CHECKED		
NOTE BOOK		
NO.		

PLOT DRIVER = ...\mjp\dms00314\ces.pdf.plt
PEN TABLE = ...\support\pentbl\ces.idot_xs.tbl
FILE NAME = ...\2637-sht-xsght.dgn

CIVILTECH

USER NAME = mjp	DESIGNED - MJP	REVISED -
	DRAWN - MJP	REVISED -
PLOT SCALE = 10.0000 ' / in.	CHECKED - DNM	REVISED -
PLOT DATE = 10/10/2015	DATE - 10/12/15	REVISED -

STATE OF ILLINOIS
DEPARTMENT OF TRANSPORTATION

DEERPATH ROAD OVER MILL CREEK
CROSS SECTIONS - DEERPATH ROAD

SCALE: 1"=10'H/5'V | SHEET OF SHEETS | STA. 100+30.00 TO STA. 100+50.00

F.A.U. RTE.	SECTION	COUNTY	TOTAL SHEETS	SHEET NO.
2327	07-00068-00-BR	KANE	78	66
		CONTRACT NO. 61A88		

ILLINOIS FED. AID PROJECT

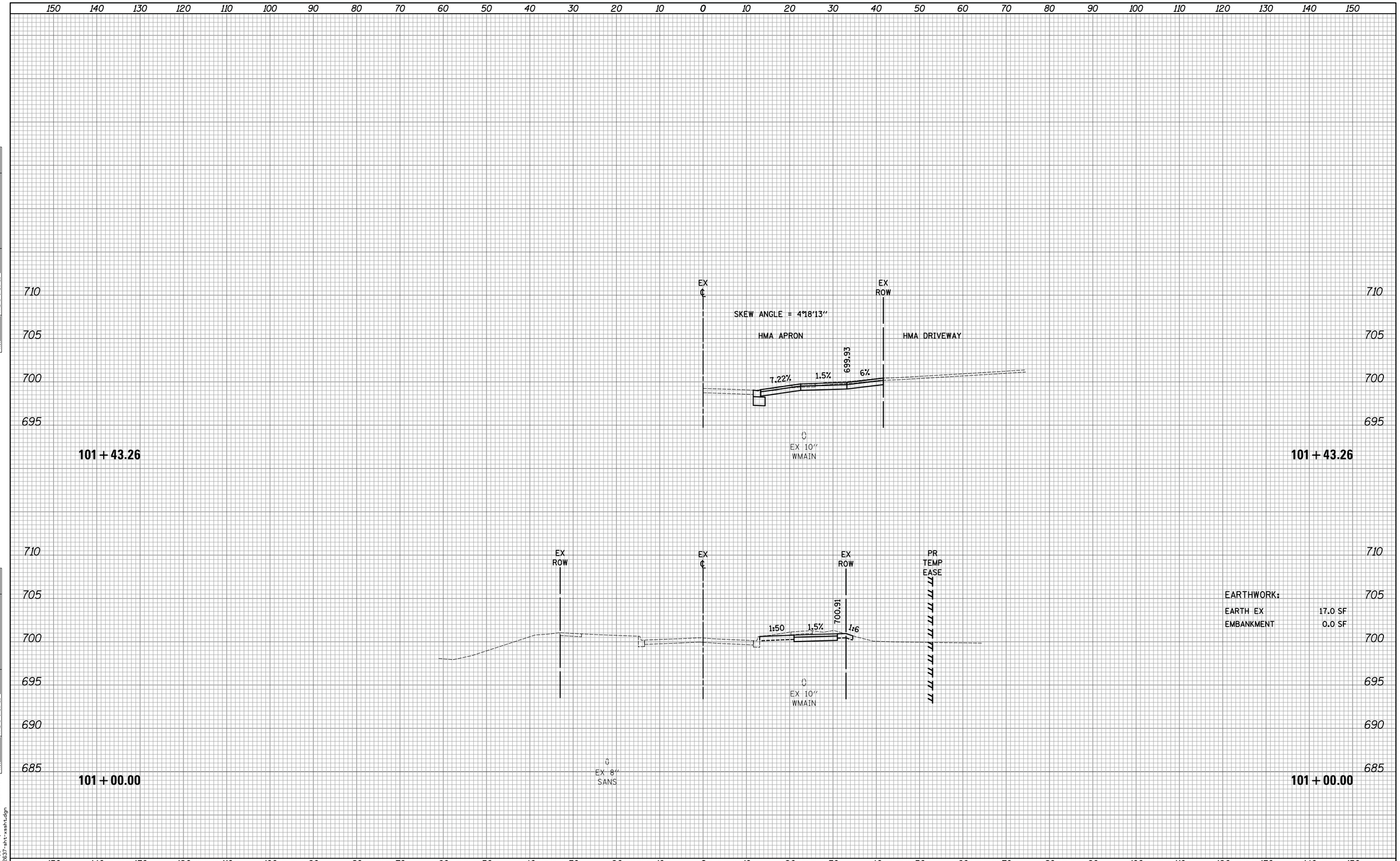

FINAL SURVEY		BY	DATE
NOTE BOOK	SURVEYED		
	PLOTTED		
	TEMPLATE		
	AREAS		
NO.	AREAS CHECKED		

ORIGINAL SURVEY		BY	DATE
NOTE BOOK	SURVEYED		
	PLOTTED		
	TEMPLATE		
	AREAS		
NO.	AREAS CHECKED		

PLOT DRIVER = ...\mjp\dms00314\ces.pdf.plt
PEN TABLE = ...\support\pentbl\ces.idot_xs.tbl
FILE NAME = ...\2637-sht-xssht.dgn

CIVILTECH

USER NAME = mjp	DESIGNED - MJP	REVISED -
	DRAWN - MJP	REVISED -
PLOT SCALE = 10.0000 ' / in.	CHECKED - DNM	REVISED -
PLOT DATE = 10/10/2015	DATE - 10/12/15	REVISED -

STATE OF ILLINOIS
DEPARTMENT OF TRANSPORTATION

DEERPATH ROAD OVER MILL CREEK
CROSS SECTIONS – DEERPATH ROAD

SCALE: 1"=10'H/5'V | SHEET OF SHEETS | STA. 101+00.00 TO STA. 101+43.26

F.A.U. RTE.	SECTION	COUNTY	TOTAL SHEETS	SHEET NO.
2327	07-00068-00-BR	KANE	78	67
		CONTRACT NO. 61A88		

ILLINOIS FED. AID PROJECT

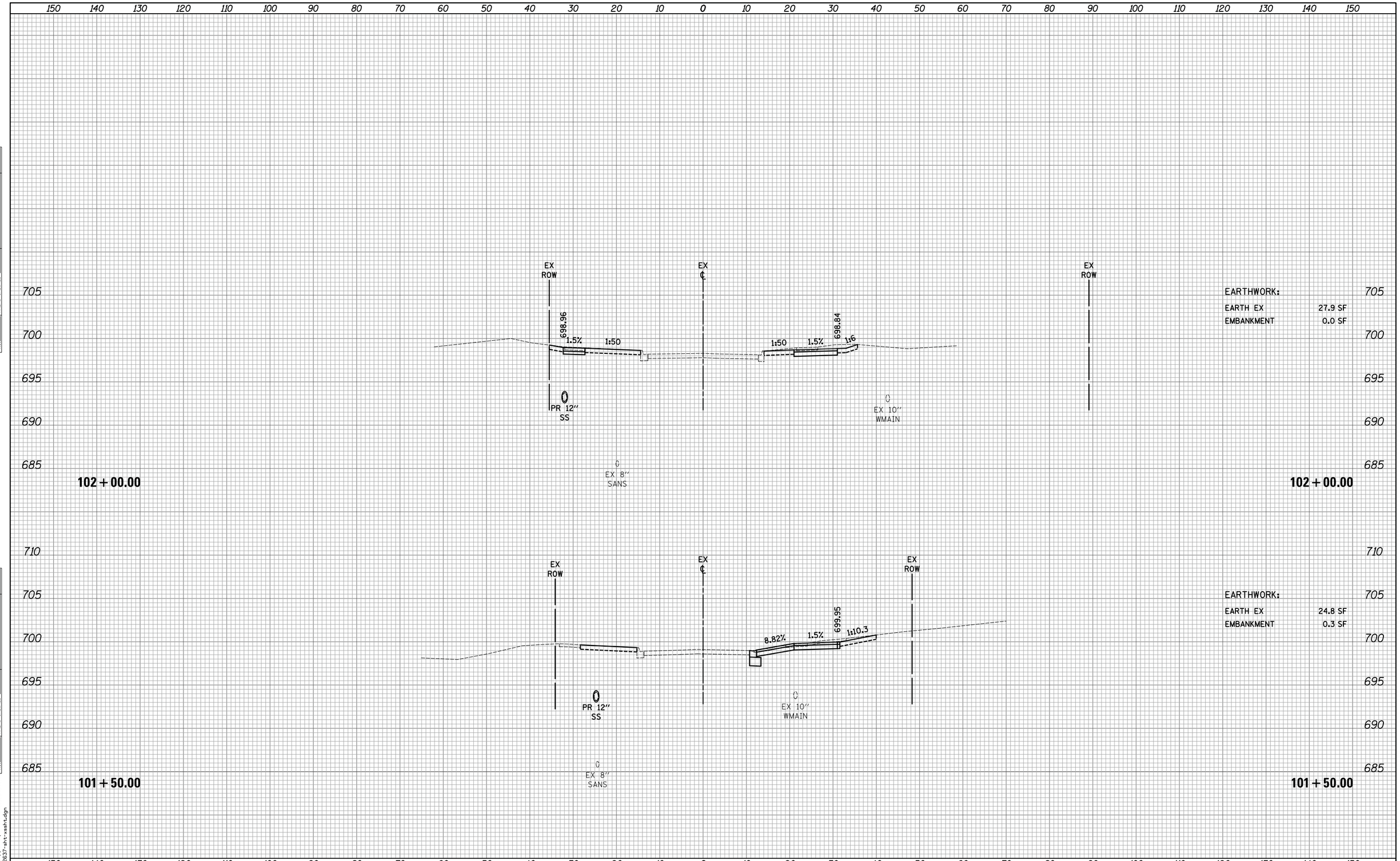

FINAL SURVEY		BY	DATE
NOTE BOOK	SURVEYED		
	PLOTTED		
	TEMPLATE		
	AREAS		
NO.	AREAS CHECKED		

ORIGINAL SURVEY		BY	DATE
NOTE BOOK	SURVEYED		
	PLOTTED		
	TEMPLATE		
	AREAS		
NO.	AREAS CHECKED		

PLOT DRIVER = ...\mjp\dms00314\cei.pdf.plt
PEN TABLE = ...\support\pentbl\cei.idot_xs.tbl
FILE NAME = ...\2637-sht-xsght.dgn

CIVILTECH

USER NAME = mjp	DESIGNED - MJP	REVISED -
	DRAWN - MJP	REVISED -
PLOT SCALE = 10.0000 ' / in.	CHECKED - DNM	REVISED -
PLOT DATE = 10/10/2015	DATE - 10/12/15	REVISED -

STATE OF ILLINOIS
DEPARTMENT OF TRANSPORTATION

DEERPATH ROAD OVER MILL CREEK
CROSS SECTIONS - DEERPATH ROAD

SCALE: 1"=10'H/5'V | SHEET OF SHEETS | STA. 101+50.00 TO STA. 102+00.00

F.A.U. RTE.	SECTION	COUNTY	TOTAL SHEETS	SHEET NO.
2327	07-00068-00-BR	KANE	78	68
		CONTRACT NO. 61A88		
		ILLINOIS FED. AID PROJECT		

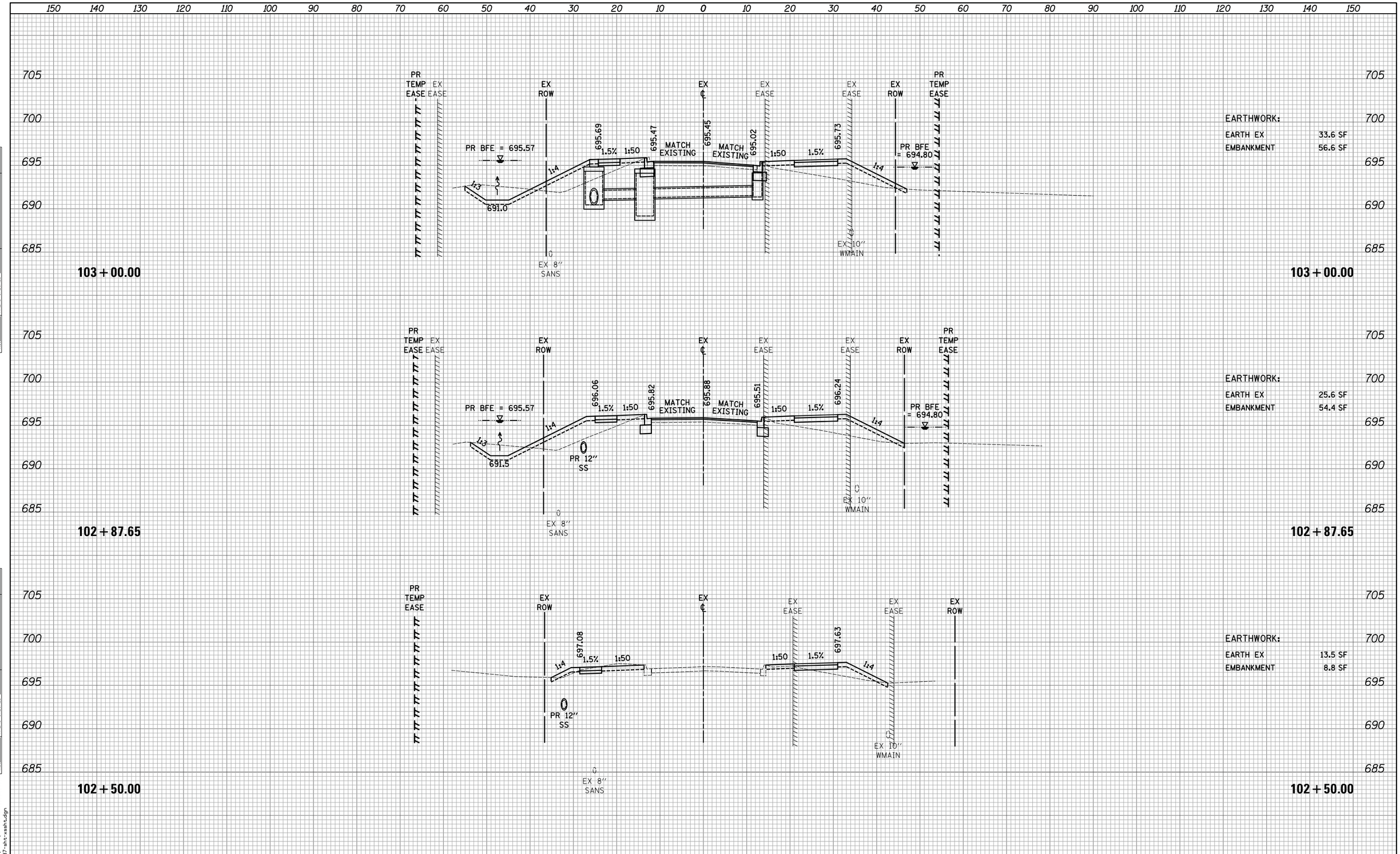

FINAL SURVEY	BY	DATE
SURVEYED		
PLOTTED		
TEMPLATE		
AREAS		
AREAS CHECKED		
NOTE BOOK NO.		

ORIGINAL SURVEY	BY	DATE
SURVEYED		
PLOTTED		
TEMPLATE		
AREAS		
AREAS CHECKED		
NOTE BOOK NO.		

PLOT DRIVER = ...\m_p\dms80314\ceu_pdf.plt
PEN TABLE = ...\support\pentbl\ceu_idot_xs.tbl
FILE NAME = ...\2637-sht-xsaht.dgn

CIVILTECH

USER NAME = mjp	DESIGNED - MJP	REVISED -
	DRAWN - MJP	REVISED -
PLOT SCALE = 10.0000 ' / in.	CHECKED - DNM	REVISED -
PLOT DATE = 10/10/2015	DATE - 10/12/15	REVISED -

STATE OF ILLINOIS
DEPARTMENT OF TRANSPORTATION

DEERPATH ROAD OVER MILL CREEK
CROSS SECTIONS – DEERPATH ROAD

SCALE: 1"=10'H/5'V | SHEET OF SHEETS | STA. 102+50.00 TO STA. 103+00.00

F.A.U. RTE.	SECTION	COUNTY	TOTAL SHEETS	SHEET NO.
2327	07-00068-00-BR	KANE	78	69
		CONTRACT NO. 61A88		
		ILLINOIS FED. AID PROJECT		

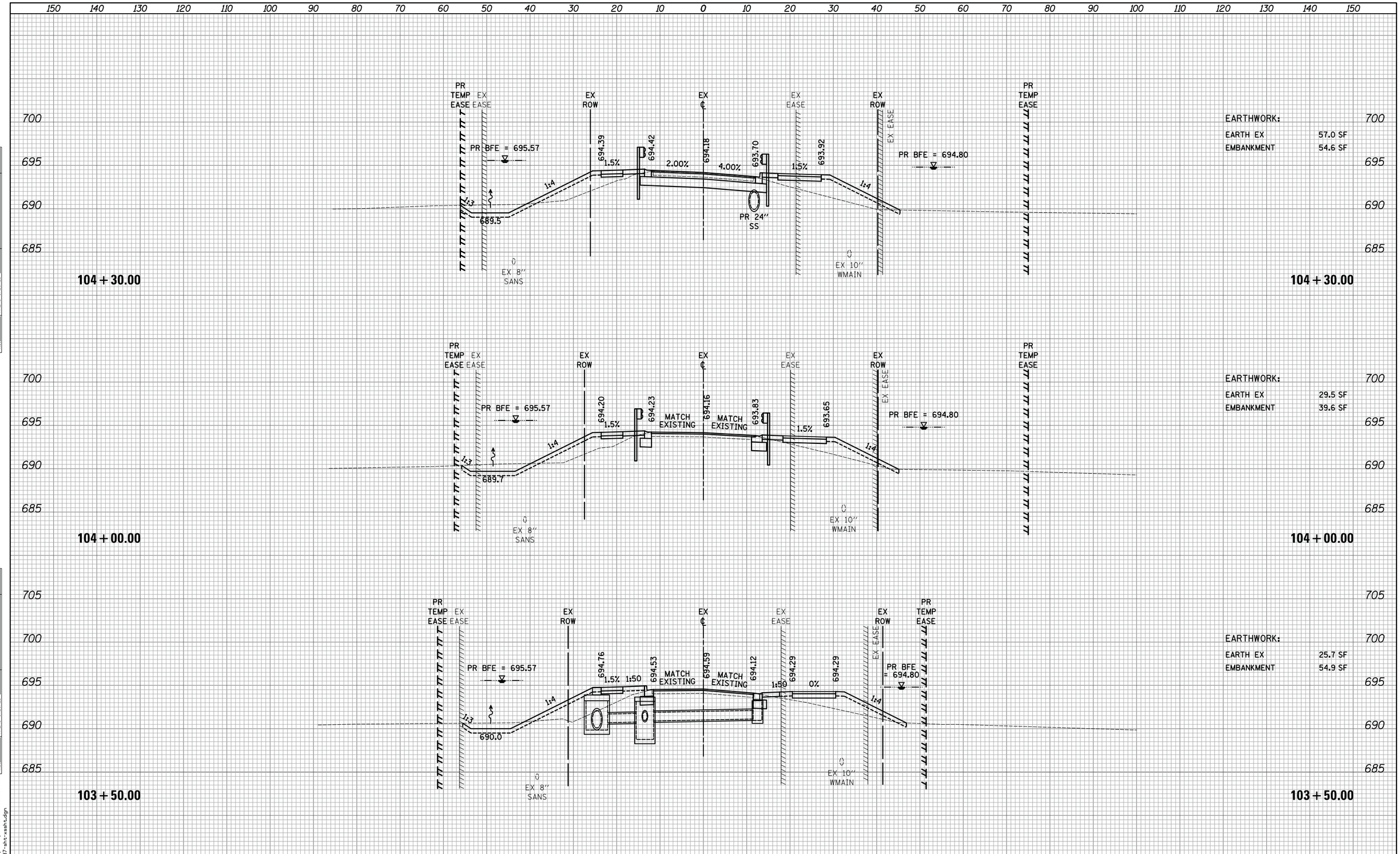

FINAL SURVEY	BY	DATE
SURVEYED		
PLOTTED		
TEMPLATE		
AREAS		
AREAS CHECKED		
NOTE BOOK NO.		

ORIGINAL SURVEY	BY	DATE
SURVEYED		
PLOTTED		
TEMPLATE		
AREAS		
AREAS CHECKED		
NOTE BOOK NO.		

PLOT DRIVER = ...\mjp\dms80314\cen.pdf.plt
PEN TABLE = ...\support\pentbl\cen.idot_xs.tbl
FILE NAME = ...\2637-sht-xsht.dgn

CIVILTECH

USER NAME = mjp	DESIGNED - MJP	REVISED -
	DRAWN - MJP	REVISED -
PLOT SCALE = 10.0000 ' / in.	CHECKED - DNM	REVISED -
PLOT DATE = 10/10/2015	DATE - 10/12/15	REVISED -

STATE OF ILLINOIS
DEPARTMENT OF TRANSPORTATION

DEERPATH ROAD OVER MILL CREEK
CROSS SECTIONS – DEERPATH ROAD

SCALE: 1"=10'H/5'V | SHEET OF SHEETS | STA. 103+50.00 TO STA. 104+30.00

F.A.U. RTE.	SECTION	COUNTY	TOTAL SHEETS	SHEET NO.
2327	07-00068-00-BR	KANE	78	70
		CONTRACT NO. 61A88		
		ILLINOIS FED. AID PROJECT		

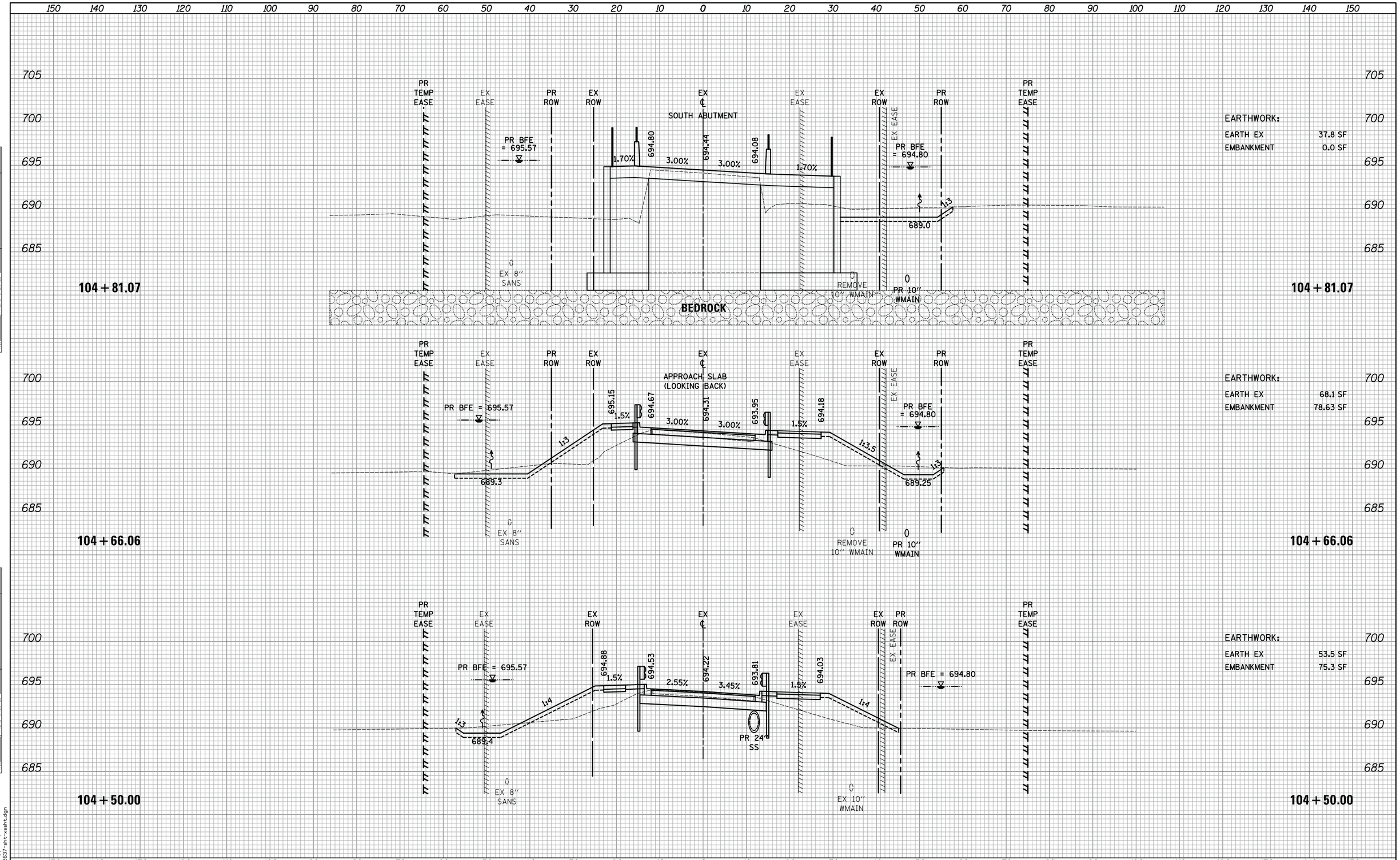

FINAL SURVEY	BY	DATE
NOTE BOOK	SURVEYED	
NO.	PLOTTED	
	TEMPLATE	
	AREAS	
	AREAS CHECKED	

ORIGINAL SURVEY	BY	DATE
NOTE BOOK	SURVEYED	
NO.	PLOTTED	
	TEMPLATE	
	AREAS	
	AREAS CHECKED	

PLOT DRIVER = ...\mjp\dms80314\cen.pdf.plt
PEN TABLE = ...\suppor~1\pentbl\cen.idot_xs.tbl
FILE NAME = ...\2637-sht-xsaht.dgn

CIVILTECH

USER NAME = mjp	DESIGNED - MJP	REVISED -
	DRAWN - MJP	REVISED -
PLOT SCALE = 10.0000 ' / in.	CHECKED - DNM	REVISED -
PLOT DATE = 10/10/2015	DATE - 10/12/15	REVISED -

STATE OF ILLINOIS
DEPARTMENT OF TRANSPORTATION

DEERPATH ROAD OVER MILL CREEK
CROSS SECTIONS – DEERPATH ROAD

SCALE: 1"=10'H/5'V | SHEET OF SHEETS | STA. 104+50.00 TO STA. 104+81.07

F.A.U. RTE.	SECTION	COUNTY	TOTAL SHEETS	SHEET NO.
2327	07-00068-00-BR	KANE	78	71
		CONTRACT NO. 61A88		
		ILLINOIS FED. AID PROJECT		

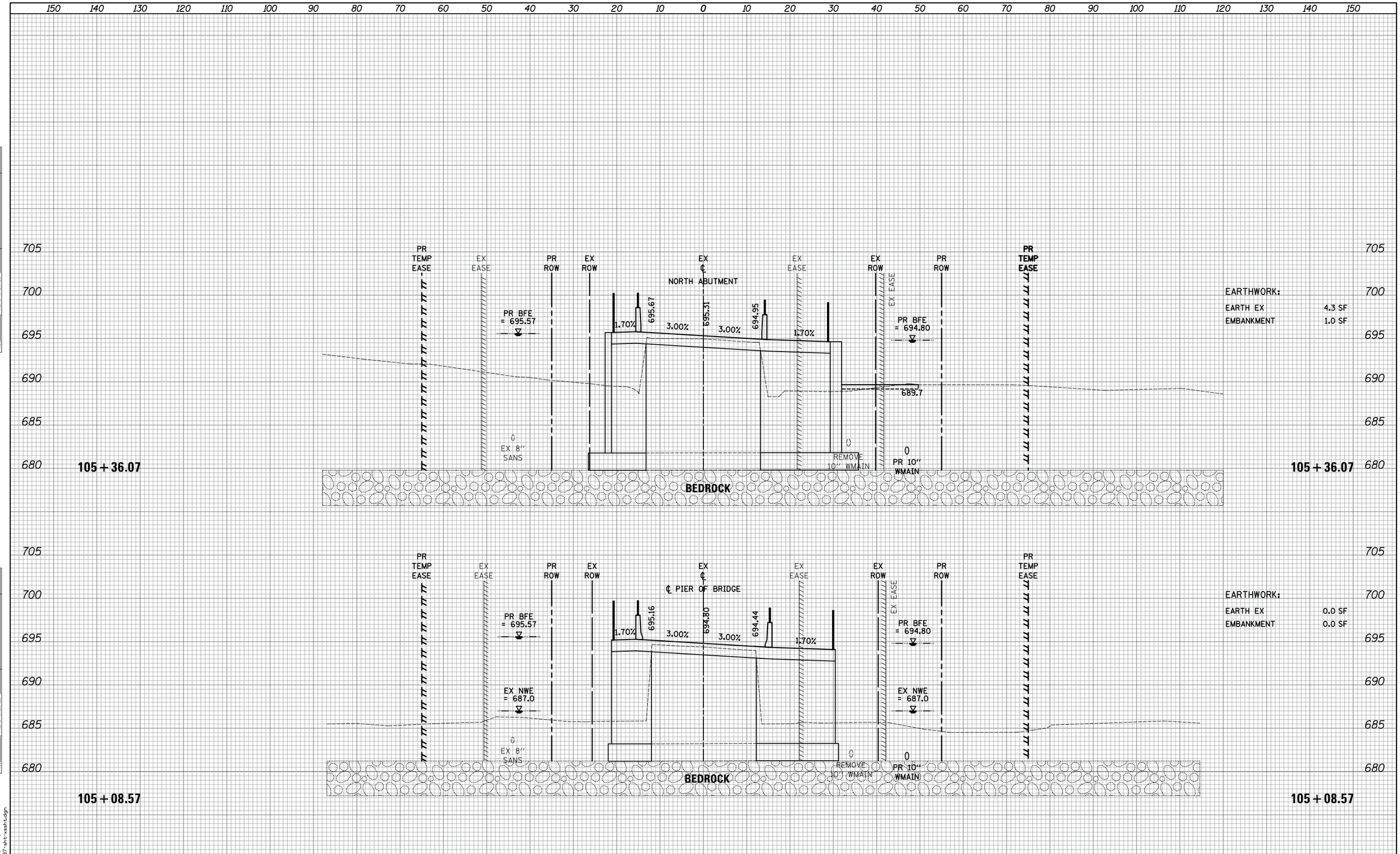

FINAL SURVEY	NOTE BOOK	NO.	SURVEYED	PLOTTED	TEMPLATE	AREAS	AREAS CHECKED	BY	DATE

ORIGINAL SURVEY	NOTE BOOK	NO.	SURVEYED	PLOTTED	TEMPLATE	AREAS	AREAS CHECKED	BY	DATE

PLOT DRIVER = ...\mjp\dms80314\ce1.pdf.plt
PEN TABLE = ...\support\pentbl\ce1.idot.xs.tbl
FILE NAME = ...\2637-sht-xssht.dgn

CIVILTECH

USER NAME = mjp	DESIGNED - MJP	REVISED -
	DRAWN - MJP	REVISED -
PLOT SCALE = 10.0000 ' / in.	CHECKED - DNM	REVISED -
PLOT DATE = 10/10/2015	DATE - 10/12/15	REVISED -

STATE OF ILLINOIS
DEPARTMENT OF TRANSPORTATION

DEERPATH ROAD OVER MILL CREEK
CROSS SECTIONS - DEERPATH ROAD

SCALE: 1"=10'H/5'V | SHEET OF SHEETS | STA. 105+08.57 TO STA. 105+36.07

F.A.U. RTE.	SECTION	COUNTY	TOTAL SHEETS	SHEET NO.
2327	07-00068-00-BR	KANE	78	72

CONTRACT NO. 61A88

ILLINOIS FED. AID PROJECT

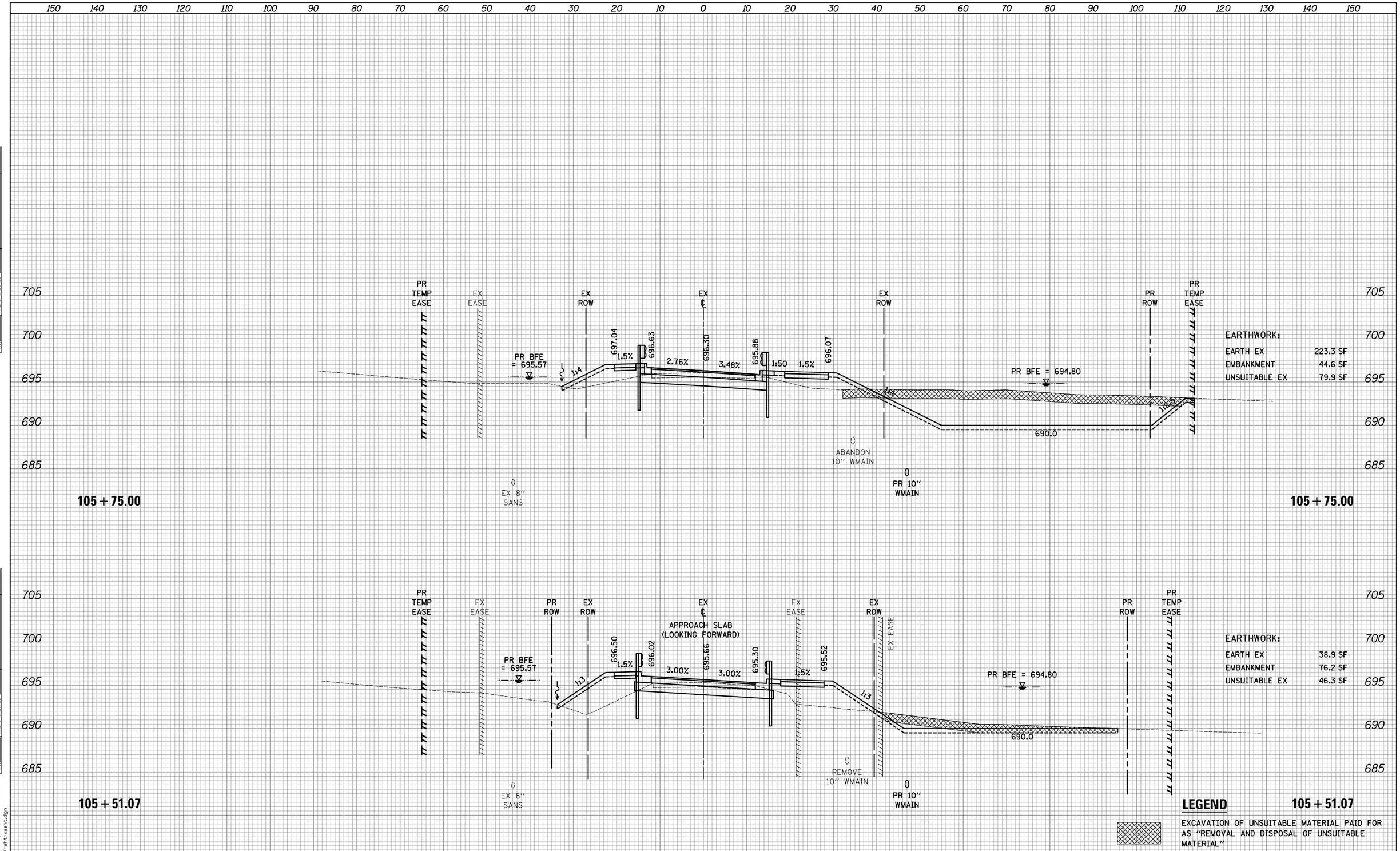

FINAL SURVEY		BY	DATE
NOTE BOOK	SURVEYED		
	PLOTTED		
	TEMPLATE		
	AREAS		
NO.	AREAS CHECKED		

ORIGINAL SURVEY		BY	DATE
NOTE BOOK	SURVEYED		
	PLOTTED		
	TEMPLATE		
	AREAS		
NO.	AREAS CHECKED		

PLOT DRIVER = ...\m_gc\dms80314\cei_pdf.plt
PEN TABLE = ...\support\pentbl\cei_idot_xs.tbl
FILE NAME = ...\2837-sht-xsaht.dgn

CIVILTECH

USER NAME = mjp	DESIGNED - MJP	REVISED -	
	DRAWN - MJP	REVISED -	
PLOT SCALE = 10.0000 ' / in.	CHECKED - DNM	REVISED -	
PLOT DATE = 10/10/2015	DATE - 10/12/15	REVISED -	

STATE OF ILLINOIS
DEPARTMENT OF TRANSPORTATION

DEERPATH ROAD OVER MILL CREEK
CROSS SECTIONS - DEERPATH ROAD

SCALE: 1"=10'H/5'V | SHEET OF SHEETS | STA. 105+51.07 TO STA. 105+75.00

F.A.U. RTE.	SECTION	COUNTY	TOTAL SHEETS	SHEET NO.
2327	07-00068-00-BR	KANE	78	73

CONTRACT NO. 61A88

ILLINOIS FED. AID PROJECT

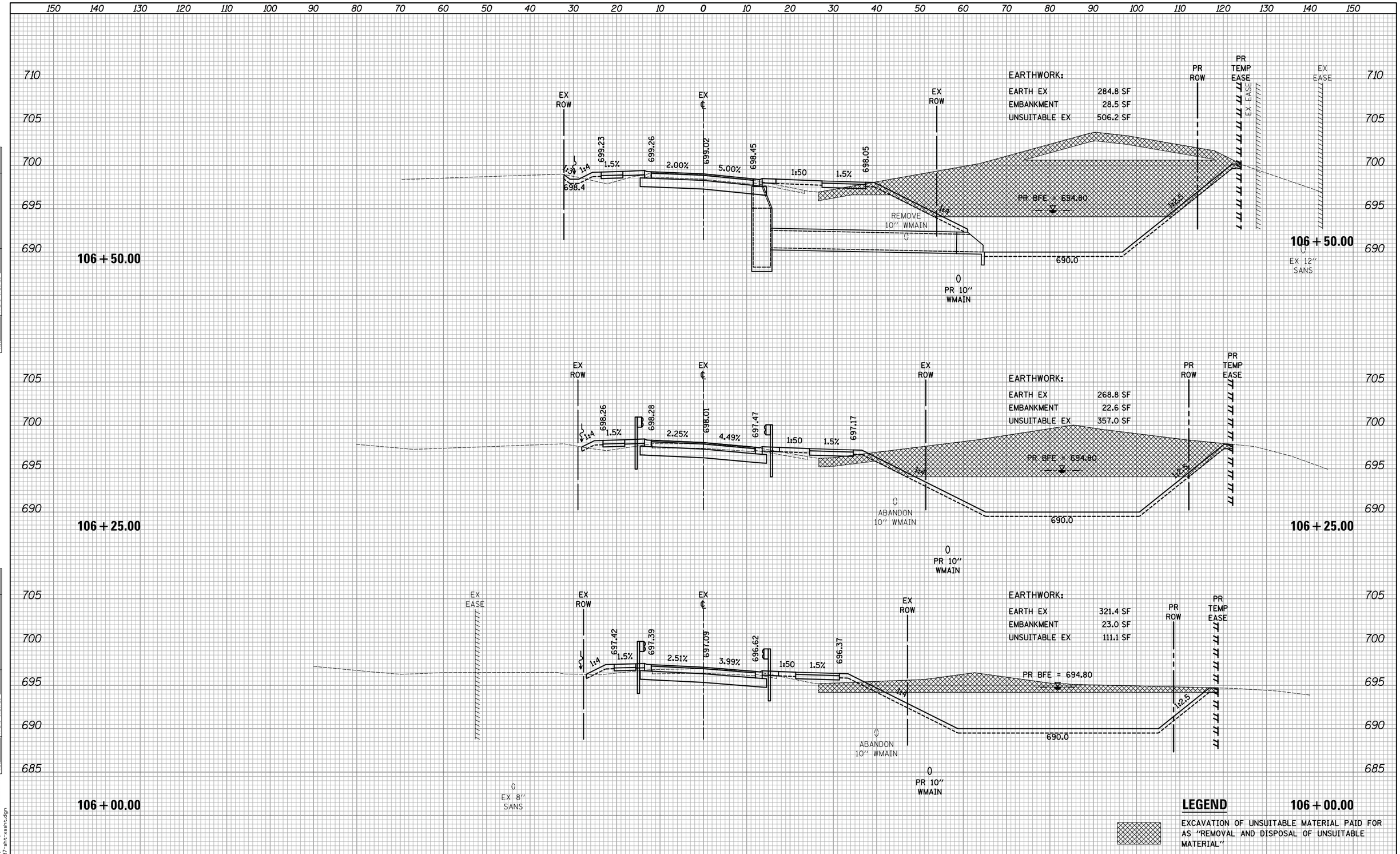

FINAL SURVEY		BY	DATE
NOTE BOOK	SURVEYED		
NO.	PLOTTED		
	TEMPLATE		
	AREAS		
	AREAS CHECKED		

ORIGINAL SURVEY		BY	DATE
NOTE BOOK	SURVEYED		
NO.	PLOTTED		
	TEMPLATE		
	AREAS		
	AREAS CHECKED		

PLOT DRIVER = ...\mjp\dms80314\ce1.pdf.plt
PEN TABLE = ...\support\pentbl\ce1.idot.xs.tbl
FILE NAME = ...\2637-sht-xsskt.dgn

CIVILTECH

USER NAME = mjp	DESIGNED - MJP	REVISED -
	DRAWN - MJP	REVISED -
PLOT SCALE = 10.0000 ' / in.	CHECKED - DNM	REVISED -
PLOT DATE = 10/10/2015	DATE - 10/12/15	REVISED -

STATE OF ILLINOIS
DEPARTMENT OF TRANSPORTATION

DEERPATH ROAD OVER MILL CREEK
CROSS SECTIONS – DEERPATH ROAD

SCALE: 1"=10'H/5'V | SHEET OF SHEETS | STA. 106+00.00 TO STA. 106+50.00

F.A.U. RTE.	SECTION	COUNTY	TOTAL SHEETS	SHEET NO.
2327	07-00068-00-BR	KANE	78	74

CONTRACT NO. 61A88

ILLINOIS FED. AID PROJECT

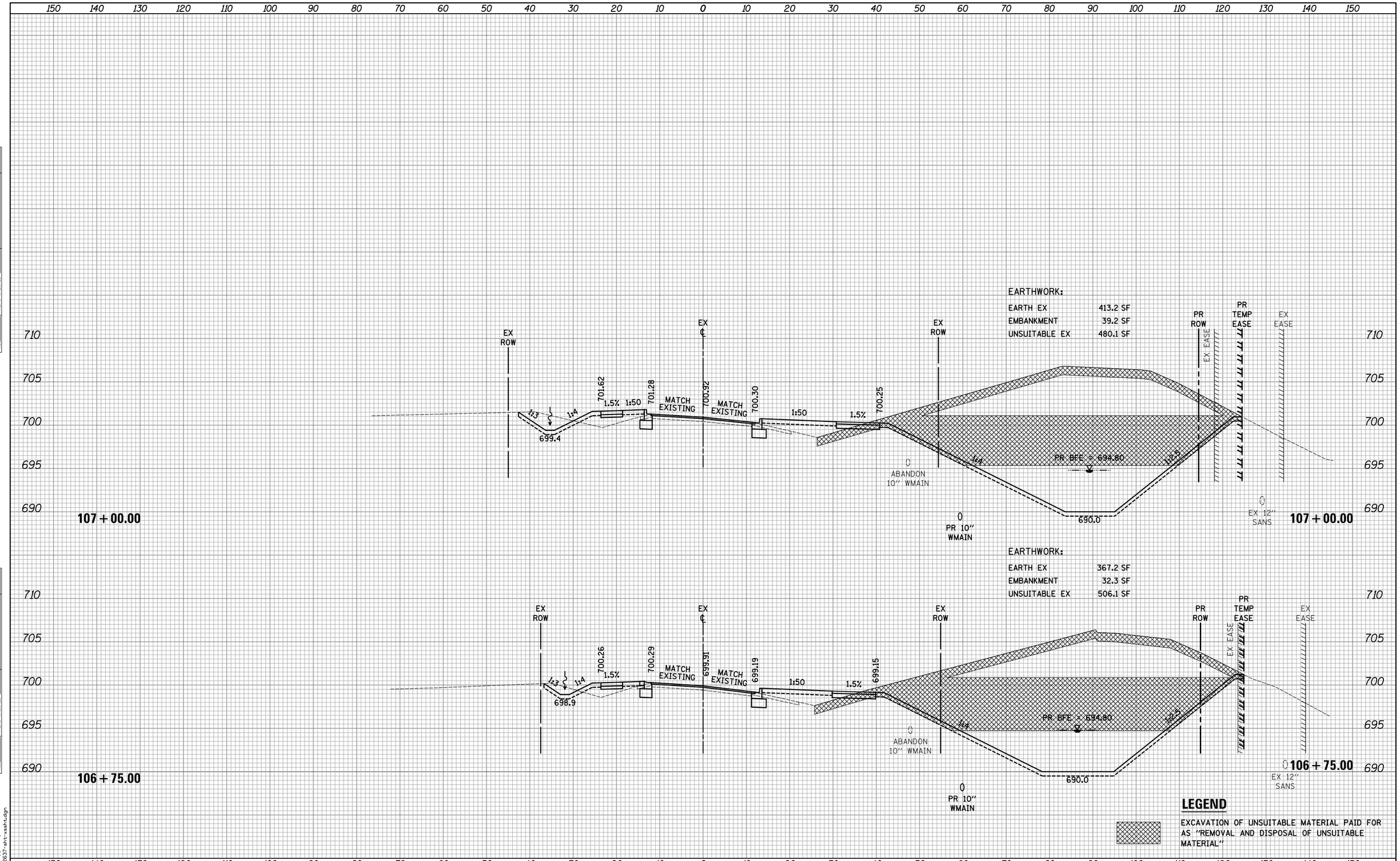

LEGEND

EXCAVATION OF UNSUITABLE MATERIAL PAID FOR AS "REMOVAL AND DISPOSAL OF UNSUITABLE MATERIAL"

FINAL SURVEY	BY	DATE
SURVEYED		
PLOTTED		
TEMPLATE		
AREAS		
AREAS CHECKED		
NOTE BOOK NO.		

ORIGINAL SURVEY	BY	DATE
SURVEYED		
PLOTTED		
TEMPLATE		
AREAS		
AREAS CHECKED		
NOTE BOOK NO.		

PLOT DRIVER = ...\mjp\dms80314\ce1.pdf.plt
PEN TABLE = ...\support\pentbl\ce1.idot_xs.tbl
FILE NAME = ...\2637-sht-xsht.dgn

CIVILTECH

USER NAME = mjp	DESIGNED - MJP	REVISED -
	DRAWN - MJP	REVISED -
PLOT SCALE = 10.0000 ' / in.	CHECKED - DNM	REVISED -
PLOT DATE = 10/10/2015	DATE - 10/12/15	REVISED -

STATE OF ILLINOIS
DEPARTMENT OF TRANSPORTATION

DEERPATH ROAD OVER MILL CREEK
CROSS SECTIONS – DEERPATH ROAD

SCALE: 1"=10'H/5'V | SHEET OF SHEETS | STA. 106+75.00 TO STA. 107+00.00

F.A.U. RTE.	SECTION	COUNTY	TOTAL SHEETS	SHEET NO.
2327	07-00068-00-BR	KANE	78	75

CONTRACT NO. 61A88

ILLINOIS FED. AID PROJECT

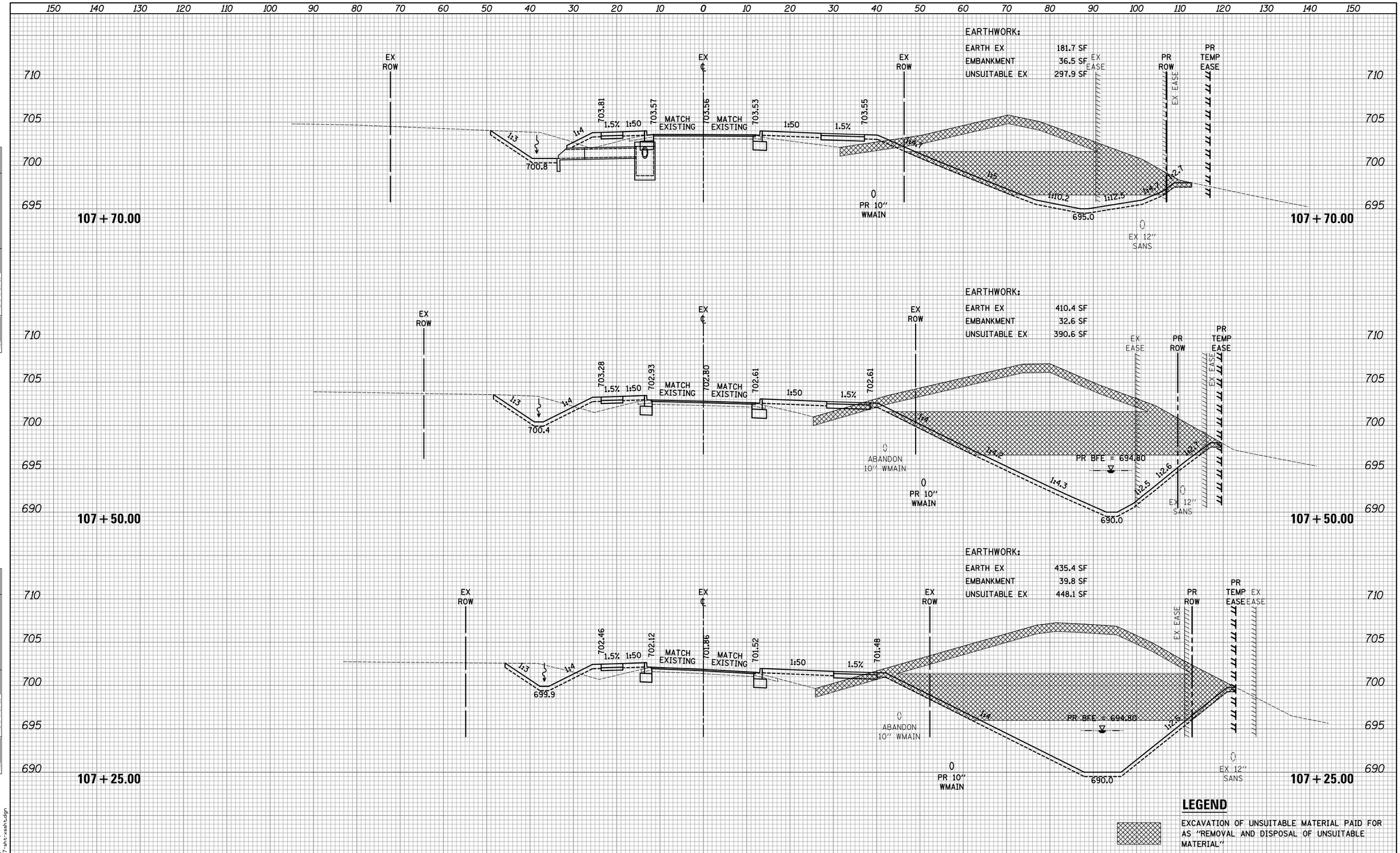

LEGEND

EXCAVATION OF UNSUITABLE MATERIAL PAID FOR AS "REMOVAL AND DISPOSAL OF UNSUITABLE MATERIAL"

FINAL SURVEY		BY	DATE
NOTE BOOK	SURVEYED		
	PLOTTED		
	TEMPLATE		
	AREAS		
NO.	AREAS CHECKED		

ORIGINAL SURVEY		BY	DATE
NOTE BOOK	SURVEYED		
	PLOTTED		
	TEMPLATE		
	AREAS		
NO.	AREAS CHECKED		

PLOT DRIVER = ...\mjp\dms60314\ceu.pdf.plt
PEN TABLE = ...\suppor\pentbl\ceu.idot.xs.tbl
FILE NAME = ...\2637-sht-xsht.dgn

CIVILTECH

USER NAME = mjp	DESIGNED - MJP	REVISED -	
	DRAWN - MJP	REVISED -	
PLOT SCALE = 10.0000 ' / in.	CHECKED - DNM	REVISED -	
PLOT DATE = 10/10/2015	DATE - 10/12/15	REVISED -	

STATE OF ILLINOIS
DEPARTMENT OF TRANSPORTATION

DEERPATH ROAD OVER MILL CREEK
CROSS SECTIONS - DEERPATH ROAD

SCALE: 1"=10'H/5'V | SHEET OF SHEETS | STA. 107+25.00 TO STA. 107+70.00

F.A.U. RTE.	SECTION	COUNTY	TOTAL SHEETS	SHEET NO.
2327	07-00068-00-BR	KANE	78	76
		CONTRACT NO. 61A88		
		ILLINOIS FED. AID PROJECT		

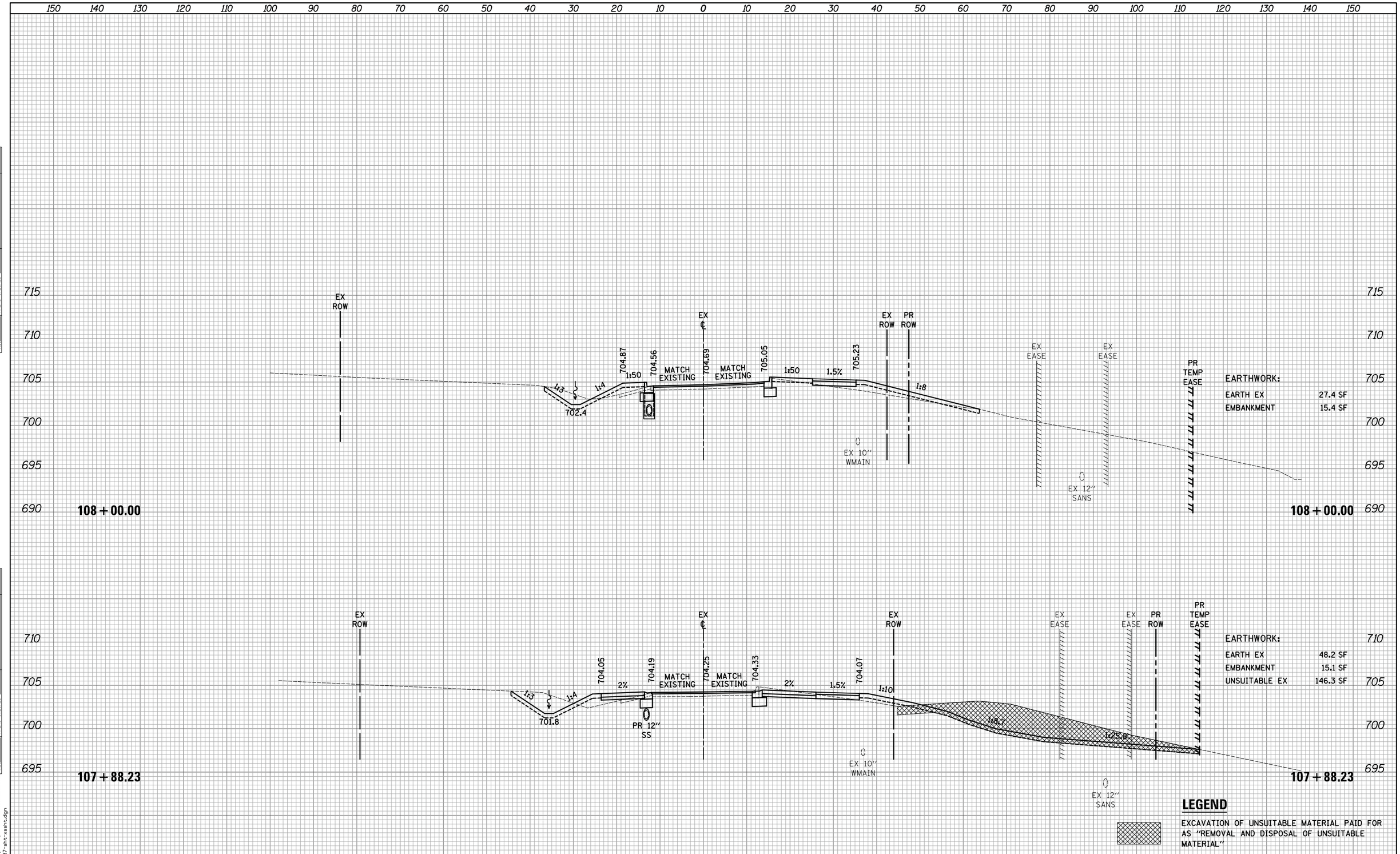

FINAL SURVEY		BY	DATE
NOTE BOOK	SURVEYED		
	PLOTTED		
	TEMPLATE		
	AREAS		
NO.	AREAS CHECKED		

ORIGINAL SURVEY		BY	DATE
NOTE BOOK	SURVEYED		
	PLOTTED		
	TEMPLATE		
	AREAS		
NO.	AREAS CHECKED		

PLOT DRIVER = ...\mjp\dms80314\ceu_pdf.plt
PEN TABLE = ...\support\pentbl\ceu_idot_xs.tbl
FILE NAME = ...\2637-sht-xsht.dgn

CIVILTECH

USER NAME = mjp	DESIGNED - MJP	REVISED -	
	DRAWN - MJP	REVISED -	
PLOT SCALE = 10.0000 ' / in.	CHECKED - DNM	REVISED -	
PLOT DATE = 10/10/2015	DATE - 10/12/15	REVISED -	

STATE OF ILLINOIS
DEPARTMENT OF TRANSPORTATION

DEERPATH ROAD OVER MILL CREEK
CROSS SECTIONS - DEERPATH ROAD

SCALE: 1"=10'H/5'V | SHEET OF SHEETS | STA. 107+88.23 TO STA. 108+00.00

F.A.U. RTE.	SECTION	COUNTY	TOTAL SHEETS	SHEET NO.
2327	07-00068-00-BR	KANE	78	77
		CONTRACT NO. 61A88		
		ILLINOIS FED. AID PROJECT		

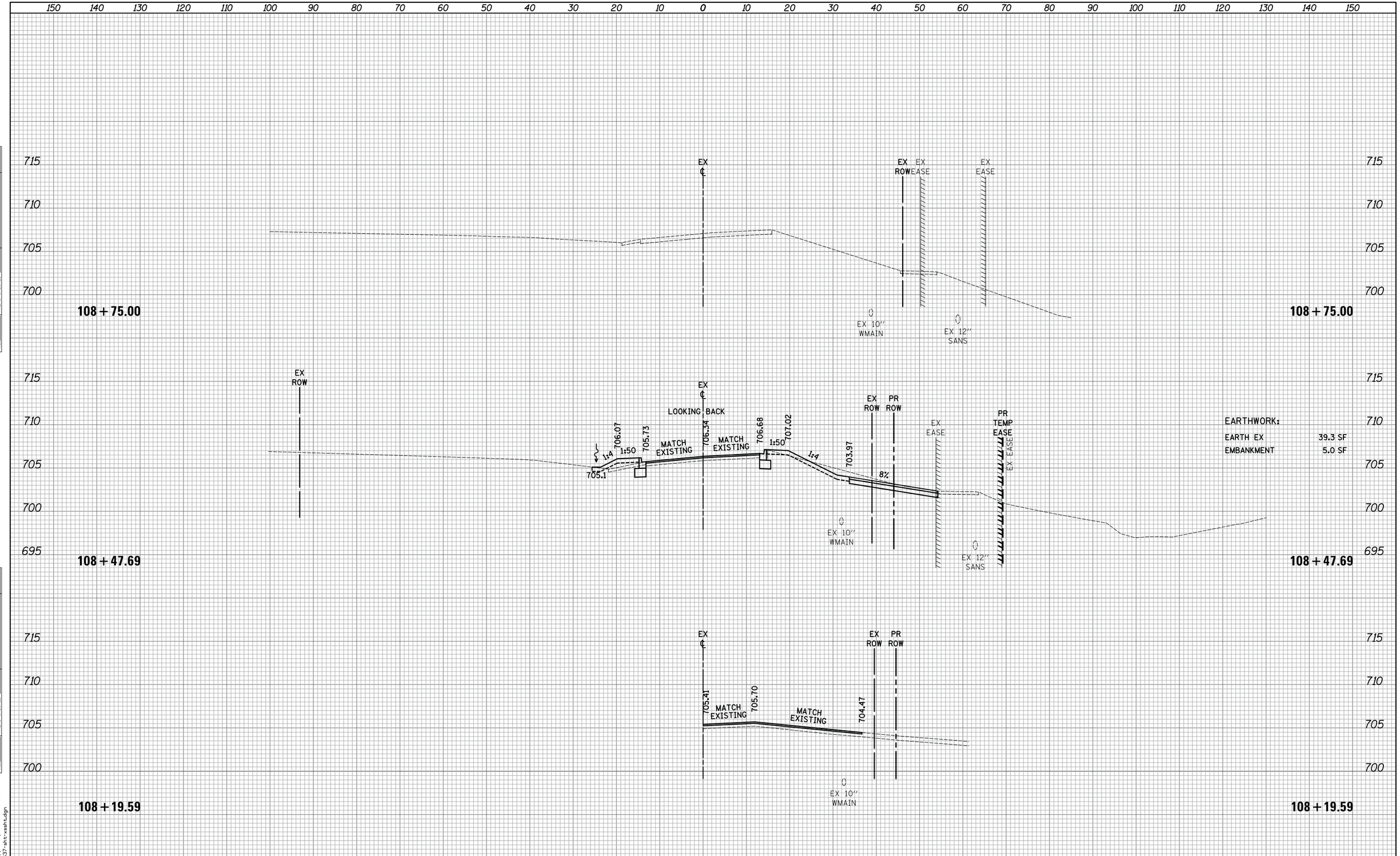

FINAL SURVEY		BY	DATE
NOTE BOOK	SURVEYED		
	PLOTTED		
	TEMPLATE		
	AREAS		
NO.	AREAS CHECKED		

ORIGINAL SURVEY		BY	DATE
NOTE BOOK	SURVEYED		
	PLOTTED		
	TEMPLATE		
	AREAS		
NO.	AREAS CHECKED		

PLOT DRIVER = ...\m_jp\dms80314\cei_pdf.plt
PEN TABLE = ...\suppor~1\pentbl\cei_idot_xs.tbl
FILE NAME = ...\2637-sht-xsaht.dgn

CIVILTECH

USER NAME = mjp	DESIGNED - MJP	REVISED -
	DRAWN - MJP	REVISED -
PLOT SCALE = 10.0000 ' / in.	CHECKED - DNM	REVISED -
PLOT DATE = 10/10/2015	DATE - 10/12/15	REVISED -

STATE OF ILLINOIS
DEPARTMENT OF TRANSPORTATION

DEERPATH ROAD OVER MILL CREEK
CROSS SECTIONS - DEERPATH ROAD

SCALE: 1"=10'H/5'V | SHEET OF SHEETS | STA. 108+19.59 TO STA. 108+75.00

F.A.U. RTE.	SECTION	COUNTY	TOTAL SHEETS	SHEET NO.
2327	07-00068-00-BR	KANE	78	78
		CONTRACT NO. 61A88		
		ILLINOIS FED. AID PROJECT		